SYCAMORE CREEK PARK POND ENHANCEMENT

AUGUST 2026

PROJECT LOCATION

500 HEREFORD DR
PICKERINGTON
FAIRFIELD COUNTY, OH

PROJECT DESCRIPTION

THE PURPOSE OF THIS PROJECT IS TO ENHANCE THE EXISTING 2.18 ACRE POND BY INCREASING ITS DEPTH BY 6 FEET FOR GREATER FISH SURVIVABILITY, MITIGATING AREAS OF EROSION THROUGH GRADING AND RIPRAP PLACEMENT, IMPROVING HABITAT VALUE BY ADDING A WETLAND FRINGE WITH NATIVE VEGETATION, AND IMPROVING VISITOR SAFETY AND ACCESS BY ADDING A PIER AND STEPPING STONES AROUND THE POND PERIMETER.

CONSTRUCTION START DATE: SEPTEMBER 2026

CONSTRUCTION END DATE: DECEMBER 2026

PLANTING: COMPLETED BY MAY 31, 2027

PROJECT CONTACTS

PROJECT OWNER:	CITY OF PICKERINGTON 100 LOCKVILLE RD PICKERINGTON, OH 43147
DESIGNER:	MAD SCIENTIST ASSOCIATES, LLC 253 NORTH STATE STREET, SUITE 101 WESTERVILLE, OH 43081 614-818-9156
CONSTRUCTION CONTRACTOR:	TBD

Ohio Utilities Protection Service
Call 811 before you dig

PROJECT MAP

SCALE: 1 IN = 200 FT

INDEX OF SHEETS

Sheet Number	Sheet Title
01	COVER SHEET
02	GENERAL NOTES
03	EXISTING CONDITIONS
04	GRADING PLAN PHASE 1
05	GRADING PLAN PHASE 2
06	CROSS SECTIONS
07	PLANTING AND SEEDING PLAN
08	PLANTING SCHEDULE AND DETAILS
09	SWPPP EXISTING CONDITIONS
10	SWPPP CONSTRUCTION MANAGEMENT
11	SWPPP DETAILS
12	POND EDGE DETAILS
13	CULVERT DETAILS
14	CULVERT PROFILES

OHIO DEPARTMENT OF TRANSPORTATION STANDARD CONSTRUCTION DRAWINGS*	
BP-3.1	ASPHALT PAVING
DM-4.4	CONSTRUCTION EROSION CONTROL

*THE STANDARD DRAWINGS LISTED ON THESE PLANS SHALL BE CONSIDERED A PART THEREOF

SHEET SET COMPLETION STATUS

NOT FOR CONSTRUCTION

PREPARED BY
MAD SCIENTIST ASSOCIATES LLC

PREPARED FOR
PICKERINGTON OHIO 1812

SYCAMORE CREEK PARK POND ENHANCEMENT

500 HEREFORD DR
PICKERINGTON
FAIRFIELD COUNTY, OH

REVISIONS

#	DATE	DESCRIPTION	INIT

DATE
AUGUST 10, 2026

DRAWN BY
RBK / LMS

CHECKED BY
LMS / MAD

SHEET TITLE
COVER SHEET

SHEET NUMBER
01 / 14

GENERAL CONSTRUCTION NOTES

1. CONTRACTOR WILL NOTIFY OHIO UTILITY PROTECTION SERVICE (OHIO 811) TO VERIFY LOCATION OF UNDERGROUND UTILITIES BEFORE EXCAVATION BEGINS. THE CONTRACTOR SHALL BE RESPONSIBLE FOR ASSURING THAT UTILITY MARKING IS COMPLETE BEFORE EXCAVATION BEGINS. THE CONTRACTOR SHALL BE RESPONSIBLE FOR ALL DAMAGE RESULTING FROM NEGLECT OR FAILURE TO COMPLY WITH THIS REQUIREMENT.

2. IF THE CONTRACTOR FINDS ANY SIGNIFICANT DISCREPANCY BETWEEN THESE CONSTRUCTION DRAWINGS AND ACTUAL FIELD CONDITIONS, THE OWNER OR ENGINEER SHALL BE NOTIFIED IMMEDIATELY. CONTRACTOR SHALL CONTACT THE OWNER OR ENGINEER BEFORE MAKING ANY DEVIATIONS FROM THE PROJECT DRAWINGS GREATER THAN SPECIFIED CONSTRUCTION TOLERANCES.

3. EXISTING TOPOGRAPHY ON THESE PROJECT DRAWINGS HAS BEEN GENERATED FROM A FIELD TOPOGRAPHIC SURVEY PERFORMED IN JAN 2026 BY AMERICAN STRUCTUREPOINT INC. AND BATHYMETRIC DATA COLLECTED IN AUG 2025 BY MAD SCIENTIST ASSOCIATES, LLC.

4. CONTRACTOR SHALL PERFORM ALL CONSTRUCTION ACTIVITY IN COMPLIANCE WITH OSHA STANDARDS FOR SAFETY.

5. HORIZONTAL AND VERTICAL CONTROL COORDINATES ARE PROVIDED ON THE CONSTRUCTION DRAWINGS. CONTRACTOR SHALL UTILIZE A STATE OF OHIO REGISTERED SURVEYOR FOR ALL NECESSARY CONSTRUCTION LAYOUT AND STAKING. SURVEYOR SHALL BE CAPABLE OF WORKING WITH ELECTRONIC CAD FILES IN ORDER TO COMPLETE NECESSARY LAYOUT AND STAKING. AS NECESSARY, OWNER OR ENGINEER MAY FIELD CHECK THE HORIZONTAL AND VERTICAL LOCATION OF COMPLETED CONSTRUCTION. ENGINEER WILL PROVIDE AWARDED CONTRACTOR WITH THE CAD FILES FOR THE PROJECT.

6. CONTRACTOR SHALL POWER-WASH ALL EQUIPMENT AT AN OFF-SITE LOCATION PRIOR TO MOBILIZATION TO THE SITE TO PREVENT THE INTRODUCTION AND/OR SPREAD OF INVASIVE PLANT SPECIES.

7. LEVELING INSTRUMENT, SURVEY ROD, AND A SKILLED INSTRUMENT PERSON SHALL BE MAINTAINED ON-SITE BY CONTRACTOR DURING WORK HOURS AND SHALL BE MADE AVAILABLE TO OWNER AND ENGINEER FOR CONDUCTING GRADE CHECKS AS NECESSARY.

8. ANY COMPLETED CONSTRUCTION THAT IS FOUND TO BE IN NON-CONFORMANCE WITH THE ELEVATIONS AND LOCATIONS SHOWN ON THE PROJECT DRAWING WILL BE CORRECTED BY CONTRACTOR AT NO ADDITIONAL COST TO OWNER UNLESS SUCH DEVIATIONS ARE APPROVED, IN ADVANCE, BY THE OWNER AND ENGINEER.

9. ALL SPOILS, WOODY DEBRIS, STUMPS, TRASH, AND ITEMS ENCOUNTERED, REMOVED, OR DEMOLISHED DURING CONSTRUCTION SHALL BE REMOVED AT CONTRACTOR'S EXPENSE OR AS SPECIFICALLY APPROVED, IN WRITING, BY OWNER OR OWNER'S REPRESENTATIVE.

10. CONTRACTOR IS RESPONSIBLE FOR THE PROPER DISPOSAL AND MANAGEMENT OF ALL WASTES AND UNUSED CONSTRUCTION MATERIALS. CONTRACTOR SHALL COMPLY WITH ALL STATE OR LOCAL REGULATIONS REGARDING WASTE MANAGEMENT AND DISPOSAL.

11. CONTRACTOR MAY UTILIZE TEMPORARY STORAGE AREAS WITHIN WORK LIMITS FOR THE PURPOSES OF STORAGE OF EQUIPMENT AND MATERIALS. ANY OTHER LOCATIONS THAT THE CONTRACTOR WISHES TO USE FOR STORAGE MUST BE APPROVED, IN ADVANCE, BY OWNER'S REPRESENTATIVE.

12. CONTRACTOR SHALL MAINTAIN AND PROVIDE THE OWNER WITH RECORD DRAWINGS INDICATING ANY CHANGES, REVISIONS, ADDITIONS, OR DELETIONS TO PROPOSED IMPROVEMENTS. RECORD DRAWINGS SHALL ALSO INCLUDE SURVEYED CERTIFICATION POINTS AS SHOWN ON THE DRAWINGS. CERTIFICATION POINTS SHALL BE MEASURED AND REPORTED TO OWNER IMMEDIATELY FOLLOWING ACHIEVEMENT OF FINAL GRADE TO VERIFY COMPLIANCE WITH THE DRAWINGS. FINAL PAYMENT WILL NOT BE MADE UNTIL SATISFACTORY RECORD DRAWINGS ARE PROVIDED TO THE OWNER.

13. ALL AREAS TEMPORARILY DISTURBED DURING CONSTRUCTION SHALL BE RESTORED TO THEIR ORIGINAL CONDITION UNLESS NOTED OTHERWISE ON THE DRAWINGS. ALL SIGNS, FENCES, DRAINAGE STRUCTURES, LANDSCAPING, CURBING AND PAVEMENT SURFACES, ETC., DISTURBED DURING THE CONSTRUCTION OF THIS PROJECT, SHALL BE RESTORED BY THE CONTRACTOR TO EQUAL OR BETTER CONDITION THAN EXISTED BEFORE CONSTRUCTION. DRAINAGE DITCHES OR WATERCOURSES THAT ARE DISTURBED BY CONSTRUCTION SHALL BE RESTORED TO THE GRADES AND CROSS-SECTIONS THAT EXISTED BEFORE CONSTRUCTION, UNLESS OTHERWISE SPECIFIED IN THE PLAN DRAWINGS.

GENERAL WETLAND CONSTRUCTION SEQUENCE

1. MOBILIZE;

2. INSTALL EROSION AND SEDIMENT CONTROLS;

3. CONSTRUCT TEMPORARY STAGING AREA AND CONSTRUCTION FENCE;

4. SITE LAYOUT; CONTRACTOR SHALL NOT BEGIN ANY SITE GRADING UNTIL ENGINEER HAS APPROVED IN THE FIELD; CONSTRUCTION ACTIVITIES SHALL BE SCHEDULED SUCH THAT A MINIMUM AREA OF THE SITE IS DISTURBED AT A TIME; AREAS THAT DO NOT HAVE GRADING ARE NOT TO BE DISTURBED TO PRESERVE THE NATURAL VEGETATION;

5. REMOVE TREES THAT ARE DESIGNATED FOR REMOVAL AFTER APPROVAL IN THE FIELD BY OWNER OR OWNER'S REPRESENTATIVE;

6. PHASE 1 (SHEET 4); CONTRACTOR SHALL START WITH PARTIAL OF THE POND THROUGH THE EXISTING OUTLET STRUCTURE; THIS SHALL OCCUR BEFORE EXCAVATION; CONTRACTOR SHALL EXCAVATE ALONG THE EAST BANK AND WITHIN SOUTHEAST LOBE OF THE POND, AND SHALL USE SPOILS TO CONSTRUCT AN EARTHEN COFFERDAM. COFFERDAM WILL REMAIN IN PLACE AND BE BUILT UPON IN PHASE 2. THE SMALLER POOL CREATED BY THE COFFERDAM SHALL BE FILLED WITH WATER PUMPED FROM THE MAIN POND PRIOR TO WILDLIFE RELOCATION; PHASE 2 GRADING SHALL NOT OCCUR UNTIL WILDLIFE RELOCATION AND POND DRAINING HAS OCCURRED;

7. WILDLIFE RELOCATION SHALL BE PERFORMED BY MAD SCIENTIST ASSOCIATES LLC.

8. THE POND SHALL BE FULLY DRAINED, WITH THE EXCEPTION OF THE POOL MAINTAINED BY THE COFFERDAM.

9. STRIP ASPHALT PATHS WHERE SHOWN (SHEET 4) AND REMOVE WOODEN RAILINGS WHERE INDICATED;

10. PHASE 2 (SHEET 5); GRADE POND INTERIOR TO DESIGN ELEVATIONS; USE SPOILS FROM POND EXCAVATION TO BUILD UP MOUNDS AND POND BANKS AS PER DESIGN;

11. REMOVE EXISTING CULVERT ON SOUTHWEST END OF POND AND INSTALL ALL NEW CULVERT PIPES AND HEADWALLS; CREATE NEW SECTIONS OF ASPHALT PATHS;

12. NEW ELECTRIC LINE SHALL BE INSTALLED AND RUN UNDERGROUND FROM EXISTING LIGHT POLE TO PARK SHELTER (SHEET 5); ELECTRICAL OUTLET BOX SHALL BE INSTALLED ON SOUTHEAST CORNER OF SHELTER;

13. ONCE PHASE 2 GRADING IS COMPLETE, CONTRACTOR SHALL HAVE A GEOTECHNICAL SURVEY COMPLETED BELOW THE LOCATION OF THE PROPOSED PIER; BORINGS SHALL BE TAKEN AFTER EXCAVATING TO SUBGRADE BELOW THE PROPOSED FOUNDATION LOCATIONS;

14. CONTRACTOR SHALL ORDER PIER COMPONENTS AS SHOWN IN DRAWINGS FROM PERMATRAK (OR EQUIVALENT); CONTRACTOR SHALL CONSTRUCT PIER FOUNDATIONS; CONTRACTOR SHALL INSPECT AND REPAIR (IF NEEDED) THE POND LINER AFTER THE FOUNDATIONS FOR THE BOARDWALK ARE IN PLACE; CONSTRUCT THE PIER PLATFORM AND RAILINGS;

15. APPLY IMPORTED TOPSOIL ACROSS ALL AREAS OF SPOILS ABOVE THE NORMAL POOL OF THE POND, ACHIEVING NO LESS THAN 4 INCHES OF TOPSOIL DEPTH ABOVE FINISHED GRADE;

16. APPLY TEMPORARY SEED ACROSS ALL AREAS OF TOPSOIL APPLICATION AND ANY DISTURBED AREAS;

17. INSTALL KASCO FOUNTAIN AND AERATOR (SHEET 5, SPECS INCLUDED)

18. UPON ACHIEVEMENT OF FINAL STABILIZATION, REMOVE EROSION AND SEDIMENT CONTROLS, CONSTRUCTION STAGING AREA AND CONSTRUCTION FENCE;

19. DEMOBILIZE

PERMITS AND COMPLIANCE

1. CONTRACTOR SHALL COMPLY WITH ALL CONDITIONS OF THE OHIO EPA NPDES GENERAL CONSTRUCTION PERMIT AND THE STORMWATER POLLUTION PREVENTION PLAN (SWPPP) THAT HAS BEEN DEVELOPED FOR THIS PROJECT. CONTRACTOR SHALL MAINTAIN A HARD-COPY OF THE GENERAL STORMWATER PERMIT AND SWPPP ON-SITE THROUGHOUT THE DURATION OF CONSTRUCTION (SWPPP INCLUDED SHEETS 9-11).

2. SOIL AND OTHER FILL MATERIALS SHALL NOT BE STORED NEXT TO OR WITHIN THE DRIP-LINE OF TREES.

3. ALL TREES AND SHRUBS OUTSIDE OF THE WORK LIMITS OR AREA OF DISTURBANCE SHALL BE AVOIDED UNLESS NOTED OTHERWISE ON THE DRAWINGS. TREES AND SHRUBS WITHIN THE AREA OF DISTURBANCE SHALL BE AVOIDED TO THE MAXIMUM EXTENT PRACTICABLE.

4. CUTTING OF TREES GREATER THAN OR EQUAL TO 3 INCHES IN DBH SHALL OCCUR BETWEEN OCTOBER 1 AND MARCH 31 AND IN PRESENCE OF ENGINEER OR OWNER.

UTILITY NOTES

1. EXISTING UTILITIES ARE SHOWN ON THE PROJECT DRAWINGS IN THEIR APPROXIMATE LOCATIONS BASED ON INFORMATION OBTAINED FROM UTILITY OWNERS DURING DESIGN. NO RESPONSIBILITY IS ASSUMED BY THE OWNER OR ENGINEER FOR THE ACCURACY OR COMPLETENESS OF UTILITY LOCATION INFORMATION. UTILITY LOCATIONS ARE INTENDED TO ONLY SERVE AS A GUIDE AND CANNOT BE GUARANTEED TO BE ACCURATE OR COMPLETE.

2. CONTRACTOR SHALL VERIFY THE LOCATIONS AND ELEVATIONS OF ALL EXISTING UTILITIES PRIOR TO CONSTRUCTION. DURING CONSTRUCTION, THE CONTRACTOR SHALL PROTECT FROM DAMAGE AND SUPPORT ALL EXISTING UTILITIES, WHETHER SHOWN ON THE CONSTRUCTION DRAWINGS OR NOT. THE CONTRACTOR SHALL BE RESPONSIBLE FOR:

a. CONTACTING THE OHIO UTILITIES PROTECTION SERVICE (OHIO 811) AT 1-800-362-2764 BETWEEN 48 HOURS AND 10 DAYS PRIOR TO BREAKING GROUND.

b. POTHOLING AND VERIFYING THE HORIZONTAL AND VERTICAL LOCATION OF EACH UTILITY IN THE WORK LIMITS BEFORE STARTING CONSTRUCTION.

c. ALL EXISTING INLET PIPES FLOWING TO POND (EXCEPT 21 INCH CULVERT ON SOUTHWEST CORNER) SHALL BE PRESERVED;

d. RESTORING AND REPAIRING ALL EXISTING UTILITIES, WHETHER SHOWN OR NOT, THAT ARE DISTURBED OR DAMAGED THROUGH THE CONTRACTOR'S ACTIONS. ALL RESTORATION AND REPAIR ACTIVITIES SHALL BE COORDINATED WITH THE UTILITY OWNER AND SHALL BE PERFORMED TO OWNER AND UTILITY OWNER'S SATISFACTION AT CONTRACTOR'S EXPENSE.

3. WHERE POTENTIAL CONFLICTS MAY OCCUR BETWEEN PROPOSED CONSTRUCTION AND UTILITIES, CONTRACTOR SHALL UNCOVER SUCH UTILITIES SUFFICIENTLY IN ADVANCE OF CONSTRUCTION IN ORDER THAT EXACT ELEVATIONS MAY BE DETERMINED AND THE NECESSARY ADJUSTMENTS MADE. IF ANY REQUIRED ADJUSTMENTS ARE BEYOND REASONABLE CONSTRUCTION TOLERANCES, CONTRACTOR SHALL CONTACT OWNER BEFORE PROCEEDING WITH THAT WORK.

4. THE FOLLOWING ARE KNOWN OWNERS OF UTILITIES IN THE PROJECT AREA. CONTRACTOR SHALL BE RESPONSIBLE FOR DIRECTLY COORDINATING WITH UTILITY OWNERS, AS NECESSARY:

a. ELECTRIC: SOUTH CENTRAL POWER COMPANY (800) 282-5064

b. SANITARY SEWER: CITY OF PICKERINGTON UTILITIES DEPT. (614) 833-2289

DO NOT INTERRUPT EXISTING UTILITY SERVICE UNLESS PERMITTED (IN WRITING) BY OWNER AND UTILITY OWNER. IF AN UNCHARTED OR IMPROPERLY LOCATED UTILITY IS ENCOUNTERED DURING CONSTRUCTION, CONTRACTOR SHALL CONSULT THE OWNER AND UTILITY OWNER IMMEDIATELY. CONTRACTOR SHALL COOPERATE WITH OWNER AND UTILITY OWNER TO MAINTAIN UTILITY SERVICE.

QUALITY ASSURANCE, QUALITY CONTROL, AND OWNER OVERSIGHT

1. FIELD OBSERVATIONS/CONSTRUCTION OVERSIGHT WILL BE CONDUCTED BY MAD. CONTRACTOR SHALL COORDINATE WITH MAD FOR EVALUATION OF ALL GRADING ACTIVITIES.

2. THE OWNER OR OWNER'S REPRESENTATIVE SHALL DETERMINE THE ACCEPTABILITY OF ALL CONSTRUCTION AND ITS PROCEDURES. THERE WILL BE REGULAR AND FREQUENT REVIEW OF ALL MATERIALS, CONSTRUCTON PRACTICES, AND THE QUALITY AND QUANTITY OF ALL PHASES OF CONSTRUCTION. THE OWNER OR OWNER'S REPRESENTATIVE SHALL HAVE AUTHORITY TO REQUEST ADJUSTMENTS AS MAY BE NECESSARY TO BEST MEET THE RESTORATION OBJECTIVES. EVALUATION OF CONSTRUCTED GRADES WILL DETERMINE APPROVAL. ALL RESTORATION ELEMENTS SHALL NOT BE CONSIDERED COMPLETE UNTIL APPROVED BY THE OWNER OR OWNER'S REPRESENTATIVE.

3. THE CONTRACTOR SHALL PRESERVE ALL CORNERSTONES, IRON PINS, AND CONCRETE MONUMENTS, OR ANY TYPE OF LAND MONUMENT. THE CONTRACTOR SHALL HAVE ALL MONUMENTS IN THE PROXIMITY OF THE WORK REFERENCED. THE CONTRACTOR SHALL REPLACE DESTROYED OR DAMAGED MONUMENTS AND SHALL FURNISH A CERTIFICATION BY A REGISTERED SURVEYOR THAT THE MONUMENTS HAVE BEEN RESTORED.

SOIL AND VEGETATION MANAGEMENT

1. SUGGESTED EQUIPMENT ACCESS ROUTES ARE SHOWN ON SHEET 10. THE ACTUAL ACCESS ROUTES SHALL BE DETERMINED BY CONTRACTOR, BASED ON SITE FIELD CONDITIONS, TO MINIMIZE DISTURBANCE AND COMPACTION OF SITE SOIL. IT IS EXPECTED THAT THE ACCESS ROUTES WILL PRIMARILY BE LOCATED IN UPLAND AREAS.

2. TO LIMIT DISTURBANCE, THE CONTRACTOR WILL CONFINE OPERATIONS TO AREA IMMEDIATELY ASSOCIATED WITH IMPROVEMENTS. WORK SHALL BE LIMITED TO THE WORK LIMITS SHOWN ON THE DRAWINGS.

3. CHOOSE EQUIPMENT TO MINIMIZE SOIL COMPACTION.

4. CONTRACTOR SHALL PROTECT ALL EXISTING VEGETATION, WHETHER SHOWN OR NOT SHOWN ON THE PLANS, WITHIN AND BEYOND THE WORK LIMITS, THAT IS NOT NOTED TO BE REMOVED. THE CONTRACTOR SHALL USE EXTREME CAUTION WHEN WORKING AROUND EXISTING TREES AND SHRUBS. KEEP AREA CLEAR OF BUILDING MATERIALS, WASTE, AND EXCESS SOIL. OPERATORS SHALL KEEP HEAVY MACHINERY OUTSIDE OF THE DRIPLINES OF WOODY VEGETATION. NO DIGGING, TRENCHING, OR OTHER SOIL DISTURBANCE SHALL BE ALLOWED WITHIN THE DRIPLINES UNLESS APPROVED BY THE OWNER OR ENGINEER. TREES DAMAGED OR DESTROYED THAT WERE NOT DESIGNATED FOR REMOVAL OR APPROVED BY THE OWNER OR OWNER'S REPRESENTATIVE FOR REMOVAL SHALL BE REPLACED AT THE CONTRACTOR'S EXPENSE. IF SUITABLE REPLACEMENT CANNOT BE DETERMINED, COMPENSATION BY THE CONTRACTOR FOR UNAUTHORIZED TREE REMOVAL SHALL INCLUDE COMPENSATORY ADDITIONAL LANDSCAPING AS DETERMINED BY OWNER OR OWNER'S REPRESENTATIVE.

PROTECTION OF WORK

1. IT IS NECESSARY FOR THE CONTRACTOR TO PROTECT BOTH THE WORK AREA AND THE COMPLETED WORK DURING THE CONSTRUCTION PROCESS. THE CONTRACTOR WILL BE RESPONSIBLE FOR REPAIRS BOTH SMALL AND LARGE IF WORK IS NOT ADEQUATELY PROTECTED.

2. TOPSOIL SHALL BE PROTECTED UNTIL GRASS IS OF SUFFICIENT HEIGHT, THICKNESS, AND COVERAGE TO MEET SWPPP SPECIFICATIONS AND PROTECT TOPSOIL FROM WASHING AWAY. AREAS DETERMINED TO BE AT RISK DURING CONSTRUCTION AND ARE NOT SPECIFICALLY CALLED OUT ON PLANS DUE TO PRESENCE OF SWALES, MICROTOPOGRAPHY, OR SIMILAR CONDITIONS THAT ELEVATES THE RISK OF THE AREA SHOULD BE BROUGHT TO THE ATTENTION OF THE OWNER OR OWNER'S REPRESENTATIVE TO DISCUSS APPROPRIATE PROTECTION MEASURES. FAILURE TO PROPERLY PROTECT TOPSOIL BEFORE STABILIZATION WILL REQUIRE RE-INSTALLATION OF TOPSOIL AT THE COST OF THE CONTRACTOR. IN GENERAL, ANY AREA THAT IS SUSCEPTIBLE TO FLOWING WATER SHOULD BE INSPECTED AND ANY MINOR MODIFICATIONS/REPAIRS TAKEN AS PROTECTIVE MEASURES ARE REQUIRED AND EXPECTED.

FINAL WALKTHROUGH

1. A FINAL WALKTHROUGH FOR EACH MAJOR COMPONENT WILL BE COMPLETED BY THE OWNER OR OWNER'S REPRESENTATIVE. THE MAJOR COMPONENT WILL BE COMPLETED ONLY AFTER THE FINAL WALKTHROUGH AND ANY ASSOCIATED PUNCH LIST ITEMS ARE CORRECTED AS REQUIRED PER THE DRAWINGS AND SPECIFICATIONS.

TEMPORARY SEED INSTALLATION

1. TEMPORARY SEED SHALL BE APPLIED BETWEEN CONSTRUCTION OPERATIONS ON SOIL THAT WILL NOT BE GRADED OR REWORKED FOR 21 DAYS OR GREATER. THESE AREAS SHALL BE SEEDED WITHIN 7 DAYS AFTER GRADING.

2. AFTER TOPSOIL HAS BEEN REAPPLIED AND PREPPED FOR SEED INSTALLATION, APPLY TEMPORARY SEED MIX TO ALL DISTURBED AREAS AS FOLLOWS:

a. FROM MARCH TO JULY, APPLY ANNUAL OATS (*AVENA SATIVA*) AT A RATE OF 30 POUNDS PER ACRE.

b. FROM AUGUST TO FEBRUARY, APPLY PERENNIAL RYEGRASS (*LOLIUM PERENNE*) AT A RATE OF 50 POUNDS PER ACRE.

c. FOLLOWING SEED APPLICATION ALL DISTURBED GROUND SHALL BE PROTECTED WITH SUITABLE STRAW MULCH OR EROSION FABRIC DEEMED SUITABLE TO WITHSTAND THE LEVEL OF RISK ASSOCIATED WITH POTENTIAL FLOODING, WIND, OR OTHER RISK WITH THE POTENTIAL TO THREATEN TOPSOIL OR SEED VIABILITY.

d. TOPSOILS SHALL NOT BE OVERCOMPACTED. OVERCOMPACTED TOPSOIL OR AREAS DEEMED UNSUITABLE UPON INSPECTION SHALL BE MODIFIED TO SUITABLE GROWING CONDITIONS.

e. ALL SEED MIXES SHALL BE APPROVED BY OWNER OR OWNER'S REPRESENTATIVE PRIOR TO ORDERING.

PERMANENT SEEDING AND PLANTING

1. PERMANENT SEEDING OF LAWN (NEW SEED) AND WETLAND BUFFER SHALL BE APPLIED IN LATE FALL (NOVEMBER 2026) ALONG WITH TEMPORARY SEED;

2. PERMANENT SEEDING OF LAWN (OVERSEEDING) SHALL BE APPLIED IN EARLY SPRING 2027;

3. WETLAND PLUG PLANTING SHALL OCCUR IN APRIL OR MAY 2027;

ABBREVIATIONS

AC	ACRES
ADDL	ADDITIONAL
ANSI	AMERICAN NATIONAL STANDARDS INSTITUTE
APX	APPROXIMATELY
ATG	ADJUST TO GRADE
BM	BENCHMARK
BMP	BEST MANAGEMENT PRACTICE
CAD	COMPUTER-AIDED DESIGN
CL	CENTERLINE
DBH	DIAMETER AT BREAST HEIGHT
DND	DO NOT DISTURB
ECF	EROSION CONTROL FABRIC
ED	EDITION
EL	ELEVATION
ELEV	ELEVATION
EPA	ENVIRONMENTAL PROTECTION AGENCY
EX	EXISTING
FT	FEET
GRAM	GRAMINOID
INIT	INITIAL
INV	INVERT
LF	LINEAR FEET
MIN	MINIMUM
NO	NUMBER
NPDES	NATIONAL POLLUTION DISCHARGE ELIMINATION SYSTEM
NTS	NOT TO SCALE
OC	ON CENTER
ODOT	OHIO DEPARTMENT OF TRANSPORTATION
OSHA	OCCUPATIONAL SAFETY AND HEALTH ADMINISTRATION
OUPS	OHIO UTILITIES PROTECTION SERVICE
PL	PROPERTY LINE PROPERTY LINE
PROP	PROPOSED
SQFT	SQUARE FEET
SWPPP	STORMWATER POLLUTION PREVENTION PLAN
TYP	TYPICAL
TBR	TO BE REMOVED
VCP	VITRIFIED CLAY PIPE

PREPARED BY

MAD SCIENTIST ASSOCIATES LLC

PREPARED FOR

SYCAMORE CREEK PARK POND ENHANCEMENT

500 HEREFORD DR
PICKERINGTON
FAIRFIELD COUNTY, OH

REVISIONS

#	DATE	DESCRIPTION	INIT

DATE
AUGUST 10, 2026

DRAWN BY
RBK / LMS

CHECKED BY
LMS / MAD

SHEET TITLE
GENERAL NOTES

SHEET NUMBER
02 / 14

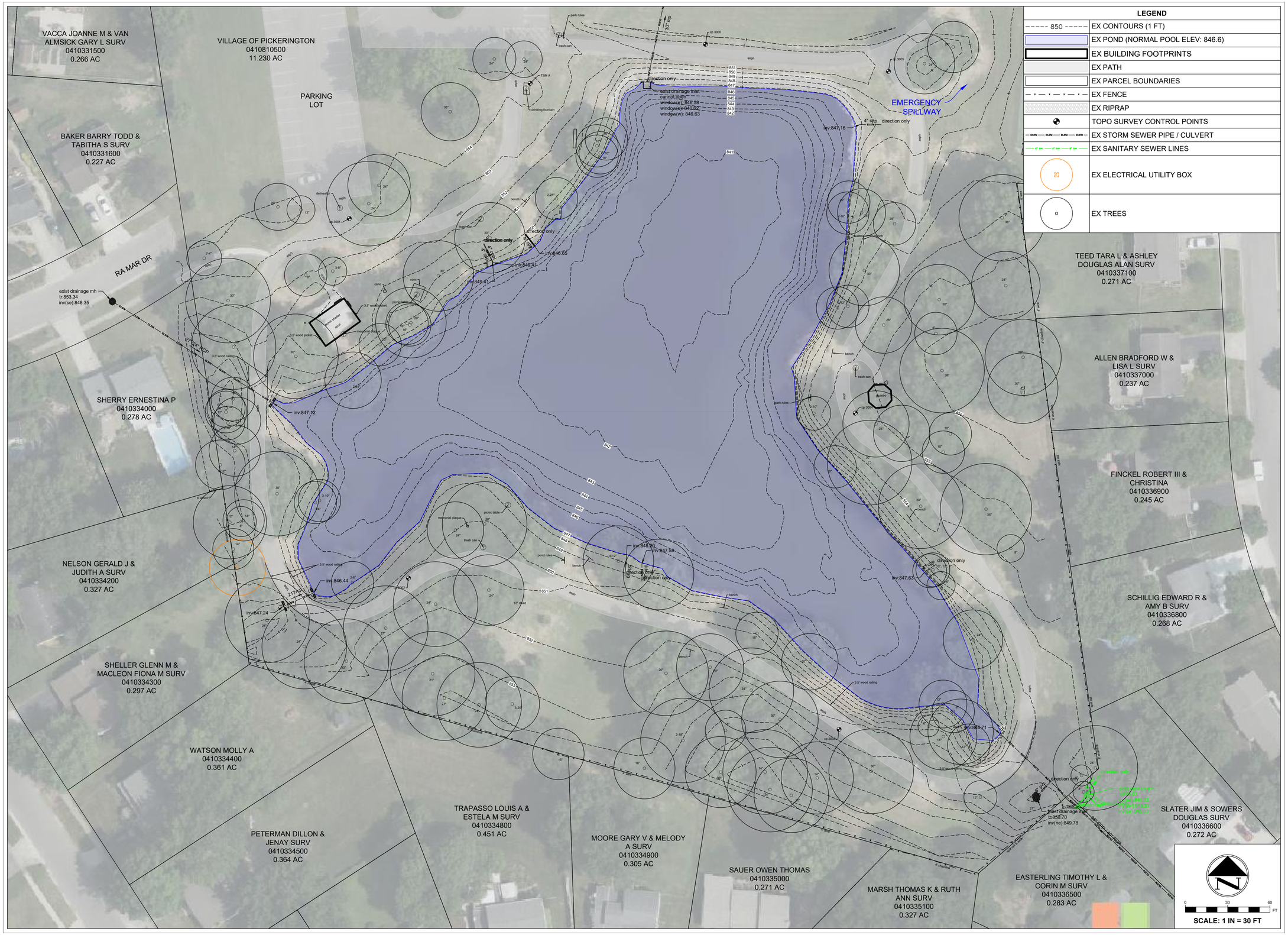

LEGEND	
850	EX CONTOURS (1 FT)
	EX POND (NORMAL POOL ELEV: 846.6)
	EX BUILDING FOOTPRINTS
	EX PATH
	EX PARCEL BOUNDARIES
	EX FENCE
	EX RIPRAP
	TOPO SURVEY CONTROL POINTS
	EX STORM SEWER PIPE / CULVERT
	EX SANITARY SEWER LINES
	EX ELECTRICAL UTILITY BOX
	EX TREES

PREPARED BY

MAD SCIENTIST ASSOCIATES LLC

PREPARED FOR

SYCAMORE CREEK PARK POND ENHANCEMENT

500 HEREFORD DR
PICKERINGTON
FAIRFIELD COUNTY, OH

REVISIONS #	DATE	DESCRIPTION	INIT

DATE
AUGUST 10, 2026

DRAWN BY
RBK / LMS

CHECKED BY
LMS / MAD

SHEET TITLE
EXISTING CONDITIONS

SHEET NUMBER
03 / 14

LEGEND

850	EX CONTOURS (1 FT)
850	PROPOSED CONTOURS (1 FT)
	PARTIALLY DRAINED POND (POOL ELEV: 843.0)
	EX BUILDING FOOTPRINTS
	EX PATH
	EX PATH TBR
	EX PARK BOUNDARY
	EX FENCE
	EX FENCE TBR
	CONSTRUCTION FENCE
	CONSTRUCTION STAGING AREA (1500 SQFT)
	EX RIPRAP
	TOPO SURVEY CONTROL POINTS
	EX STORM SEWER PIPE / CULVERT
	EX SANITARY SEWER LINES
	EX ELECTRICAL UTILITY BOX
	EX TREES (TO PRESERVE)
	EX TREES (TO BE REMOVED)

PREPARED BY

MAD SCIENTIST ASSOCIATES LLC

PREPARED FOR

SYCAMORE CREEK PARK POND ENHANCEMENT

500 HEREFORD DR
PICKERINGTON
FAIRFIELD COUNTY, OH

REVISIONS

#	DATE	DESCRIPTION	INIT

DATE
AUGUST 10, 2026

DRAWN BY
RBK / LMS

CHECKED BY
LMS / MAD

SHEET TITLE
GRADING PLAN
PHASE 1

SHEET NUMBER
04 / 14

LEGEND	
850	EX CONTOURS (1 FT)
850	PROPOSED CONTOURS (1 FT)
	WILDLIFE POOL (POOL ELEV: 846.6)
	EX BUILDING FOOTPRINTS
	EX PARK BOUNDARY
	EX PATH
	PROPOSED PATHS
	PROPOSED PIER
	EX FENCE
	CONSTRUCTION FENCE (4 FT TALL) (2,300 LF)
	CONSTRUCTION STAGING AREA (1,500 SQFT)
	TOPSOIL STOCKPILE AREA (4,650 SQFT)
	EX RIPRAP
	PROPOSED RIPRAP
	PROPOSED STEPPING STONES WITH GRAVEL BASE
	TOPO SURVEY CONTROL POINTS
	EX STORM SEWER PIPE / CULVERT
	PROPOSED PIPE / CULVERT
	PROPOSED HEADWALLS
	EX SANITARY SEWER LINES
	EX ELECTRICAL UTILITY BOX
	EX TREES (TO PRESERVE)
	EX TREES (TO BE REMOVED)
	IMPORTED TOPSOIL (4 IN. ABOVE FINISHED GRADE)

PREPARED BY

MAD SCIENTIST ASSOCIATES LLC

PREPARED FOR

PICKERINGTON OHIO 1812

SYCAMORE CREEK PARK POND ENHANCEMENT

500 HEREFORD DR
PICKERINGTON
FAIRFIELD COUNTY, OH

REVISIONS

#	DATE	DESCRIPTION	INIT

DATE
AUGUST 10, 2026

DRAWN BY
RBK / LMS

CHECKED BY
LMS / MAD

SHEET TITLE
GRADING PLAN PHASE 2

SHEET NUMBER
05 / 14

XS – (1)

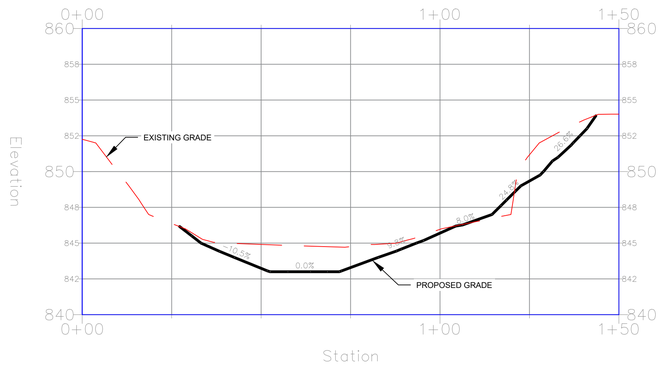

HORIZONTAL SCALE: 1" = 40'
VERTICAL SCALE: 1" = 10'

XS – (2)

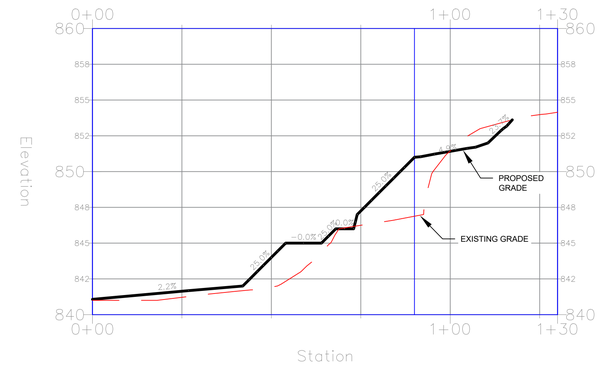

HORIZONTAL SCALE: 1" = 40'
VERTICAL SCALE: 1" = 10'

XS – (3)

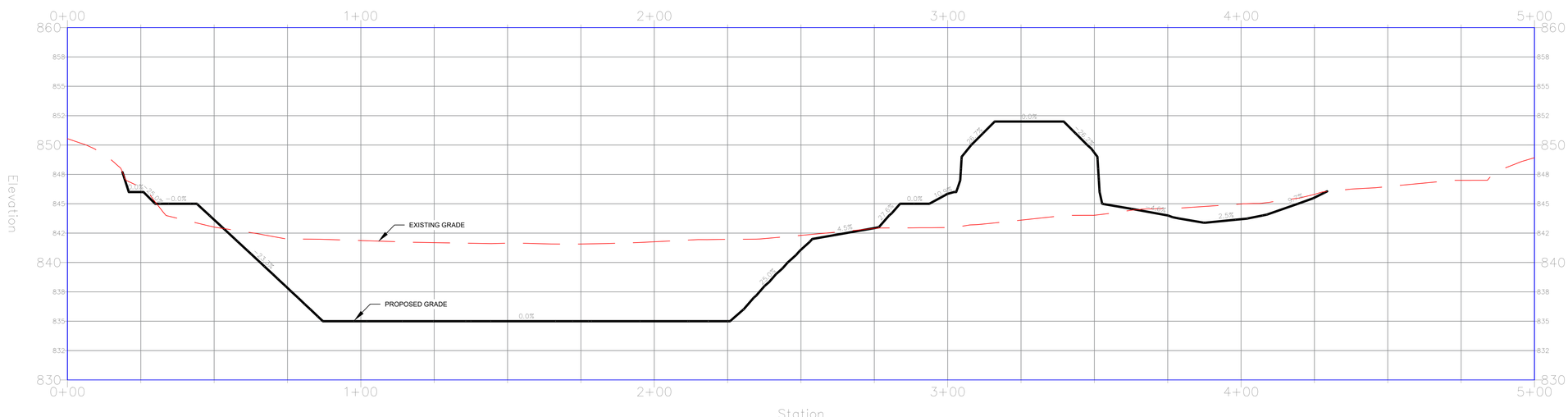

HORIZONTAL SCALE: 1" = 40'
VERTICAL SCALE: 1" = 10'

PREPARED BY

MAD SCIENTIST ASSOCIATES LLC

PREPARED FOR

SYCAMORE CREEK PARK POND ENHANCEMENT

500 HEREFORD DR
PICKERINGTON
FAIRFIELD COUNTY, OH

REVISIONS

#	DATE	DESCRIPTION	INIT

DATE
AUGUST 10, 2026

DRAWN BY
RBK / LMS

CHECKED BY
LMS / MAD

SHEET TITLE
CROSS SECTIONS

SHEET NUMBER
06 / 14

LEGEND

850	EX CONTOURS (1 FT)
850	PROPOSED CONTOURS (1 FT)
	WILDLIFE POOL (NORMAL POOL ELEV: 846.6)
	EX BUILDING FOOTPRINTS
	EX PARK BOUNDARY
	EX PATH
	EX PATH (TO BE REMOVED AND REPLACED)
	PROPOSED PATH ADDITION
	PROPOSED PIER
	EX FENCE
	EX FENCE TO BE REMOVED
	EX RIPRAP
	PROPOSED RIPRAP
	PROPOSED STEPPING STONES WITH GRAVEL BASE
	TOPO SURVEY CONTROL POINTS
	EX STORM SEWER PIPE / CULVERT
	PROPOSED PIPE / CULVERT
	EX SANITARY SEWER LINES
	EX ELECTRICAL UTILITY BOX
	EX TREES (TO PRESERVE)
	EX TREES (TO BE REMOVED)

PLANTING AND SEEDING ZONES

	LAWN (NEW SEED) (28,000 SQFT)
	LAWN (OVERSEED) (60,000 SQFT)
	WETLAND BUFFER (5 FT WIDE) (PLUGS & SEED) (5,600 SQFT)
	WETLAND FRINGE (PLUGS) (900 LF)

PREPARED BY

MAD SCIENTIST ASSOCIATES LLC

PREPARED FOR

SYCAMORE CREEK PARK POND ENHANCEMENT

500 HEREFORD DR
PICKERINGTON
FAIRFIELD COUNTY, OH

REVISIONS

#	DATE	DESCRIPTION	INIT

DATE
AUGUST 10, 2026

DRAWN BY
RBK / LMS

CHECKED BY
LMS / MAD

SHEET TITLE
PLANTING AND SEEDING PLAN

SHEET NUMBER
07 / 14

PLANTING SCHEDULE

WETLAND FRINGE PLUGS (900 LF)			
SPECIES NAME	**COMMON NAME**	**SPACING**	**QTY**
PONTEDERIA CORDATA	PICKERELWEED	18 IN O.C.	98
SAGITTARIA LATIFOLIA	BROADLEAF ARROWHEAD	18 IN O.C.	98
SCHOENOPLECTUS TABERNAEMONTANI	SOFT-STEM BULRUSH	18 IN O.C.	98
CAREX CRINITA	FRINGED SEDGE	18 IN O.C.	98
HIBISCUS MOSCHEUTOS	SWAMP ROSE MALLOW	18 IN O.C.	98
JUNCUS EFFUSUS	SOFT RUSH	18 IN O.C.	98
		TOTAL	588
WETLAND BUFFER PLUGS (5,600 SQFT)			
SPECIES NAME	**COMMON NAME**	**SPACING**	**QTY**
ASCLEPIAS INCARNATA	SWAMP MILKWEED	18 IN O.C.	343
CAREX GRAYI	GRAY'S SEDGE	18 IN O.C.	343
HELENIUM AUTUMNALE	SNEEZEWEED	18 IN O.C.	294
RUDBECKIA LACINIATA	CUTLEAF CONEFLOWER	18 IN O.C.	294
PENSTEMON DIGITALIS	FOXGLOVE BEARDTONGUE	18 IN O.C.	294
PHYSOSTEGIA VIRGINIANA	OBEDIENT PLANT	18 IN O.C.	294
MIMULUS RINGENS	ALLEGHENY MONKEYFLOWER	18 IN O.C.	294
SCIRPUS CYPERINUS	WOOL-GRASS	18 IN O.C.	343
		TOTAL	2499

SEEDING SCHEDULE

WETLAND BUFFER SEED (5,600 SQFT)			
SPENCE RESTORATION NURSERY - BIOSWALE SEED MIX (OR EQUIVALENT)			
SPECIES NAME	**COMMON NAME**	**FORM**	**PLS OZ/AC**
CAREX ANNECTANS XANTHOCARPA	YELLOW FOX SEDGE	GRAM	4
CAREX FRANKII	FRANK'S SEDGE	GRAM	4
CAREX GRANULARIS	MEADOW SEDGE	GRAM	2
CAREX MOLESTA	FIELD OVAL SEDGE	GRAM	1
CAREX SCOPARIA	LANCE-FRUITED OVAL SEDGE	GRAM	1
CAREX VULPINOIDEA	FOX SEDGE	GRAM	6
ELYMUS RIPARIUS	RIVERBANK WILD RYE	GRAM	16
ELYMUS VIRGINICUS	VIRGINIA WILD RYE	GRAM	48
PANICUM VIRGATUM	SWITCHGRASS	GRAM	8
SCHIZACHYRIUM SCOPARIUM	LITTLE BLUESTEM	GRAM	16
SCIRPUS ATROVIRENS	DARK GREEN BULRUSH	GRAM	3
SCIRPUS PENDULUS	REDDISH BULRUSH	GRAM	2
SCIRPUS CYPERINUS	WOOLGRASS	GRAM	1
ASCLEPIAS INCARNATA	MARSH MILKWEED	FORB	1
EUPATORIUM PERFOLIATUM	BONESET	FORB	1
HELENIUM AUTUMNALE	AUTUMN SNEEZEWEED	FORB	2.50
HIBISCUS MOSCHEUTOS	SWAMP ROSE MALLOW	FORB	4
LIATRIS SPICATA	DENSE BLAZING STAR	FORB	2
LOBELIA CARDINALIS	CARDINAL FLOWER	FORB	0.25
LOBELIA SIPHILITICA	GREAT BLUE LOBELIA	FORB	0.25
LYCOPUS AMERICANUS	WATER HOREHOUND	FORB	0.50
OLIGONEURON RIDDELLII	RIDDELL'S GOLDENROD	FORB	2
PENSTEMON DIGITALIS	FOXGLOVE BEARDTONGUE	FORB	1
PYCNANTHEMUM VIRGINIANUM	MOUNTAIN MINT	FORB	0.50
RUDBECKIA FULGIDA SPECIOSA	SHOWY BLACK-EYED SUSAN	FORB	3
RUDBECKIA HIRTA	BLACK-EYED SUSAN	FORB	2
SENNA HEBECARPA	WILD SENNA	FORB	2
SYMPHYOTRICHUM FIRMUM	SHINING ASTER	FORB	1
SYMPHYOTRICHUM NOVAE-ANGLIAE	NEW ENGLAND ASTER	FORB	1
VERBENA HASTATA	BLUE VERVAIN	FORB	1
VERNONIA FASCICULATA	SMOOTH IRONWEED	FORB	2
ZIZIA AUREA	GOLDEN ALEXANDERS	FORB	1

LAWN (NEW SEED) (28,000 SQFT)		
MERIT SELECT TURF LAWN SEED MIX (OR EQUIVALENT) (RATE = 10 LB PER 1,000 SQFT)		
SPECIES NAME	**COMMON NAME**	**%**
LOLIUM PERENNE	LAFAYETTE TALL FESCUE	30.00
POA PRATENSIS L.	PROVIDENCE TALL FESCUE	30.00
FESTUCA RUBRA	WICHITA TALL FESCUE	30.00
POA PRATENSIS L.	KENTUCKY BLUEGRASS	10.00

LAWN (OVERSEED) (60,000 SQFT)		
MERIT SELECT TURF LAWN SEED MIX (OR EQUIVALENT) (RATE = 5 LB PER 1,000 SQFT)		
SPECIES NAME	**COMMON NAME**	**%**
LOLIUM PERENNE	LAFAYETTE TALL FESCUE	30.00
POA PRATENSIS L.	PROVIDENCE TALL FESCUE	30.00
FESTUCA RUBRA	WICHITA TALL FESCUE	30.00
POA PRATENSIS L.	KENTUCKY BLUEGRASS	10.00

GENERAL NOTES

1. PLANTING ZONES SHALL BE MARKED WITH PIN FLAGS BY CONTRACTOR PRIOR TO PLANTING BASED ON EXISTING WATER DEPTHS AND SEASONAL CONDITIONS THE WEEK THAT PLANTING IS TO OCCUR; TO THE EXTENT POSSIBLE, PLANTING ZONES SHALL BEST REFLECT BASELINE CONDITIONS FOR THE MAJORITY OF THE YEAR.
2. CONTRACTOR SHOULD WATER PLANTS PRIOR TO AND FOLLOWING INSTALLATION UNLESS PLANTS ARE ALREADY IN SATURATED SOIL.
3. ALL PLANT MATERIALS SHALL CONFORM TO AMERICAN STANDARD FOR NURSERY STOCK. PLANTS SHALL BE TRUE TO SPECIES AND VARIETY SPECIFIED AND NURSERY GROWN IN ACCORDANCE WITH GOOD HORTICULTURAL PRACTICES UNDER CLIMATIC CONDITIONS SIMILAR TO THOSE AT THE PROJECT SITE. PLANTS SHALL BE SOUND, HEALTHY, VIGOROUS, WELL-BRANCHED, AND DENSELY FOLIATED WHEN IN LEAF, AND FREE OF DISEASE AND PESTS. THEY SHALL HAVE ROBUST ROOT SYSTEMS AND SHALL BE FREE OF PHYSICAL DAMAGE OR OTHER CONDITIONS THAT WOULD PREVENT THRIVING GROWTH.
4. CONTAINERIZED PLANTS SHALL BE WELL ESTABLISHED IN THE CONTAINER WITH A ROOT SYSTEM SUFFICIENTLY DEVELOPED TO RETAIN ITS SHAPE AND HOLD TOGETHER WHEN REMOVED FROM THE CONTAINER. PLANTS SHALL NOT BE POT BOUND OR HAVE CIRCLING ROOTS, OR THOSE THAT DO SHALL BE PROPERLY LOOSENED PRIOR TO INSTALLATION. ROOT COLLAR SHALL BE APPARENT AT THE SOIL SURFACE.
5. SUBSTITUTIONS OF PLANT MATERIALS WILL NOT BE PERMITTED UNLESS REVIEWED AND AUTHORIZED BY THE OWNER OR OWNER'S REPRESENTATIVE IN WRITING. ALL PLANT MATERIALS, SHIPMENTS, AND DELIVERIES SHALL COMPLY WITH STATE AND FEDERAL LAWS AND REGULATIONS GOVERNING THE INSPECTION, SHIPPING, SALE, AND HANDLING OF PLANT STOCK. A CERTIFICATE OF INSEPCTION, OR A COPY THEREOF, SHALL ACCOMPANY EACH SHIPMENT OR DELIVERY OF PLANT MATERIAL. THE CERTIFICATE SHALL BEAR THE NAME AND ADDRESS OF THE SOURCE OF THE STOCK.
6. PLANTS SHALL BE PROTECTED FROM EXCESSIVE HANDLING AND VIBRATION. PLANTS SHALL BE CAREFULLY UNLOADED FROM THE DELIVERY VEHICLE AND HANDLED WITH SUITABLE SUPPORT OF THE BASE OR ROOT BALL TO AVOID DAMAGE. PLANTS SHALL NOT BE DRAGGED, LIFTED, OR DROPPED IN A MANNER THAT WILL LOOSEN THE ROOTS OR DAMAGE THE PLANT.

PLANTING HERBACEOUS PLUGS

1. PLUGS SHALL BE PLANTED IN A GRID PATTERN.
2. PLUGS SHALL BE INSTALLED BETWEEN APRIL-MAY TO ENSURE SUCCESSFUL ESTABLISHMENT.
3. CAREFULLY REMOVE PLUG FROM PLASTIC CONTAINER BY SQUEEZING THE LINER AND LIFTING CAREFULLY FROM THE BASE OF THE PLANT.
4. EXCAVATE HOLES USING A DIBBLE OR SMALL AUGER AND PLACE PLUGS INTO HOLE LEAVING NO VOIDS OR AIR POCKETS BENEATH THE PLANT, AS SHOWN IN THE DIBBLE PLANTING DETAIL.
5. BACKFILL THE HOLE WITH NATIVE SOILS, AVOIDING LARGE CHUNKS OF CLAY AND LIGHTLY COMPRESS SOIL AROUND PLANT. WATER IN, AS NECESSARY.

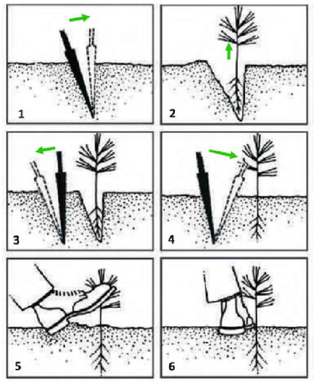

DIBBLE PLANTING INSTRUCTIONS:

1. INSERT DIBBLE AT ANGLE SHOWN AND PUSH FORWARD TO UPRIGHT POSITION.
2. PLACE PLUG IN HOLE, LIFT TO APPROPRIATE PLANTING DEPTH, AND STRAIGHTEN ROOTS.
3. INSERT DIBBLE 2 INCHES FROM SEEDLING, THEN PULL BACK TO PACK THE SOIL AROUND ROOTS.
4. PUSH HANDLE TOWARD PLANT TO FINISH PACKING SOIL AT TOP OF ROOTS.
5. FILL IN SECOND HOLE BY PRESSING WITH HEEL.
6. PACK SOIL AROUND PLUG WITH FEET (*from Ohio Dept. of Natural Resources, Division of Forestry*)

PREPARED BY

MAD SCIENTIST ASSOCIATES LLC

PREPARED FOR

SYCAMORE CREEK PARK POND ENHANCEMENT

500 HEREFORD DR
PICKERINGTON
FAIRFIELD COUNTY, OH

REVISIONS #	DATE	DESCRIPTION	INIT

DATE
AUGUST 10, 2026

DRAWN BY
RBK / LMS

CHECKED BY
LMS / MAD

SHEET TITLE
PLANTING SCHEDULE AND DETAILS

SHEET NUMBER
08 / 14

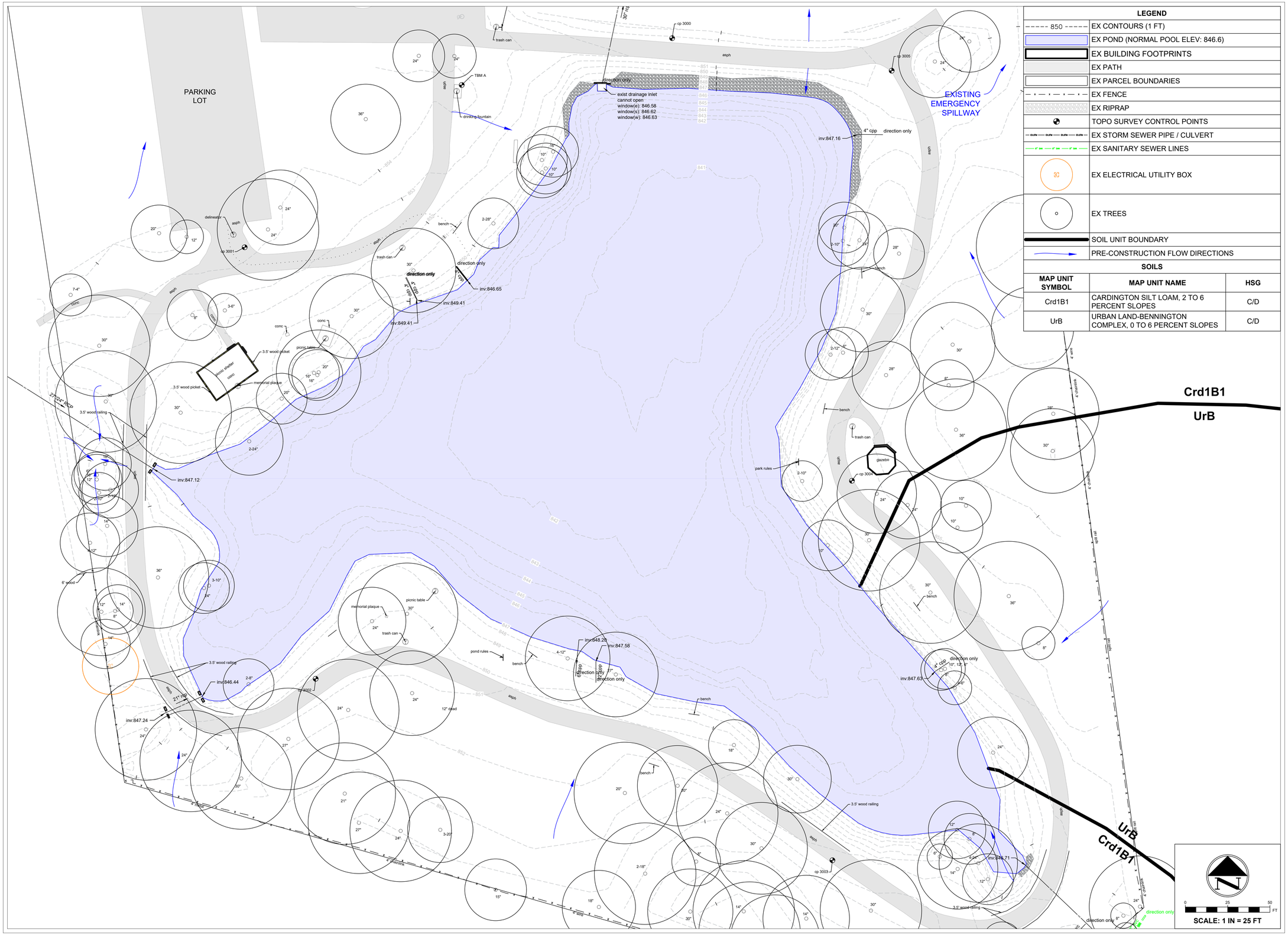

LEGEND	
850	EX CONTOURS (1 FT)
	EX POND (NORMAL POOL ELEV: 846.6)
	EX BUILDING FOOTPRINTS
	EX PATH
	EX PARCEL BOUNDARIES
	EX FENCE
	EX RIPRAP
	TOPO SURVEY CONTROL POINTS
	EX STORM SEWER PIPE / CULVERT
	EX SANITARY SEWER LINES
	EX ELECTRICAL UTILITY BOX
	EX TREES
	SOIL UNIT BOUNDARY
	PRE-CONSTRUCTION FLOW DIRECTIONS

SOILS

MAP UNIT SYMBOL	MAP UNIT NAME	HSG
Crd1B1	CARDINGTON SILT LOAM, 2 TO 6 PERCENT SLOPES	C/D
UrB	URBAN LAND-BENNINGTON COMPLEX, 0 TO 6 PERCENT SLOPES	C/D

PREPARED BY

MAD SCIENTIST ASSOCIATES LLC

PREPARED FOR

PICKERINGTON OHIO 1812

SYCAMORE CREEK PARK POND ENHANCEMENT

500 HEREFORD DR
PICKERINGTON
FAIRFIELD COUNTY, OH

REVISIONS

#	DATE	DESCRIPTION	INIT

DATE
AUGUST 10, 2026

DRAWN BY
RBK / LMS

CHECKED BY
LMS / MAD

SHEET TITLE
SWPPP EXISTING CONDITIONS

SHEET NUMBER
09 / 14

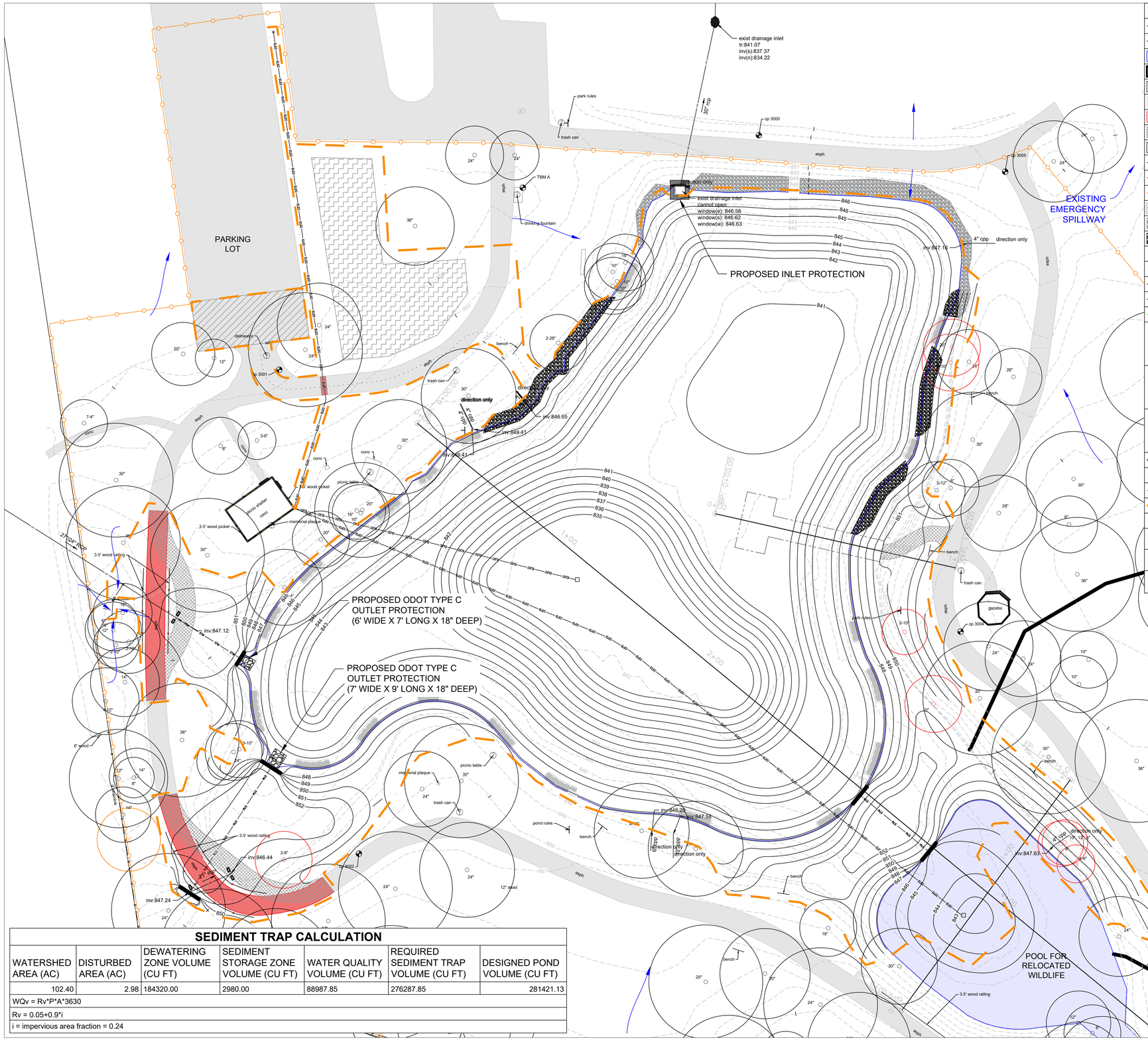

LEGEND

850	EX CONTOURS (1 FT)
850	PROPOSED CONTOURS (1 FT)
	WILDLIFE POOL (NORMAL POOL ELEV: 846.6)
	EX BUILDING FOOTPRINTS
	EX PARK BOUNDARY
	EX PATH
	EX PATH (TO BE REMOVED AND REPLACED)
	PROPOSED PATH ADDITION
	PROPOSED PIER
	EX FENCE
	EX FENCE TO BE REMOVED
	CONSTRUCTION FENCE
	CONSTRUCTION STAGING AREA (1500 SQFT)
	EX RIPRAP
	PROPOSED RIPRAP
	PROPOSED STEPPING STONES WITH GRAVEL BASE
	TOPO SURVEY CONTROL POINTS
	EX STORM SEWER PIPE / CULVERT
	PROPOSED PIPE / CULVERT
	EX SANITARY SEWER LINES
	EX ELECTRICAL UTILITY BOX
	EX TREES (TO PRESERVE)
	EX TREES (TO BE REMOVED)
	SOIL UNIT BOUNDARY
	POST-CONSTRUCTION FLOW DIRECTIONS
	CONSTRUCTION ACCESS PATH
	LIMITS OF DISTURBANCE

SOILS

MAP UNIT SYMBOL	MAP UNIT NAME	HSG
Crd1B1	CARDINGTON SILT LOAM, 2 TO 6 PERCENT SLOPES	C/D
UrB	URBAN LAND-BENNINGTON COMPLEX, 0 TO 6 PERCENT SLOPES	C/D

SEDIMENT TRAP CALCULATION

WATERSHED AREA (AC)	DISTURBED AREA (AC)	DEWATERING ZONE VOLUME (CU FT)	SEDIMENT STORAGE ZONE VOLUME (CU FT)	WATER QUALITY VOLUME (CU FT)	REQUIRED SEDIMENT TRAP VOLUME (CU FT)	DESIGNED POND VOLUME (CU FT)
102.40	2.98	184320.00	2980.00	88987.85	276287.85	281421.13

WQv = Rv*P*A*3630

Rv = 0.05+0.9*i

i = impervious area fraction = 0.24

N

0 25 50 FT

SCALE: 1 IN = 25 FT

PREPARED BY

MAD SCIENTIST ASSOCIATES LLC

PREPARED FOR

SYCAMORE CREEK PARK POND ENHANCEMENT

500 HEREFORD DR
PICKERINGTON
FAIRFIELD COUNTY, OH

REVISIONS #	DATE	DESCRIPTION	INIT

DATE
AUGUST 10, 2026

DRAWN BY
RBK / LMS

CHECKED BY
LMS / MAD

SHEET TITLE
SWPPP CONSTRUCTION MANAGEMENT

SHEET NUMBER
10 / 14

NON-SEDIMENT POLLUTANT CONTROL NOTES

1. ANY AND ALL WASTE MATERIALS (SOLID, HAZARDOUS, TOXIC, CONTAMINATED SOILS, ETC) GENERATED AT THE SITE SHALL BE PROPERLY DISPOSED OF IN ACCORDANCE WITH ALL APPLICABLE LOCAL, STATE, AND FEDERAL RULES AND REGULATIONS. ON- SITE STORAGE CONTAINERS SHALL BE COVERED AND NOT LEAKING. IT IS PROHIBITED TO BURN, BURY OR POUR OUT ON THE GROUND ANY SOLVENTS, PAINTS, GASOLINE, DIESEL FUEL, MOTOR OIL, HYDRAULIC FLUID, ANTIFREEZE, CURING COMPOUND, OR ANY OTHER TOXIC OR HAZARDOUS WASTES.

2. THE NPDES CONSTRUCTION STORM WATER GENERAL PERMIT ONLY AUTHORIZES THE DISCHARGE OF STORM WATER AND CERTAIN UNCONTAMINATED NON-STORM WATERS. THE DISCHARGE OF NON-STORM WATERS TO WATERS OF THE STATE MAY BE IN VIOLATION OF LOCAL, STATE, AND FEDERAL LAWS OR REGULATIONS. ALL PROCESS WASTEWATERS (E.G., EQUIPMENT WASHING) SHALL BE COLLECTED AND DISPOSED OF PROPERLY.

3. IN THE EVENT OF A LARGER RELEASE (25 OR MORE GALLONS) OF PETROLEUM WASTE, CONTRACTOR MUST CONTACT OHIO EPA (AT 1-800-282-9378), THE LOCAL FIRE DEPARTMENT, AND THE LOCAL EMERGENCY PLANNING COMMITTEE (LEPC) WITHIN 30 MINUTES OF A SPILL OF 25 OR MORE GALLONS.

4. ALL CLEAN CONSTRUCTION WASTES TO BE DISPOSED OF ON THE PROPERTY MUST BE DONE SO IN ACCORDANCE WITH ALL LOCAL, STATE, AND FEDERAL RULES AND REGULATIONS.

5. ALL CONSTRUCTION AND DEMOLITION DEBRIS (C&DD) WASTE WILL BE DISPOSED OF IN AN OHIO EPA APPROVED C&DD LANDFILL AS REQUIRED BY OHIO REVISED CODE (ORC) 371 4. NOTE: CONSTRUCTION DEBRIS MAY BE DISPOSED OF ON SITE, BUT DEMOLITION DEBRIS MUST BE DISPOSED OF IN AN OHIO EPA APPROVED LANDFILL.

6. IF THE CONTRACTOR WILL UTILIZE AN ABOVE GROUND STORAGE TANK (AST) OF 660 GALLONS OR MORE, TOTAL ABOVE GROUND TANK STORAGE OF 1,330 GALLONS, OR BELOW GROUND STORAGE OF 42,000 GALLONS OF FUEL, HE SHALL SUBMIT A SPILL PREVENTION CONTROL AND COUNTERMEASURES (SPCC) PLAN TO THE COUNTY FOR APPROVAL PRIOR TO CONSTRUCTION.

7. FUEL STORAGE TANKS SHOULD BE LOCATED AWAY FROM DRAINAGE CHANNELS. CONTRACTOR SHALL UTILIZE SELF -CONTAINED SPILL PROOF TANKS.

8. DUST SUPPRESSANTS SHALL BE USED IN CASES OF EXCESSIVE DUST. OIL MAY NOT BE USED AS A DUST SUPPRESSANT. DUST SUPPRESSANTS MUST NOT BE STORED NEAR CATCH BASINS OR OTHER DRAINAGE WAYS. DUST SUPPRESSANT SHALL NOT BE UTILIZED / IMPLEMENTED NEAR CATCH BASINS, DITCHES OR SWALES.

9. OPEN BURNING IS NOT ALLOWED.

SEDIMENT & EROSION CONTROL NOTES

1. ALL EROSION AND SEDIMENT CONTROL PRACTICES MUST CONFORM TO THE SPECIFICATION OF THE OHIO ENVIRONMENTAL PROTECTION AGENCY RAINWATER AND LAND DEVELOPMENT MANUAL.

2. CONSTRUCTION ACTIVITIES SHALL BE SCHEDULED SUCH THAT A MINIMUM AREA OF THE SITE IS DISTURBED AT A TIME. CONSTRUCTION OPERATIONS SHALL BE SCHEDULED AND PERFORMED SO THAT PREVENTATIVE SOIL EROSION CONTROL MEASURES ARE IN PLACE PRIOR TO EXCAVATION IN CRITICAL AREAS AND TEMPORARY STABILIZATION MEASURES ARE IN PLACE IMMEDIATELY FOLLOWING BACKFILLING OPERATIONS. CONTRACTOR SHALL REDUCE EFFECTS OF STORM WATER BY USING AND/OR MAINTAINING GRASSED SWALES, INFILTRATION STRUCTURES, OR WATER DIVERSIONS.

3. SPECIAL PRECAUTIONS WILL BE TAKEN IN THE USE OF CONSTRUCTION EQUIPMENT TO PREVENT SITUATIONS THAT PROMOTE EROSION.

4. CLEANUP WILL BE DONE IN A MANNER TO ENSURE THAT EROSION CONTROL MEASURES ARE NOT DISTURBED.

5. TEMPORARY SOIL STABILIZATION SHALL OCCUR WITHIN 7 DAYS AFTER ROUGH GRADING IF THE AREA WILL REMAIN IDLE LONGER THAN 14 DAYS. ANY DISTURBED AREA THAT IS NOT GOING TO BE WORKED FOR 14 DAYS OR MORE MUST BE SEEDED AND MULCHED BY NOVEMBER 1 OR MUST HAVE A DORMANT SEEDING OR MULCH COVER APPLIED BETWEEN NOVEMBER 1 AND MARCH.

6. SOIL STOCKPILES SHALL BE PLACED IN THE DESIGNATED SPOIL DEPOSITION AREA IN LOW MOUNDS AND STABILIZED OR PROTECTED TO PREVENT SOIL LOSS.

7. ALL DISTURBED AREAS SHALL BE PERMANENTLY STABILIZED WITHIN 7 DAYS OF FINAL GRADING. FURTHER, SOIL EROSION CONTROL MEASURES SHALL BE MAINTAINED UNTIL PERMANENT STABILIZATION IS COMPLETE, AT WHICH TIME TEMPORARY MEASURES WILL BE REMOVED. PERMANENT VEGETATION IS A GROUND COVER DENSE ENOUGH TO COVER 80% OF THE SOIL SURFACE AND MATURE ENOUGH TO SURVIVE WINTER WEATHER CONDITIONS.

8. HAUL ROUTES- THE CONTRACTOR SHALL BE RESPONSIBLE FOR THE CLEANUP OF ANY MUD, DIRT, OR DEBRIS DEPOSITED ON HAUL ROADS AS A RESULT OF THEIR OPERATIONS. SOIL SHALL BE REMOVED FROM ROADS AND PAVED SURFACES AT THE END OF EACH DAY IN SUCH A MANNER THAT DOES NOT CREATE OFF-SITE SEDIMENTATION IN ORDER TO ENSURE SAFETY AND ABATE OFF- SITE SOIL LOSS. COLLECTED SEDIMENTS SHALL BE PLACED IN A STABLE LOCATION ON SITE OR TAKEN OFF- SITE TO A STABLE LOCATION. CONTRACTOR SHALL USE STATE ROUTES (AND SHORTEST DISTANCE NON- STATE ROUTES) FOR PROJECT HAUL ROUTE.

9. FOR DISTURBED AREAS WITHIN 50 FEET OF A STREAM REMAINING DORMANT FOR OVER 14 DAYS, TEMPORARY EROSION CONTROLS SHALL BE APPLIED WITHIN 2 DAYS.

10. FOR DISTURBED AREAS OVER 50 FEET AWAY FROM A STREAM REMAINING DORMANT FOR OVER14 DAYS, TEMPORARY EROSION CONTROLS SHALL BE APPLIED WITHIN 7 DAYS.

11. FOR DISTURBED AREAS THAT WILL BE LEFT IDLE OVER WINTER, TEMPORARY EROSION CONTROLS SHALL BE APPLIED PRIOR TO ONSET OF WINTER.

12. FOR DISTURBED AREAS WITHIN 50 FEET OF A STREAM AT FINAL GRADE, PERMANENT EROSION CONTROLS SHALL BE APPLIED WITHIN 2 DAYS OF REACHING FINAL GRADE.

13. FOR DISTURBED AREAS REMAINING DORMANT FOR OVER 1 YEAR OR AT FINAL GRADE, PERMANENT EROSION CONTROLS SHALL BE APPLIED WITHIN 7 DAYS.

14. SEDIMENT CONTROL DEVICES SHALL BE IMPLEMENTED FOR ALL AREAS REMAINING DISTURBED FOR OVER 14 DAYS.

15. SEDIMENT CONTROLS SHALL BE INSTALLED/IMPLEMENTED WITHIN 7 DAYS OF GRUBBING ACTIVITIES.

16. THE SEDIMENT STORAGE ZONE OF ANY SILT TRAPS AND BASINS SHALL BE CLEANED OUT WHEN THE SILT OCCUPIES 40 PERCENT OF THE SEDIMENT STORAGE ZONE (APPROXIMATELY ONE-HALF OF THE SEDIMENT STORAGE ZONE DEPTH).

INSPECTIONS

1. WEEKLY INSPECTIONS OF BMPS ARE REQUIRED AS WELL AS AN INSPECTION WITHIN 24 HOURS AFTER EVERY RAIN EVENT OF 0.5 INCHES WITHIN A 24 HOUR PERIOD.

2. IF THE SITE WILL BE DORMANT FOR A LONG PERIOD, IT'S STABILIZED, AND LESS FREQUENT INSPECTIONS ARE DESIRED, A WAIVER REQUEST SHALL BE SUBMITTED TO OEPA FOR A REDUCTION TO MONTHLY INSPECTIONS

3. ONLY "QUALIFIED INSPECTION PERSONNEL" WILL PERFORM THE INSPECTIONS.

4. INSPECTION CHECKLISTS WILL BE COMPLETED AND SIGNED BY THE INSPECTOR AFTER EVERY INSPECTION.

5. INSPECTION RECORDS WILL BE KEPT FOR 3 YEARS AFTER TERMINATION OF CONSTRUCTION ACTIVITIES.

6. FOR BMPS THAT REQUIRE REPAIR OR MAINTENANCE, NON-SEDIMENT POND BMPS SHALL BE REPAIRED WITHIN 3 DAYS OF INSPECTION AND SEDIMENT PONDS SHALL BE REPAIRED OR CLEANED OUT WITHIN 10 DAYS OF INSPECTION.

7. IN THE CASE THAT A BMP DOES NOT MEET THE INTENDED FUNCTION, A NEW BMP WILL BE INSTALLED WITHIN 10 DAYS OF THE INSPECTION.

8. IF ANY BMP REQUIRED FOR INSTALLATION BY THE SWPPP IS MISSING, THE MISSING BMPS SHALL BE INSTALLED WITHIN 10 DAYS OF THE INSPECTION.

PRESERVATION OF NATURAL VEGETATION

1. CARE SHALL BE TAKEN TO PRESERVE THE NATURAL VEGETATION OUTSIDE OF THE CONSTRUCTION LIMITS. CONSTRUCTION TRAFFIC SHALL BE LIMITED TO THE AREAS WITHIN THE CONSTRUCTION LIMITS.

2. ANY DAMAGE TO TREES, SAPLINGS, AND GRASSES OUTSIDE OF CONSTRUCTION LIMITS SHALL BE REPAIRED BY THE CONTRACTOR. INJURIES TO BARK, TRUNKS, LIMBS, AND ROOTS OF TREES SHALL BE REPAIRED BY PROPERLY DRESSING, CUTTING, BRACING, AND PAINTING, USING ONLY APPROVED TREE SURGERY METHODS, TOOLS, AND MATERIALS

METHOD OF STORMWATER ANALYSIS DESIGN

1. THE RUNOFF COEFFICIENTS (C) ARE CALCULATED BASED ON THE LAND COVER AND EXISTING SOIL TYPE AT THE SITE AS DETERMINED BY ON-SITE DATA COLLECTION, AERIAL IMAGERY, AND THE NRCS WEB SOIL SURVEY. PRECIPITATION AND SURFACE WATER RUNOFF WILL BE COLLECTED AND CONVEYED TO THE WETLAND SYSTEM WHICH WILL BE USED AS SEDIMENT TRAPS DURING CONSTRUCTION.

HISTORIC WEATHER DATA OBTAINED FROM WEATHER STATION: X

SCHEDULE OF MAJOR CONSTRUCTION OPERATIONS

1. THE SITE WILL BE EVALUATED TO ENSURE THAT ALL MEASURES ARE TAKEN TO MINIMIZE AND CONTROL EROSION. AS WORK IS PERFORMED, THE TIMING OF MAJOR CONSTRUCTION OPERATIONS WILL BE DOCUMENTED ON THE CONSTRUCTION GRADING AND STABILIZATION ACTIVITIES LOG.

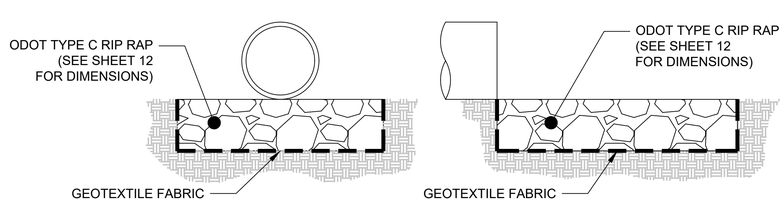

ROCK OUTLET PROTECTION DETAIL
NOT TO SCALE

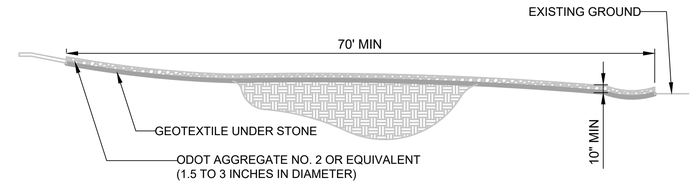

CROSS SECTION
NOT TO SCALE

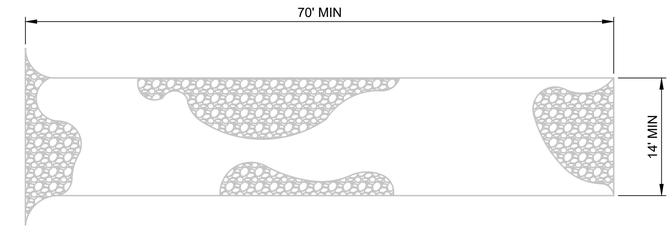

PLAN VIEW
NOT TO SCALE

NOTES:
1. A STABILIZED ENTRANCE PAD OF CRUSHED STONE SHALL BE LOCATED WHERE TRAFFIC WILL ENTER OR LEAVE THE CONSTRUCTION SITE.
2. GEOTEXTILE FABRIC SHALL BE INSTALLED ACROSS THE ENTRANCE WHEN NEEDED TO PROVIDE POSITIVE DRAINAGE.
3. GEOTEXTILE FABRIC SHALL BE USED AS A BASE FOR THE CONSTRUCTION ENTRANCE.
4. THE ENTRANCE SHALL BE MAINTAINED IN A CONDITION WHICH WILL PREVENT TRACKING OR FLOWING OF SEDIMENT INTO PUBLIC STREETS OR EXISTING PAVEMENTS. THIS MAY REQUIRE PERIODIC TOP DRESSING WITH ADDITIONAL STONE AS CONDITIONS WARRANT AND REPAIR OR CLEAN OUT OF ANY MEASURES USED TO TRAP SEDIMENT.
5. ANY SEDIMENT SPILLED, DROPPED, WASHED, OR TRACKED ONTO PUBLIC STREETS OR INTO STORM DRAINS MUST BE REMOVED IMMEDIATELY.
6. WHEN APPROPRIATE, WHEELS MUST BE CLEANED TO REMOVE SEDIMENT PRIOR TO ENTERING A PUBLIC STREET. WHEN WASHING IS REQUIRED, IT SHALL BE DONE IN AN AREA STABILIZED WITH CRUSHED STONE WHICH DRAINS INTO AN APPROVED SEDIMENT BASIN.
7. REMOVE CONSTRUCTION ENTRANCES AS SOON AS THEY ARE NO LONGER NEEDED TO PROVIDE ACCESS TO THE SITE. BRING THE DISTURBED AREA TO GRADE, AND STABILIZE IT USING APPROPRIATE PERMANENT STABILIZATION METHODS.

SPECIFICATIONS FOR GEOTEXTILE FABRIC	
MINIMUM TENSILE STRENGTH	200 POUNDS
MINIMUM PUNCTURE STRENGTH	80 POUNDS PER SQUARE INCH
MINIMUM TEAR STRENGTH	50 POUNDS
MINIMUM BURST STRENGTH	320 POUNDS PER SQUARE INCH
MINIMUM ELONGATION	20%
EQUIVALENT OPENING SIZE	< 0.6 MILLIMETERS
PERMITTIVITY	1 X 10^{-3} CENTIMETERS PER SECOND

TEMPORARY CONSTRUCTION ENTRANCE DETAIL

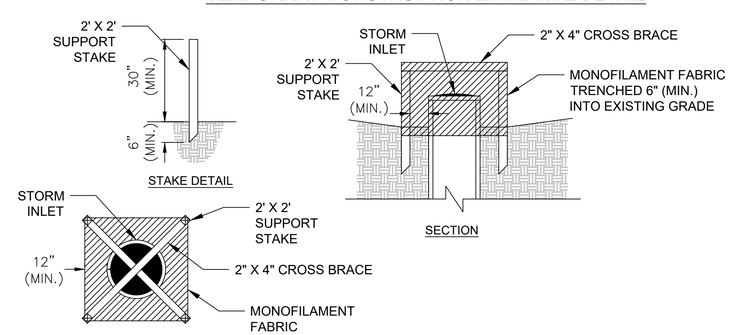

TEMPORARY INLET PROTECTION DETAIL
NOT TO SCALE

NOTES:
1. CONTRACTOR MAY PROPOSE ALTERNATE INLET PROTECTION FOR APPROVAL BY THE OWNER/ENGINEER.

PREPARED BY
MAD SCIENTIST ASSOCIATES LLC

PREPARED FOR

SYCAMORE CREEK PARK POND ENHANCEMENT

500 HEREFORD DR
PICKERINGTON
FAIRFIELD COUNTY, OH

REVISIONS #	DATE	DESCRIPTION	INIT

DATE: AUGUST 10, 2026
DRAWN BY: RBK / LMS
CHECKED BY: LMS / MAD
SHEET TITLE: SWPPP DETAILS
SHEET NUMBER: 11/14

TYP POND EDGE CROSS SECTION
WITH STONE SLABS
(NOT TO SCALE)

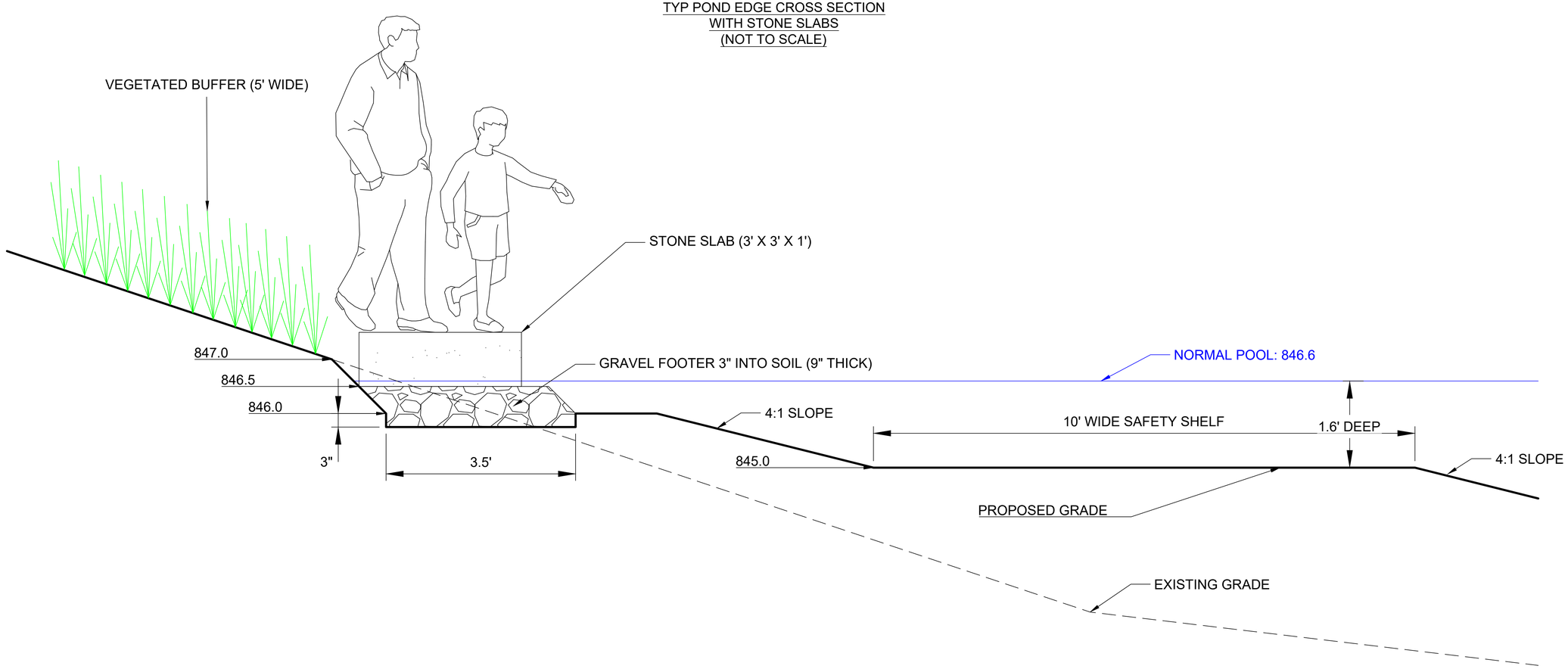

TYP POND EDGE CROSS SECTION
WITH RIPRAP
(NOT TO SCALE)

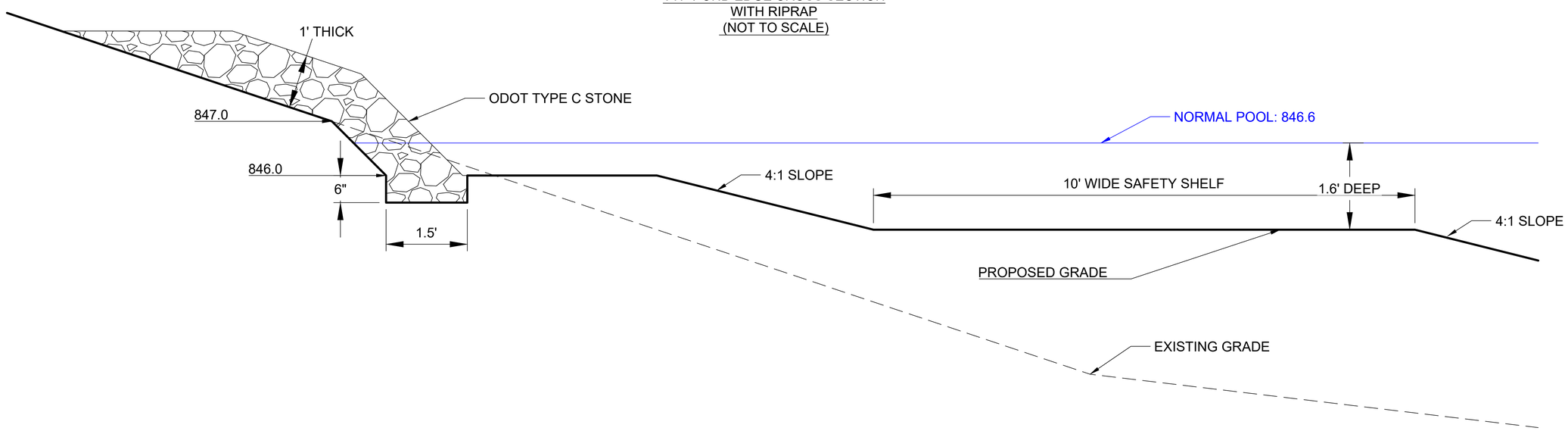

PREPARED BY

MAD SCIENTIST ASSOCIATES LLC

PREPARED FOR

SYCAMORE CREEK PARK POND ENHANCEMENT

500 HEREFORD DR
PICKERINGTON
FAIRFIELD COUNTY, OH

REVISIONS #	DATE	DESCRIPTION	INIT

DATE
AUGUST 10, 2026

DRAWN BY
RBK / LMS

CHECKED BY
LMS / MAD

SHEET TITLE
POND EDGE DETAILS

SHEET NUMBER
12 / 14

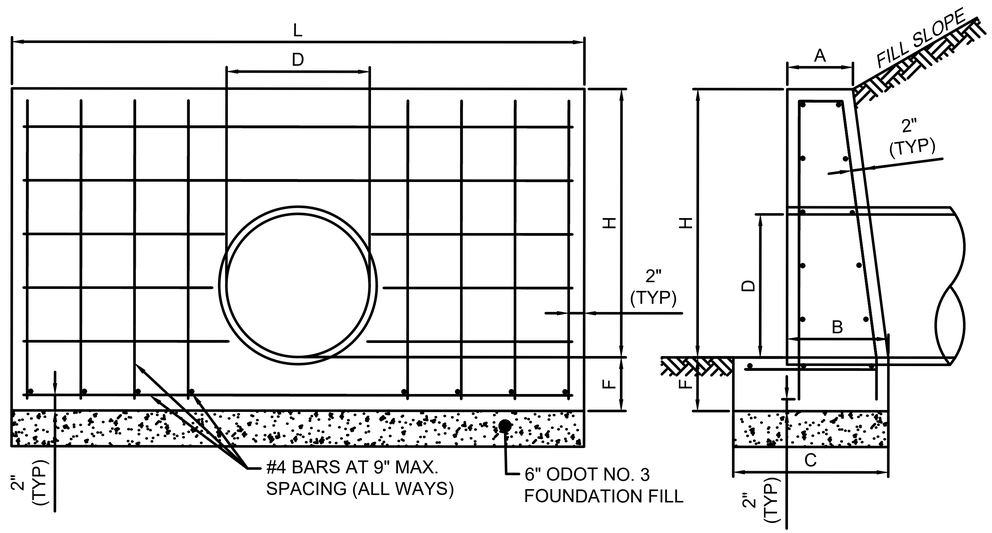

FRONT VIEW

SIDE VIEW

CONCRETE HEADWALL DETAIL
NOT TO SCALE

STRUCTURE	D	A	B	C	F	H	L
HW1	24"	0'–11"	1'–6"	2'–2"	0'–9"	3'–9"	8'–0"
HW2	36"	1'–0"	2'–0"	2'–9"	0'–9"	4'–9"	12'–0"
HW3	36"	1'–0"	2'–0"	2'–9"	0'–9"	4'–9"	12'–0"
HW4	36"	1'–0"	2'–0"	2'–9"	0'–9"	4'–9"	12'–0"
HW5	36"	1'–0"	2'–0"	2'–9"	0'–9"	4'–9"	12'–0"

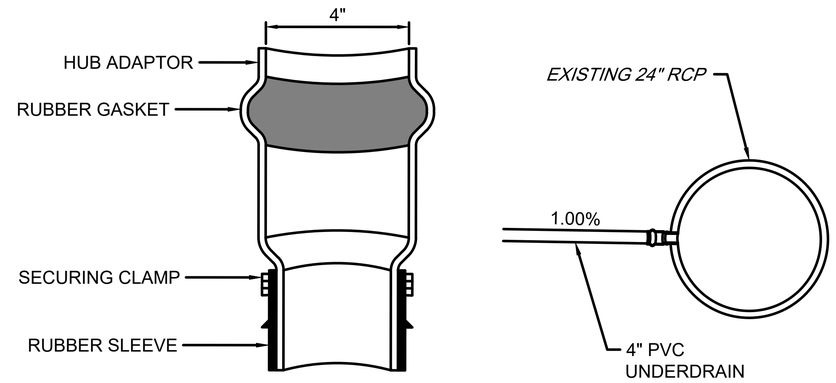

NOTES:
1. INSERTA-TEE® TO BE INSTALLED PER MANUFACTURER'S RECOMMENDATIONS.

INSERTA-TEE® DETAIL
NOT TO SCALE

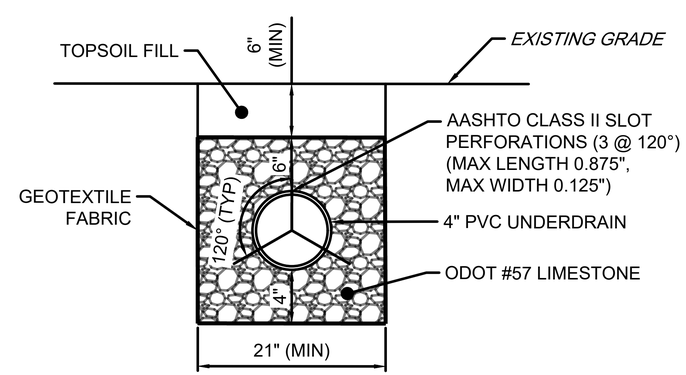

PERFORATED UNDERDRAIN DETAIL
NOT TO SCALE

PREPARED BY
MAD SCIENTIST ASSOCIATES LLC

PREPARED FOR

SYCAMORE CREEK PARK POND ENHANCEMENT

500 HEREFORD DR
PICKERINGTON
FAIRFIELD COUNTY, OH

REVISIONS #	DATE	DESCRIPTION	INIT

DATE
AUGUST 10, 2026

DRAWN BY
RBK / LMS

CHECKED BY
LMS / MAD

SHEET TITLE
CULVERT DETAILS

SHEET NUMBER
13 / 14

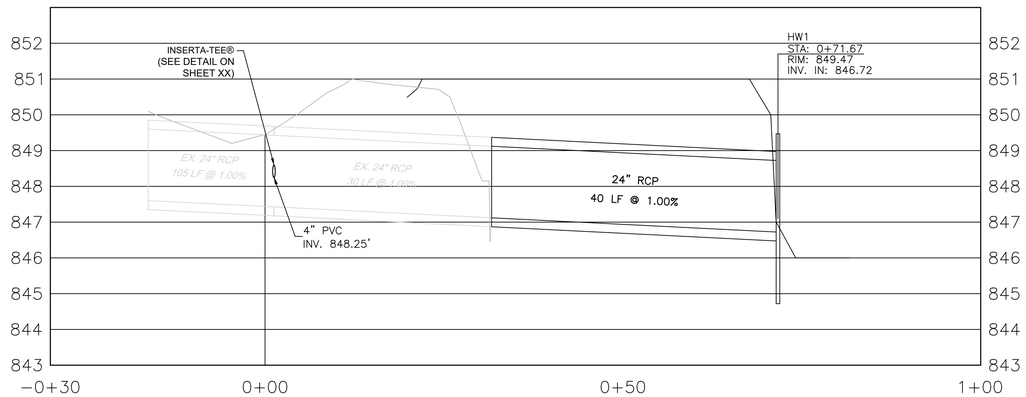

NW Culvert Extension

Horizontal Scale: 1" = 10'
Vertical Scale: 1" = 2'

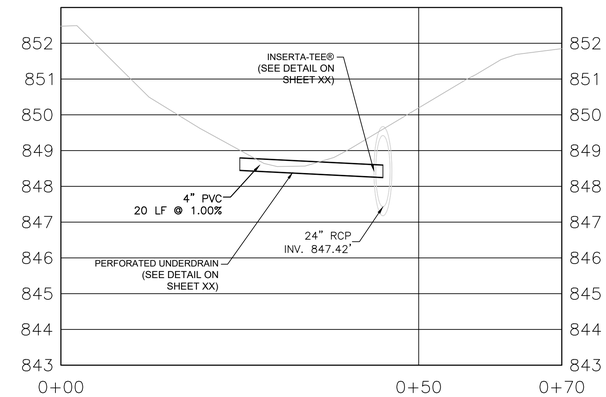

NW Underdrain

Horizontal Scale: 1" = 10'
Vertical Scale: 1" = 2'

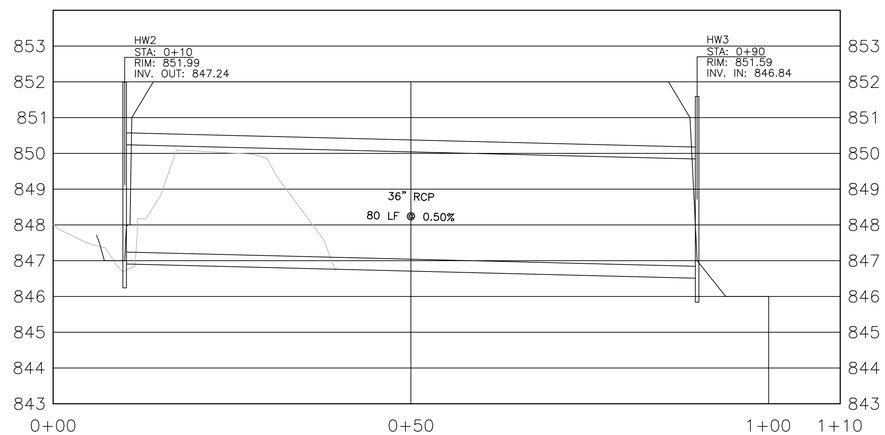

SW Culvert

Horizontal Scale: 1" = 10'
Vertical Scale: 1" = 2'

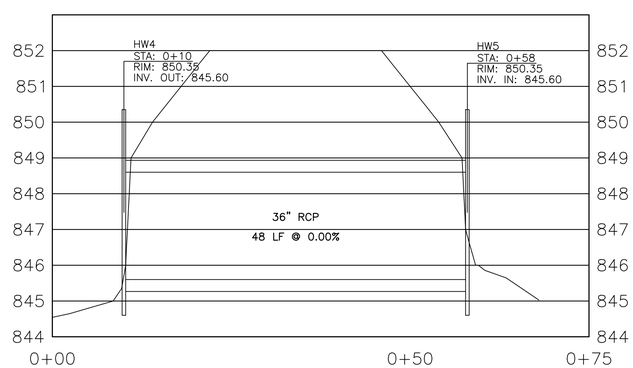

SE Culvert

Horizontal Scale: 1" = 10'
Vertical Scale: 1" = 2'

PREPARED BY

MAD SCIENTIST ASSOCIATES LLC

PREPARED FOR

SYCAMORE CREEK PARK POND ENHANCEMENT

500 HEREFORD DR
PICKERINGTON
FAIRFIELD COUNTY, OH

REVISIONS #	DATE	DESCRIPTION	INIT

DATE
AUGUST 10, 2026

DRAWN BY
RBK / LMS

CHECKED BY
LMS / MAD

SHEET TITLE
CULVERT PROFILES

SHEET NUMBER
14/14

SYCAMORE CREEK PARK BOARDWALK

GENERAL NOTES

GENERAL

1. THIS STRUCTURE HAS BEEN DESIGNED IN ACCORDANCE WITH THE PROJECT DESIGN PROFESSIONAL'S PLAN LAYOUT AND GUIDELINES. SUITABILITY FOR ACCESS AND INTENDED USAGE SHALL BE THE RESPONSIBILITY OF THE ARCHITECT.

2. VEHICULAR ACCESS LARGER THAN THE DESIGN LIVE LOAD SHALL BE LIMITED BY PERMANENT PHYSICAL MEANS.

3. PRIOR TO CONSTRUCTION THE CONTRACTOR SHALL VERIFY ALL ELEVATIONS THROUGH THE PROJECT DESIGN PROFESSIONAL. PRIOR TO CONSTRUCTION, ALL FOUNDATION LOCATIONS SHALL BE STAKED BY THE SURVEYOR PER THE APPROVED DRAWINGS MARKED 'FOR CONSTRUCTION'.

4. ONLY PERMATRAK NORTH AMERICA MAY PROVIDE THE PRECAST STRUCTURE SHOWN ON THESE PLANS.

5. INSTALLER SHALL NOT CUT OR MODIFY ANY PERMATRAK COMPONENTS WITHOUT PERMATRAK'S APPROVAL.

6. THE INSTALLER IS RESPONSIBLE FOR THE APPROPRIATE MEANS AND METHODS FOR THIS PROJECT, INCLUDING ENSURING PROPER CONSTRUCTIBILITY OF ALL COMPONENTS SHOWN ON THESE PLANS. NO EQUIPMENT MAY BE OPERATED ON THE STRUCTURE, UNLESS NOTED OTHERWISE IN THE DESIGN DATA ON THIS SHEET.

7. A MATERIAL CHANGE TO THE BOARDWALK SYSTEM IS NOT ALLOWED AND NOT CONSIDERED AN EQUAL.

8. PRIOR TO CONSTRUCTION, ALL EXISTING UTILITIES, BUILDING LOCATIONS, EXISTING FOUNDATIONS AND TREE ROOTS (AS APPLICABLE) SHALL BE LOCATED TO VERIFY NO CONFLICTS EXIST WITH THE STRUCTURES SHOWN ON THESE PLANS.

DESIGN DATA

1. BOARDWALK SHALL BE DESIGNED IN ACCORDANCE WITH THE AASHTO LRFD BRIDGE DESIGN SPECIFICATIONS AND THE LRFD GUIDE SPECIFICATION FOR THE DESIGN OF PEDESTRIAN BRIDGES.

2. DESIGN LIVE LOAD: PEDESTRIAN LOADING - 90 PSF UNIFORM
VEHICULAR LOADING - H-5 (10,000 LB. DESIGN VEHICLE)

3. A HYDRAULIC ANALYSIS, INCLUDING SCOUR EVALUATION, HAS NOT BEEN PERFORMED BY PERMATRAK. THIS SCOPE IS THE RESPONSIBILITY OF THE DESIGN CONSULTANT.

4. ALL GEOTECHNICAL RECOMMENDATIONS CONTAINED IN THE REPORT OF SUBSURFACE INVESTIGATION SHALL BE FOLLOWED. REPORT "SUBSURFACE EXPLORATION AND GEOTECHNICAL ENGINEERING LETTER REPORT FOR SYCAMORE CREEK PARK POND ENHANCEMENTS" WAS DATED JULY 6TH, 2026 AND PRODUCED BY GEOTECHNICAL CONSULTANTS, INC. ALLOWABLE BEARING PRESSURE FOR DESIGN OF FOOTINGS IS 3000 PSF.

5. RAILING SHALL BE DESIGNED IN ACCORDANCE WITH THE IBC SPECIFICATIONS.

MATERIAL

1. FASTENERS, BOLTS AND HARDWARE SHALL BE GALVANIZED, FIBER REINFORCED POLYMER (FRP) OR GRADE 316 STAINLESS STEEL.

2. ALL REINFORCING SHALL BE UNCOATED GRADE 60 CONFORMING TO ASTM A615.

3. CAST-IN-PLACE CONCRETE SHALL HAVE A 28-DAY CONCRETE COMPRESSIVE STRENGTH OF 4000 PSI.

4. PRECAST COLOR: NATURAL CONCRETE, ADELAIDE GRAY, OR MELBOURNE TAN
PRECAST TREAD SURFACE TEXTURE: PERMAGRIP OR PERMAPLANK

QUALITY ASSURANCE SPECIFICATIONS

1. ACCEPTABILITY CRITERIA FOR TREADS AND CURBS (IF APPLICABLE): THE FINISHED VISIBLE (IN THE FINAL INSTALLED POSITION) SURFACE SHALL HAVE NO OBVIOUS IMPERFECTIONS OTHER THAN MINIMAL COLOR OR TEXTURE VARIATIONS FROM THE APPROVED SAMPLES OR EVIDENCE OF REPAIRS WHEN VIEWED IN GOOD TYPICAL DAYLIGHT ILLUMINATION WITH THE UNAIDED NAKED EYE AT A 20 FT. VIEWING DISTANCE. APPEARANCE OF THE SURFACE SHALL NOT BE EVALUATED WHEN LIGHT IS ILLUMINATING THE SURFACE FROM AN EXTREME ANGLE AS IT TENDS TO ACCENTUATE THE MINOR SURFACE IRREGULARITIES. THE FOLLOWING IS A LIST OF FINISH DEFECTS THAT SHALL BE PROPERLY REPAIRED, IF OBVIOUS WHEN VIEWED AT A 20 FT. DISTANCE. PATCHING (BY A TRAINED SKILLED CONCRETE REPAIR PERSON) IS AN ACCEPTABLE REPAIR METHOD.

   a. RAGGED OR IRREGULAR SURFACES.
   b. EXCESSIVE AIR VOIDS (COMMONLY CALLED BUG HOLES) LARGER THAN ¼ IN. EVIDENT ON THE TOP SURFACE OF THE TREAD OR CURBS (IF APPLICABLE).
   c. ADJACENT FLAT AND RETURN SURFACES WITH GREATER TEXTURE AND/OR COLOR
   DIFFERENCES THAN THE APPROVED SAMPLES OR MOCKUPS.
   d. CASTING AND/OR AGGREGATE SEGREGATION LINES EVIDENT FROM DIFFERENT CONCRETE PLACEMENT LIFTS AND CONSOLIDATION.
   e. VISIBLE MOLD JOINTS OR IRREGULAR SURFACES.
   f. RUST STAINS ON EXPOSED SURFACES.
   g. UNITS WITH EXCESSIVE VARIATION IN TEXTURE AND/OR COLOR FROM THE APPROVED SAMPLES, WITHIN THE UNIT OR COMPARED WITH ADJACENT UNITS.
   h. BLOCKING STAINS EVIDENT ON EXPOSED SURFACES.
   i. AREAS OF BACKUP CONCRETE BLEEDING THROUGH THE FACING CONCRETE.
   j. FOREIGN MATERIAL EMBEDDED IN THE SURFACE.
   k. VISIBLE REPAIRS AT A 20 FT. VIEWING DISTANCE.
   l. REINFORCEMENT SHADOW LINES.
   m. CRACKS VISIBLE AT A 20 FT. VIEWING DISTANCE.

PROJECT COMPONENTS

SUPPLIED BY PERMATRAK
PRECAST CONCRETE TREADS
PRECAST CONCRETE BEAMS
RUBBER SPACER PADS (BETWEEN TREADS)
RUBBER LEVELING PADS (BETWEEN TREAD AND BEAM)
ELASTOMERIC BEARING PADS (BETWEEN BEAM AND FOUNDATION)
SHIMS (LEVELING FOR PRECAST COMPONENTS)
3/4" Ø THREADED BARS WITH NUTS AND WASHERS (BEAM TO PIER CONNECTION)
CLIP ANGLE KITS (TREAD TO BEAM CONNECTION)
WEIGHT LIMIT SIGN(S) AND CONNECTION HARDWARE
SIKAFLEX SELF-LEVELING SEALANT
SIMPSON STRONG-TIE SET-3G (EPOXY ANCHORING SYSTEM)
PATCHING MATERIAL
PERMAPICKET RAILING AND CONNECTION HARDWARE

SUPPLIED BY CONTRACTOR
CAST-IN-PLACE CONCRETE
EXPANSION JOINT MATERIAL
UNREINFORCED CONCRETE SUBFOOTING (2500 PSI MIN)

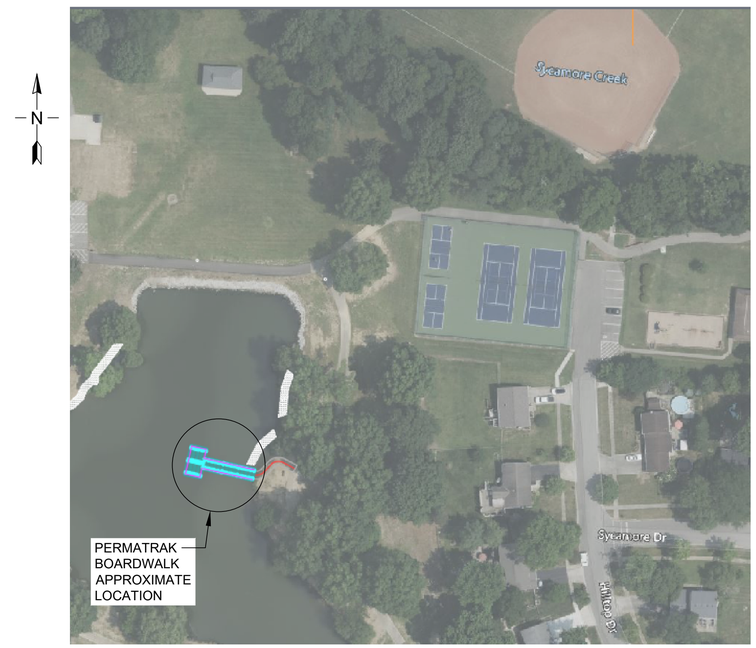

SITE VICINITY MAP
SCALE: N.T.S.

©2025 by PermaTrak® this drawing contains information that is proprietary to and property of PermaTrak® and shall be kept confidential. No duplication or distribution of this drawing may be made without the express written consent of PermaTrak® except for the limited purposes set forth in the contract between PermaTrak® and party for whom this drawing was made.

NO.	DATE	DESCRIPTION	BY:
6			
5			
4			
3			
2			
1			

PREPARED FOR:
MAD SCIENTIST ASSOCIATES

FOR BIDDING PURPOSES NOT FOR CONSTRUCTION

PermaTrak®
The Concrete Boardwalk Company
www.permatrak.com TEL: 877-332-7862

OFFICE LOCATIONS
NORTH CAROLINA
SOUTH CAROLINA
FLORIDA
OHIO
GEORGIA
TEXAS

PROJECT TITLE:
SYCAMORE CREEK PARK BOARDWALK
PICKERING, OHIO

JOB NUMBER:	2026-3060
DATE:	8-3-2026
DESIGNED BY:	KMB
DRAWN BY:	KMB
CHECKED BY:	KAS/AMC
SHEET NO.	PT01

Patented Product: U.S. Patent #8,302,362, #8,522,505, #9,096,975, #D940,912, #D925,068 & Other Patents Pending

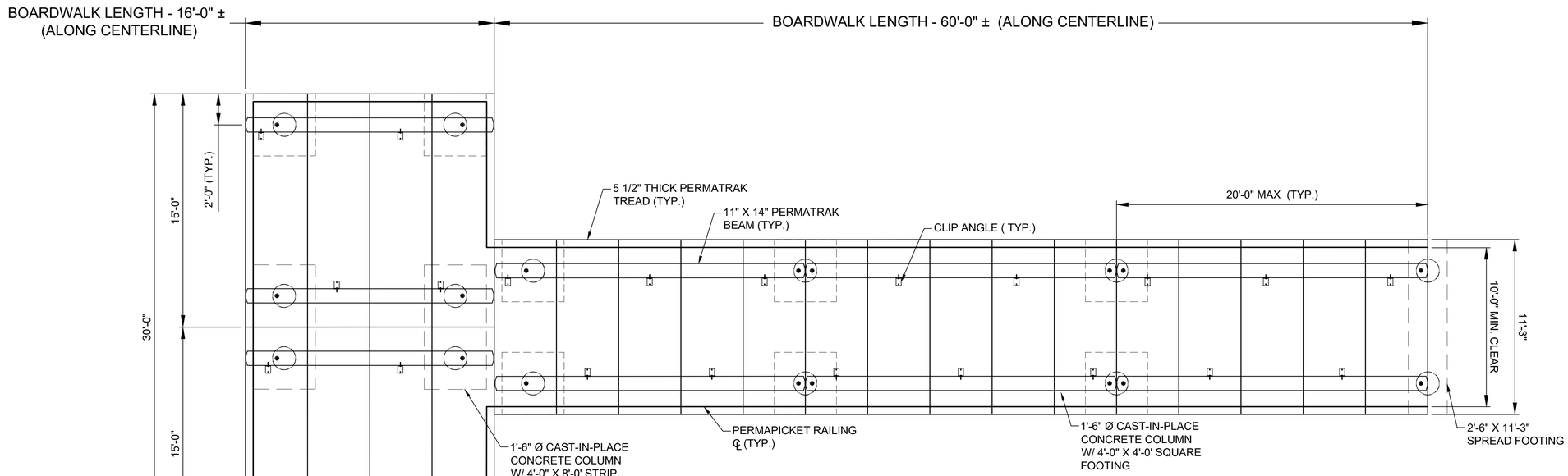

NOTE:
1. PLAN VIEW IS SHOWN FOR PRELIMINARY DISCUSSION PURPOSES NUMBER OF PRECAST COMPONENTS AND NUMBER OF PIERS SHOWN IN PLAN VIEW ARE PRELIMINARY AND SUBJECT TO CHANGE DUE TO SITE CONDITIONS, FIELD CONFLICTS AND/OR CURVED ALIGNMENT.

BOARDWALK PLAN

SCALE = 1/4" = 1'-0"

*APPROXIMATE NUMBER OF COMPONENTS

BOARDWALK SECTION	CENTERLINE	BOARDWALK AREA	# OF 4'-0" x 4'-0" FOOTINGS	# OF 4'-0" x 8'-0" FOOTINGS	# OF 2'-6" x 11'-3" FOOTINGS
APPROACH	60 LF	675 SQ. FT. +-	6	0	1
PLATFORM	16 LF	480 SQ. FT. +-	4	2	0
TOTALS	76 LF	1155 SQ. FT. +-	10	2	1

*QUANTITIES SHOWN IN TABLES ARE APPROXIMATE AND SUBJECT TO CHANGE.

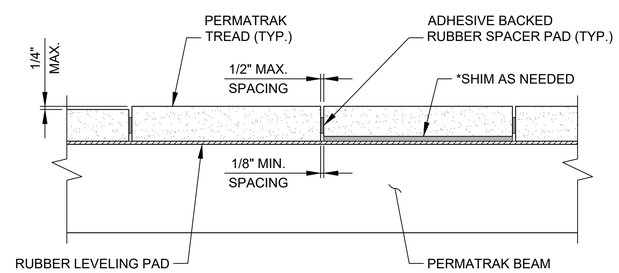

*NOTE:
DUE TO TOLERANCES AND VARIANCE IN PRECAST PRODUCTION AND INSTALLATION ACCURACY, SHIMS MAY BE NEEDED. COMPOSITE SHIMS OR ADDITIONAL RUBBER LEVELING PADS MAY BE USED FOR SHIMMING.

TYPICAL SHIM (UNDER TREAD) & TREAD SPACING DETAIL

SCALE: N.T.S.

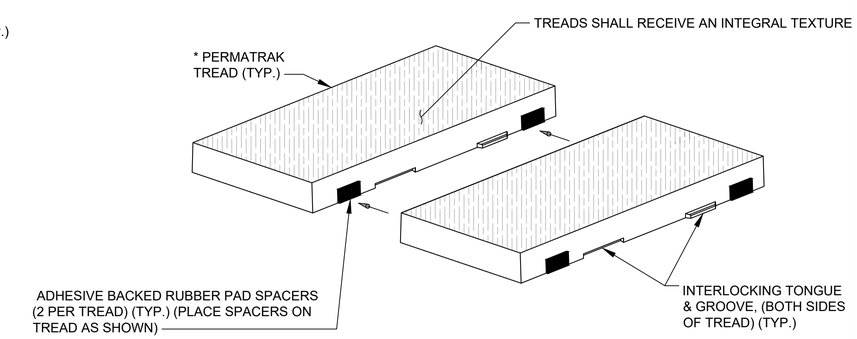

TYPICAL TREAD RUBBER SPACING DETAIL

SCALE: NOT TO SCALE

©2025 by PermaTrak® this drawing contains information that is proprietary to and property of PermaTrak® and shall be kept confidential. No duplication or distribution of this drawing may be made without the express written consent of PermaTrak® except for the limited purposes set forth in the contract between PermaTrak® and party for whom this drawing was made.

NO.	DATE	DESCRIPTION	BY:
6			
5			
4			
3			
2			
1			

PREPARED FOR:
MAD SCIENTIST ASSOCIATES

FOR BIDDING PURPOSES
NOT FOR CONSTRUCTION

PermaTrak®
The Concrete Boardwalk Company
www.permatrak.com TEL: 877-332-7862

OFFICE LOCATIONS
NORTH CAROLINA
SOUTH CAROLINA
FLORIDA
OHIO
GEORGIA
TEXAS

PROJECT TITLE:
SYCAMORE CREEK PARK
BOARDWALK
PICKERING, OHIO

JOB NUMBER: 2026-3060
DATE: 8-3-2026
DESIGNED BY: KMB
DRAWN BY: KMB
CHECKED BY: KAS/AMC
SHEET NO. PT02

Patented Product: U.S. Patent #8,302,362, #8,522,505, #9,096,975, #D940,912, #D925,068 & Other Patents Pending

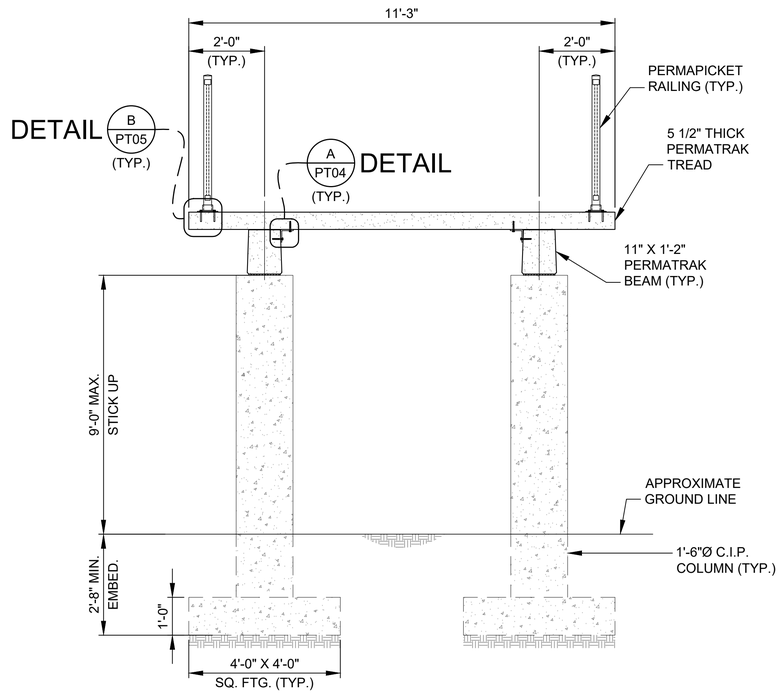

TYPICAL SECTION AT APPROACH

SCALE: 1/2" = 1'-0"

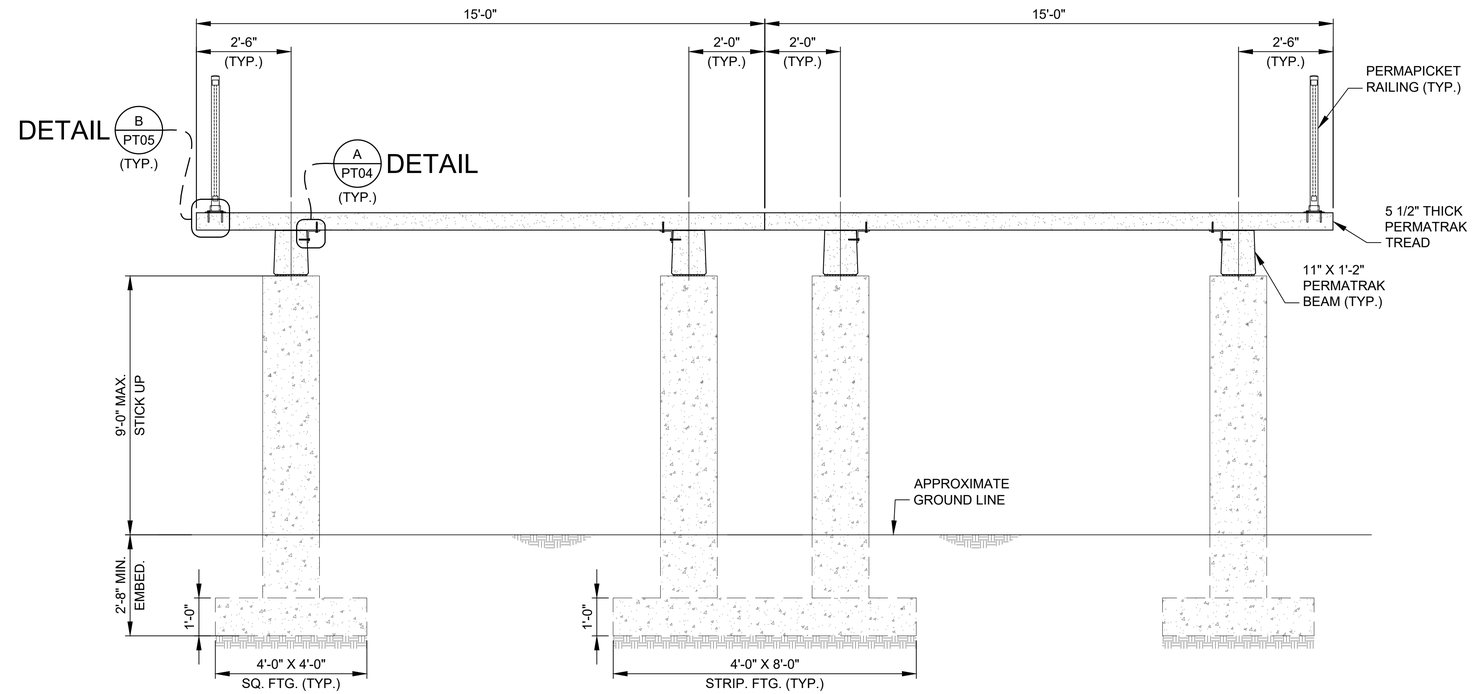

TYPICAL SECTION AT PLATFORM

SCALE: 1/2" = 1'-0"

©2025 by PermaTrak® this drawing contains information that is proprietary to and property of PermaTrak® and shall be kept confidential. No duplication or distribution of this drawing may be made without the express written consent of PermaTrak® except for the limited purposes set forth in the contract between PermaTrak® and party for whom this drawing was made.

NO.	DATE	DESCRIPTION	BY:
6			
5			
4			
3			
2			
1			

PREPARED FOR:
MAD SCIENTIST ASSOCIATES

FOR BIDDING PURPOSES NOT FOR CONSTRUCTION

PermaTrak® The Concrete Boardwalk Company

www.permatrak.com TEL: 877-332-7862

OFFICE LOCATIONS
NORTH CAROLINA
SOUTH CAROLINA
FLORIDA
OHIO
GEORGIA
TEXAS

PROJECT TITLE:
SYCAMORE CREEK PARK BOARDWALK
PICKERING, OHIO

JOB NUMBER: 2026-3060
DATE: 8-3-2026
DESIGNED BY: KMB
DRAWN BY: KMB
CHECKED BY: KAS/AMC
SHEET NO. PT03

Patented Product: U.S. Patent #8,302,362, #8,522,505, #9,096,975, #D940,912, #D925,068 & Other Patents Pending

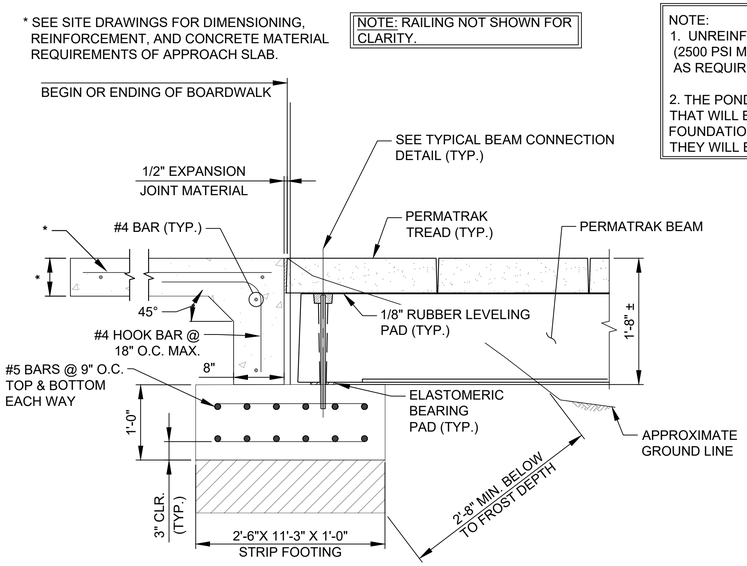

TYPICAL APPROACH DETAIL

SCALE: 1" = 1'-0"

NOTE:
1. UNREINFORCED CONCRETE PAD (2500 PSI MIN. COMPRESSIVE STRENGTH) AS REQUIRED

2. THE POND MAY HAVE A CLAY LINER THAT WILL BE PENETRATED BY THE FOUNDATION AND IF REPAIRS ARE NEEDED THEY WILL BE ADDRESSED BY CHANGE ORDER.

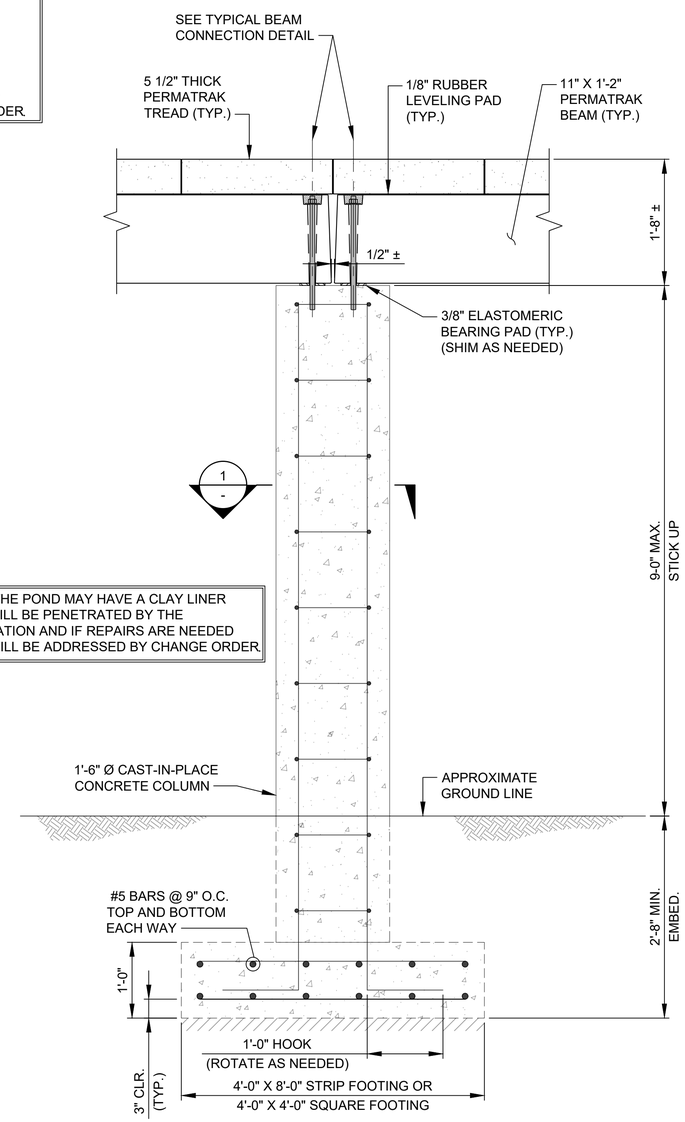

TYPICAL PIER CONNECTION DETAIL

SCALE: 1" = 1'-0"

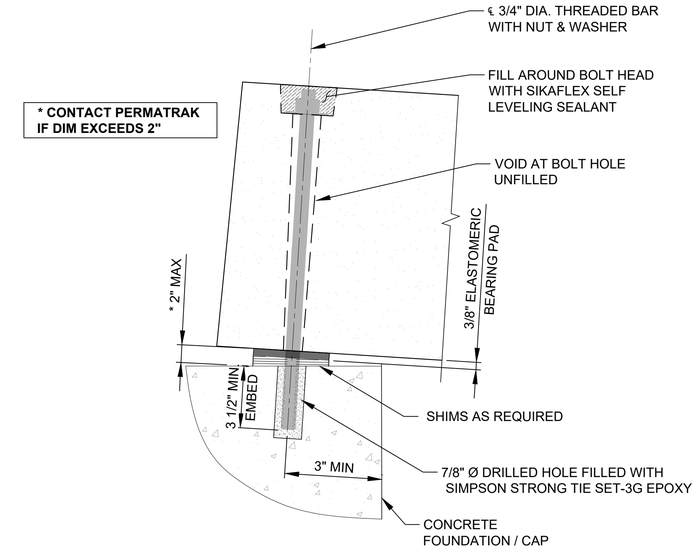

TYPICAL BEAM TO CONCRETE FOUNDATION/CAP CONNECTION DETAIL

SCALE: NOT TO SCALE

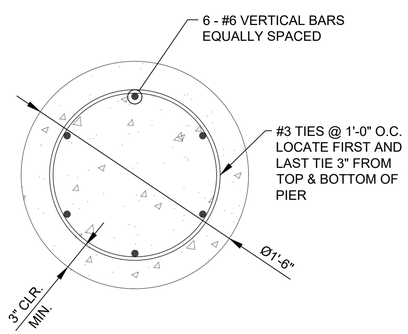

1 - SECTION

SCALE: 1 1/2" = 1'-0"

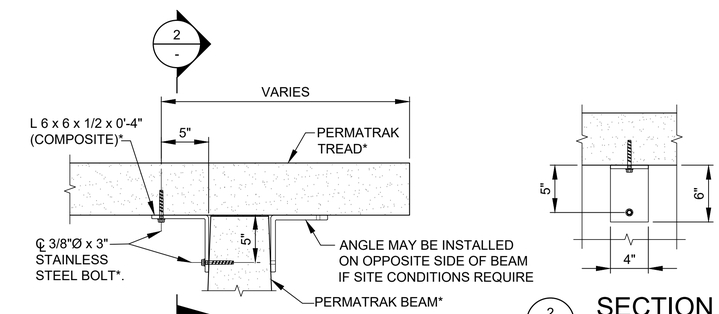

2 - SECTION

SCALE: N.T.S.

NOTES:
1. ALL HOLES IN PRECAST SHALL BE DRILLED BY CONTRACTOR.
2. DRILLED HOLES IN PRECAST SHALL BE 3/8"Ø AND INSTALLED PER MANUFACTURER INSTALLATION REQUIREMENTS.
3. * INDICATES SUPPLIED BY PERMATRAK.
4. ONE (1) CLIP ANGLE IS REQUIRED PER TREAD. LOCATION OF CLIP ANGLE ON TREAD SHALL ALTERNATE SIDES FROM TREAD TO TREAD. (SEE PLAN VIEW ON PT02).

A - TREAD TO BEAM CONNECTION

SCALE: N.T.S.

©2025 by PermaTrak® this drawing contains information that is proprietary to and property of PermaTrak® and shall be kept confidential. No duplication or distribution of this drawing may be made without the express written consent of PermaTrak® except for the limited purposes set forth in the contract between PermaTrak® and party for whom this drawing was made.

NO.	DATE	DESCRIPTION	BY:
6			
5			
4			
3			
2			
1			

PREPARED FOR:
MAD SCIENTIST ASSOCIATES

FOR BIDDING PURPOSES NOT FOR CONSTRUCTION

PermaTrak® The Concrete Boardwalk Company

www.permatrak.com TEL: 877-332-7862

OFFICE LOCATIONS
NORTH CAROLINA
SOUTH CAROLINA
FLORIDA
OHIO
GEORGIA
TEXAS

PROJECT TITLE:
SYCAMORE CREEK PARK BOARDWALK
PICKERING, OHIO

JOB NUMBER: 2026-3060
DATE: 8-3-2026
DESIGNED BY: KMB
DRAWN BY: KMB
CHECKED BY: KAS/AMC
SHEET NO. PT04

Patented Product: U.S. Patent #8,302,362, #8,522,505, #9,096,975, #D940,912, #D925,068 & Other Patents Pending

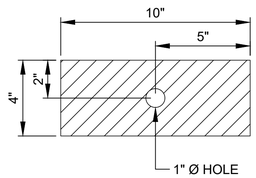

ELASTOMERIC PAD PLAN

SCALE: 3" = 1'-0"

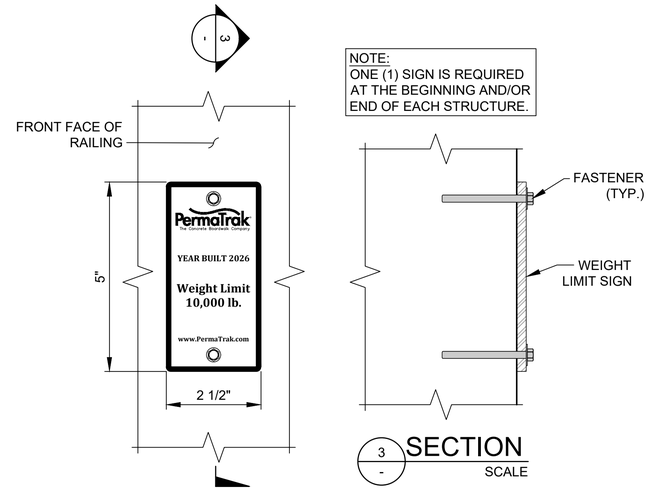

NOTE:
ONE (1) SIGN IS REQUIRED AT THE BEGINNING AND/OR END OF EACH STRUCTURE.

PERMATRAK WEIGHT LIMIT SIGN

SCALE: N.T.S.

NOTES:
1) ONE (1) CLIP ANGLE IS REQUIRED PER TREAD. LOCATION OF CLIP ANGLE ON TREAD SHALL ALTERNATE SIDES FROM TREAD TO TREAD AS SHOWN.
2) CLIP ANGLES SHALL BE CENTERED ON TREAD AS SHOWN.
3) RAILING NOT SHOWN FOR CLARITY.

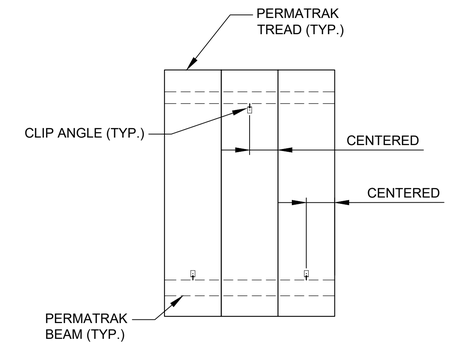

TYPICAL CLIP ANGLE LOCATION PLAN

APPLIES TO ALL TREADS

NOTE:
1. ALL HOLES IN PRECAST SHALL BE DRILLED BY CONTRACTOR.
2. DRILLED HOLES IN PRECAST SHALL BE 3/8" Ø AND INSTALLED PER MANUFACTURER INSTALLATION REQUIREMENTS.

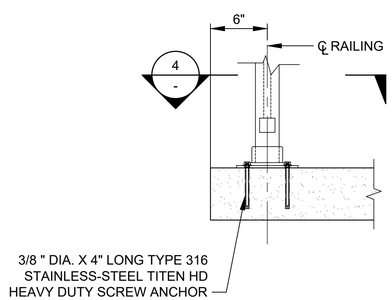

B
-
PERMAPICKET DETAIL

SCALE: 1 1/2" = 1'-0"

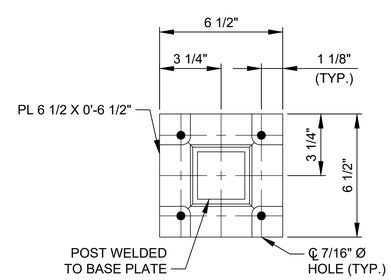

4
-
PERMAPICKET SECTION

SCALE: 3" = 1'-0"

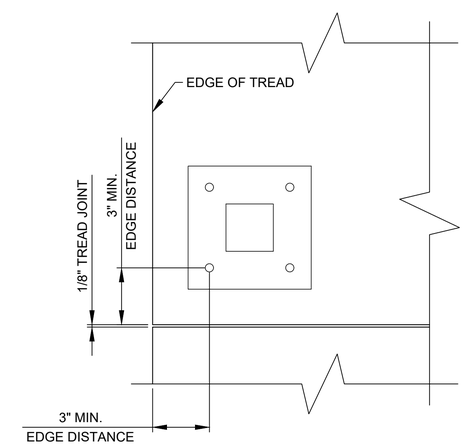

NOTES:

1. EDGE DISTANCE SHOWN IN THE DETAILS ON THIS SHEET ARE PROVIDED AS STRUCTURAL MINIMUMS. THE RAILING INSTALLER IS RESPONSIBLE FOR ENSURING THAT MINIMUM CLEARANCE IS MAINTAINED WHILE INSTALLING THE RAILING SYSTEM.

2. ANY DAMAGE TO TREADS DURING FIELD DRILLING OF THE RAILING CONNECTION TO THE PERMATRAK TREADS IS THE RESPONSIBILITY OF THE RAILING INSTALLER.

TYPICAL FIELD DRILL DETAIL

SCALE: N.T.S.

©2025 by PermaTrak® this drawing contains information that is proprietary to and property of PermaTrak® and shall be kept confidential. No duplication or distribution of this drawing may be made without the express written consent of PermaTrak® except for the limited purposes set forth in the contract between PermaTrak® and party for whom this drawing was made.

NO.	DATE	DESCRIPTION	BY:
6			
5			
4			
3			
2			
1			

PREPARED FOR:
MAD SCIENTIST ASSOCIATES

FOR BIDDING PURPOSES
NOT FOR CONSTRUCTION

PermaTrak®
The Concrete Boardwalk Company

www.permatrak.com TEL: 877-332-7862

OFFICE LOCATIONS
NORTH CAROLINA
SOUTH CAROLINA
FLORIDA
OHIO
GEORGIA
TEXAS

PROJECT TITLE:
SYCAMORE CREEK PARK BOARDWALK
PICKERING, OHIO

JOB NUMBER:	2026-3060
DATE:	8-3-2026
DESIGNED BY:	KMB
DRAWN BY:	KMB
CHECKED BY:	KAS/AMC
SHEET NO.	PT05

Patented Product: U.S. Patent #8,302,362, #8,522,505, #9,096,975, #D940,912, #D925,068 & Other Patents Pending

ELEVATED PRECAST CONCRETE BOARDWALK PROJECT SPECIFICATIONS

V4.1 UPDATED SEPTEMBER 2023

PRECAST CONCRETE BOARDWALK SYSTEM

PART 1-GENERAL

1.1 SUMMARY

A. These specifications are for a precast concrete boardwalk and shall be regarded as minimum standards for this project. These specifications are based upon products designed and supplied by:

PermaTrak North America LLC
Ph: (864) 354-4870
Ph: 877-332-7862
www.permatrak.com
Contact: Mr. John Pyle
jpyle@permatrak.com

This item shall also include the design, specification, and construction of a railing and foundation system that is attached to the proposed boardwalk system.

1.2 MINIMUM STANDARDS: The selected boardwalk shall have the following minimum characteristics:

A. The precast system shall be designed as a modular flexible system allowing a prescribed settlement at pier locations. Joints shall be designed for such movement to occur without damage to the structural integrity of the system.

B. Boardwalk system (beams, treads, and curbs if applicable) must be reinforced precast concrete. A material change, including cast-in-place concrete, is not considered an equal to the design shown on the bid documents.

C. Walking surface (treads) shall be made of reinforced precast concrete, and supported by reinforced precast concrete beams. Where applicable, edges of treads will receive precast concrete curbs.

D. Walking surface (finish) of top surface of treads shall have a formliner finish with one of PermaTrak's standard textures. Texture must be integral with the concrete and shall not be an applied post pour wearing surface.

E. Precast concrete treads shall be structural load bearing elements and shall interlock with one another via a “tongue and groove” connection.

F. All precast shall consist of integrally colored concrete in a color selected by the owner from one of PermaTrak's “standard colors”. All color pigment shall meet ASTM C979 Standard Specification for Pigments for Integrally Colored Concrete.

G. DESIGN LOADS: See PT01 for pedestrian and vehicular design live loads.

H. Treads shall maintain a “boardwalk appearance”, specifically meaning each tread shall have a width: length ratio ranging from a minimum of 3:1 to a maximum of 14:1. Width is defined as the tread dimension perpendicular to the normal direction of travel. Length is defined as the tread dimension measured in the direction of travel.

I. Tread width shall be as noted on the contract drawings. Alignment should follow the horizontal and vertical alignment shown on the contract plans.

J. Connectors for curbs (if applicable) to treads shall not be visible to boardwalk users while viewed from the top of the walkway.

K. All tread-to-beam connectors shall be non-corrosive, and hidden from view. Metallic tread-to-beam connectors are not acceptable for this project.

L. Boardwalk supplier shall provide a field representative on site for a minimum of 2 days. Field representative shall be knowledgeable in the installation of precast concrete boardwalks.

1.3 QUALITY ASSURANCE

A. The contractor performing the installation of the pile foundations shall have installed piles of size and length similar to those shown on the plans for a minimum of three (3) years prior to the bid date for this project. The contractor shall submit a list containing at least three (3) projects completed in the last three (3) years on which the contractor has installed piles of a size and length similar to those shown on the plans. The list of projects shall contain names and phone numbers of owner's representatives who can verify the Contractor's participation on those projects.

B. Manufacturer Qualifications: Not less than 10 years experience in the actual production of precast products as described below.

1. Components shall be factory fabricated and engineered by single entity. This entity shall be registered to do business in the State of the project location.
2. Boardwalk supplier (Precaster) for the boardwalk shall have in-house color mixing facilities for color pigmentation.
3. Boardwalk supplier (Precaster) shall have either a minimum experience of 5 years or 50 boardwalk projects in design, production, and field consultation.
4. Boardwalk supplier (Precaster) must be certified by PCI or NPCA.
5. Precast components must be manufactured with the use of hot rolled steel skin in reinforced steel forms. Temporary (i.e., Timber) and/or single use forms are unacceptable unless approved in writing by the Boardwalk Engineer.

C. Acceptability Criteria for Treads and Curbs (if applicable): The finished visible (in the final installed position) surface shall have no obvious imperfections other than minimal color or texture variations from the approved samples or evidence of repairs when viewed in good typical daylight illumination with the unaided naked eye at a 20 ft. viewing distance. Appearance of the surface shall not be evaluated when light is illuminating the surface from an extreme angle as it tends to accentuate the minor surface irregularities. The following is a list of finish defects that shall be properly repaired, if obvious when viewed at a 20 ft. distance. Patching (by a trained skilled concrete repair person) is an acceptable repair method.

1. Ragged or irregular surfaces.
2. Excessive air voids (commonly called bug holes) larger than ¼ in. evident on the top surface of the tread or curbs (if applicable).
3. Adjacent flat and return surfaces with greater texture and/or color differences than the approved samples or mockups.
4. Casting and/or aggregate segregation lines evident from different concrete placement lifts and consolidation.
5. Visible mold joints or irregular surfaces.
6. Rust stains on exposed surfaces.
7. Units with excessive variation in texture and/or color from the approved samples, within the unit or compared with adjacent units.
8. Blocking stains evident on exposed surfaces.
9. Areas of backup concrete bleeding through the facing concrete.
10. Foreign material embedded in the surface.
11. Visible repairs at a 20 ft. viewing distance.
12. Reinforcement shadow lines.
13. Cracks visible at a 20 ft. viewings distance.

D. Installer Qualifications: Firm with 3 years experience in installation of systems similar in complexity to those required for this Project.

E. Mock-Up: Provide, if required by Architect/ Engineer, a mock-up for evaluation of the boardwalk showing the surface preparation techniques and application workmanship.

1. Finish areas designated by Architect / Engineer.
2. Do not proceed with remaining work until mock-up is accepted by Architect / Engineer.
3. Refinish mock-up area as required to produce acceptable work.

1.4 DESIGN

A. For applications requiring minimum disturbance due to tree roots or other existing objects specified by the Owner to be avoided during construction, the Boardwalk Manufacturer requires the Contractor or Engineer/Architect to provide a survey of the proposed boardwalk location identifying items of interest including tree roots that cannot be disturbed per the Owner.

B. The designer of the boardwalk, foundation and railing system shall be a qualified registered Professional Engineer licensed in the State of the project location and having a minimum of 20 years of experience in the design of concrete structures, foundation and railing systems.

C. The foundation design shown on the boardwalk drawings are based recommendations found in the geotechnical report entitled referenced on PT01 (if applicable).

A. DESIGN CRITERIA: The design of the boardwalk and railing system shall comply with the following guidelines:

1. AASHTO LRFD Guide Specifications for The Design of Pedestrian Bridges, 2nd Edition with 2015 Interim Revisions.
2. Latest Version of AASHTO LRFD Bridge Design Specifications for Highway Bridges.
3. Latest Version of American Concrete Institute - Building Code and Commentary.
4. In addition to the dead loads of the system, the structure shall be designed for the live loads defined in Section 1.2 G above.

1.5 SUBMISSIONS: Prior to the start of fabrication or construction, the Contractor shall submit to the Engineer a design package, which shall include, but is not limited to, the following:

A. FOR APPROVAL SUBMISSIONS: Prior to the start of fabrication or construction, the Contractor shall submit to the Engineer a design package, which shall include but not limited to the following:

1. DETAILED PLANS:
   a. PLAN VIEW: Full plan view of the boardwalk, foundation and railing system drawn to scale. The plan view must reflect the proposed horizontal alignment as shown on the design plans.
   b. PARTIAL ELEVATION VIEW (IF REQUESTED): Full elevation view of the boardwalk, railing and foundation system drawn to scale which reflect the actual vertical alignment. Elevation views shall indicate the elevation at the top and bottom of the boardwalk and foundation system components.
   c. DETAILS: Details of all boardwalk and railing system components and their connections such as the length, size and where changes occur; connections; etc.
   d. CODE REFERENCE: Design parameters used along with AASHTO references.

2. CONSTRUCTION SPECIFICATIONS:

   a. Construction methods specific to the boardwalk vendor chosen. Submittal requirements such as certification, quality and acceptance/rejection criteria shall be included. Details on connection of boardwalk units and foundation system such that assurance of uniform load transfer shall be checked.

B. FINAL SUBMISSION: Once a boardwalk, foundation and railing system design has been reviewed and accepted by the Owner, the Contractor shall submit the final plans. The designer of the boardwalk, foundation and railing system is responsible for the review of any drawings prepared for fabrication. One set of all approved shop drawings shall be submitted to the Engineer's permanent records.

C. SUBMITTALS: Product Data: Submit Manufacturer's technical product data for railing components and accessories.
Manufacturer to supply submittal drawings for approval to include the following:

1. Section-thru details.
2. Mounting methods.
3. Typical Elevations.
4. Key plan layout.

D. SHOP DRAWINGS: Shop drawings shall:

1. Be stamped by a licensed Professional Engineer in the State of the project location.
2. Show actual field conditions and true elevation and location supplied after field verification.
3. Clearly detail reinforcement in beams, treads and curbs including clear dimension from concrete edge, size and amount of rebar.
4. Clearly state concrete compressive strength, steel type and strength, and a listing of all component weights including lifting locations.

1.6 DELIVERY, STORAGE, AND HANDLING

A. Store products in manufacturer's unopened packaging until ready for installation.

B. Field Measurements: Where handrails and railings are indicated to fit to other construction, check actual dimensions of other construction by accurate field measurements before fabrication; show recorded measurements on final shop drawings:

1. Where field measurements cannot be made without delaying the railing fabrication and delivery, obtain guaranteed dimensions in writing by the Contractor and proceed with fabrication of products so as not to delay fabrication, delivery and installation.

C. Coordinate fabrication and delivery schedule of handrails with construction progress and sequence to avoid delay of railing installation.

1. Air entrained composed of Portland cement, fine and course aggregates, admixtures and water. The air-entraining feature may be obtained by the use of either an air entraining Portland cement or an air entraining admixture. The entrained air-content shall be not less than four percent or more than seven percent.

1.7 WARRANTY:

A. Contractor will be responsible for installation defects associated with the boardwalk and abutment components, foundation system, and railings for a period of 12 calendar months from the date of final acceptance by the Owner.

B. Boardwalk manufacturer shall warranty all precast concrete components against defects in material and workmanship for a period of 10 years.

C. Railing manufacturer shall warranty the railing against defects in materials and workmanship for a period of 12 months.

1.8 MEASUREMENT AND PAYMENT

A. Precast concrete boardwalk, railings, and foundations shall be paid for at the contract lump sum price as listed in the bid proposal for “Precast Concrete Boardwalk”. This price shall include all materials, equipment, labor and work necessary for and incidental to the design, construction, delivery, unloading, assembly, and placement of the boardwalk and foundation as shown in the contract plans including all railings on the superstructure.

PART 2-MATERIALS & TESTING

2.1 PRECAST CONCRETE: shall conform to the following:

A. The minimum compressive strength of the concrete shall be 4000 psi measured at 28 days.
B. All precast concrete shall contain structural steel reinforcement as designed by the Engineer of record.
C. All precast concrete components shall be air entrained composed of Portland cement, fine and course aggregates, admixtures and water. The air-entraining feature may be obtained by the use of either an air entraining Portland cement or an air entraining admixture. The entrained air-content shall be not less than four percent or more than seven percent.
D. All reinforcing steel shall be standard uncoated steel conforming to ASTM A615

PART 3 - EXECUTION

1.1 PRECAST CONCRETE BOARDWALK

A. Installation of the precast concrete boardwalk system and railings, if applicable, shall be performed in accordance to the approved plans and manufacturers installation instructions. Boardwalk manufacturer shall provide a field representative to review installation instructions with the Contractor and Engineer and to certify that the installation has been performed according to the approved drawings and manufacturer's instructions.

©2025 by PermaTrak® this drawing contains information that is proprietary to and property of PermaTrak® and shall be kept confidential. No duplication or distribution of this drawing may be made without the express written consent of PermaTrak® except for the limited purposes set forth in the contract between PermaTrak® and party for whom this drawing was made.

NO.	DATE	DESCRIPTION	BY:
6			
5			
4			
3			
2			
1			

PREPARED FOR:
MAD SCIENTIST ASSOCIATES

FOR BIDDING PURPOSES NOT FOR CONSTRUCTION

PermaTrak® The Concrete Boardwalk Company
www.permatrak.com TEL: 877-332-7862

OFFICE LOCATIONS
NORTH CAROLINA
SOUTH CAROLINA
FLORIDA
OHIO
GEORGIA
TEXAS

PROJECT TITLE:
SYCAMORE CREEK PARK BOARDWALK
PICKERING, OHIO

JOB NUMBER: 2026-3060
DATE: 8-3-2026
DESIGNED BY: KMB
DRAWN BY: KMB
CHECKED BY: KAS/AMC
SHEET NO. SPECS

Patented Product: U.S. Patent #8,302,362, #8,522,505, #9,096,975, #D940,912, #D925,068 & Other Patents Pending

8400VFX FOUNTAIN

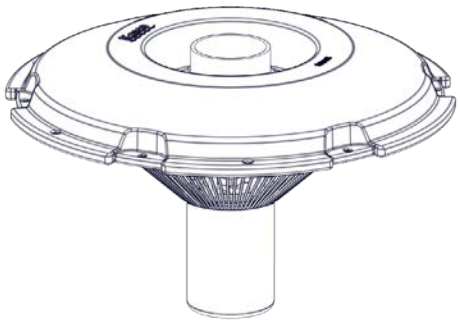

Dimensions

Float diameter: 37.5”

Unit height with float: 22.75”

OVERVIEW

- Complete package includes motor unit, control panel, float with screens, mooring lines, cable.
- Cable is UL, CSA & NEC rated for underwater use.
- Total package Listed by ETL to UL/CSA standards.
- Intake near surface allows for shallow operation
- Saltwater compatible
- Packaged for convenient shipping
- Optional lighting available

FLOAT

- UV-resistant polyethylene
- Single-piece float
- Series 300 stainless steel hardware
- Series 300 stainless steel top & bottom screens
- Thermoplastic protective bottom screen
- Three 50’ braided nylon mooring ropes

FOUNTAIN COMPONENTS

- Custom thermoplastic propeller
- UV-resistant thermoset composite draft tube
- UV-resistant thermoplastic deflector disc
- Series 300 stainless steel hardware

POWER CABLE

- 3 wire (L1, L2, G)
- Quick Disconnect standard on 12+ AWG cords (otherwise optional)
- Stainless steel strain relief on 12+ AWG cords
- 6’ flex sleeving protection standard (optional for entire cord length)

MOTOR UNIT

- 2HP, 208-240Vac operating voltage range, single phase
- Class B insulation
- 1750 RPM
- Oil cooled
- Continuous duty rated
- 17mm top and 20mm bottom bearings
- Thermal overload protection
- Fully unitized heavy-duty carbon-ceramic mechanical seal
- Series 300 stainless steel can
- Engineering grade thermoplastic top
- Sacrificial anode installed on 316 stainless shaft

CONTROL PANEL

- UL 508 Listed
- UL type 3R/4X thermoplastic enclosure
- Human-rated GFCI protection
- 24-hour mechanical timers (fountain & lights)
- Terminal block wiring
- 120V plug on 3’ power cord
- 4-wire power required (L1, L2, N, G)

800 Deere Rd. Prescott, WI 54021 | 715.262.4488 | sales@kascomarine.com | kascomarine.com

8400VFX FOUNTAIN

OVERVIEW

HP	Voltage / Phase / Hz	Running Amps	Lock Rotor Amps	Suggested Pond Size (SA)	Min. Depth of Operation (in.)
2	208-240V / 1 / 60	11	45	Up to 1*	20”

*Surface Acreage; also consider pond shape, depth, and oxygen demand.

MODEL SPECIFICATIONS

Model	Cord Length (ft.)	Cord Gauge	Number of Boxes
8400VFX050	50	14/3	3
8400VFX100	100	12/3	4
8400VFX150	150	12/3	4
8400VFX200	200	12/3	4
8400VFX250	250	12/3	4
8400VFX300	300	10/3	4
8400VFX400	400	8/3	4**
8400VFX500	500	8/3	4**

*500’ and longer cords available by custom order only.

**Ships motor freight only.

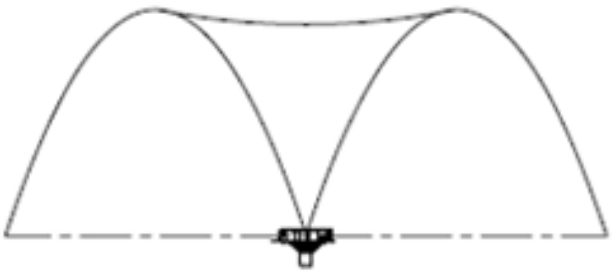

Pattern size: 8’ H x 32’ W

Easy assembly

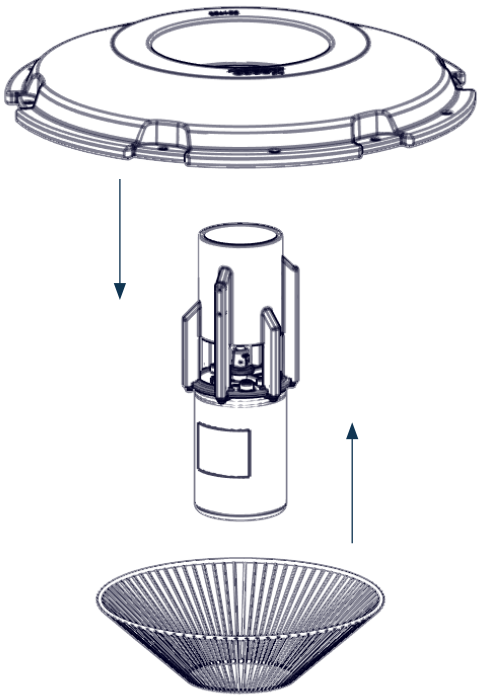

800 Deere Rd. Prescott, WI 54021 | 715.262.4488 | sales@kascomarine.com | kascomarine.com

2400AF SURFACE AERATOR

OVERVIEW

- Complete package includes assembled motor unit, float, three mooring lines, and power cable
- Operates in 17.5” (44.5cm) of water
- Total package Listed by ETL to UL/CSA standards
- Corrosion protection for saltwater applications
- Intake near surface allows for shallow operation
- Optional lighting

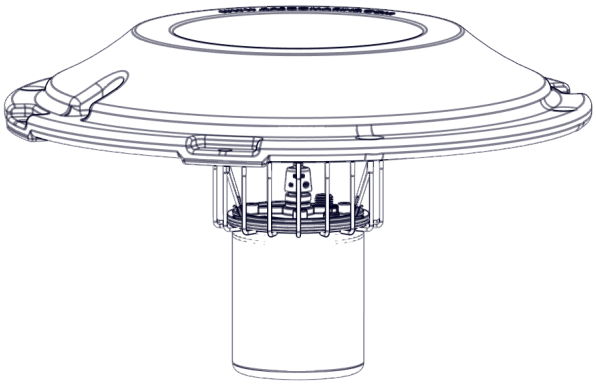

MOTOR UNIT

- 1/2HP, 120V, single phase
- 1750 RPM
- Oil cooled, continuous duty rated
- 17mm top and bottom bearings
- Thermal overload protection
- Fully unitized heavy-duty carbon ceramic mechanical seal
- Series 300 Austenitic stainless steel can with engineering grade thermoplastic top
- Sacrificial anode
- Custom-engineered UV-resistant thermoplastic 2 -blade propeller

POWER CABLE

- UL, CSA & NEC approved underwater rated cable
- 3 wire (L, N, G)
- Quick Disconnect standard on 12+ AWG cords, optional on smaller gauge cords
- Stainless steel strain relief on 12+ AWG cords
- 6’ flex sleeving protection standard; optional for entire cord length

FLOAT

- UV-resistant linear low-density polyethylene
- Single-piece float
- Series 300 coated stainless steel hardware
- Three 50’ braided nylon mooring ropes
- Optional coated stainless steel bottom screen

OPTIONAL CONTROL PANEL

- UL 508 Listed
- UL Type 3R/4X thermoplastic enclosure
- GFCI protection with 5ma trip level
- 24-hour mechanical aerator timer
- Photo eye for optional lighting
- 120V plug on 3’ power cord

800 Deere Rd. Prescott, WI 54021 | 715.262.4488 | support@kascomarine.com | kascomarine.com

2400AF SURFACE AERATOR

HP	Voltage / Phase / Hz	Running Amps	Locked Rotor Amps	Suggested Pond Size (SA)*	Min. Depth of Operation (in.)
1/2	120V / 1 / 60	5.7	12	Up to 1/2	17.5

*Surface Acreage; also consider pond shape, depth, and oxygen demand.

MODEL SPECIFICATIONS

Model	Cord Length	Cord Gauge
2400AF050	50 ft.	16/3
2400AF100	100 ft.	14/3
2400AF150	150 ft.	12/3
2400AF200	200 ft.	12/3

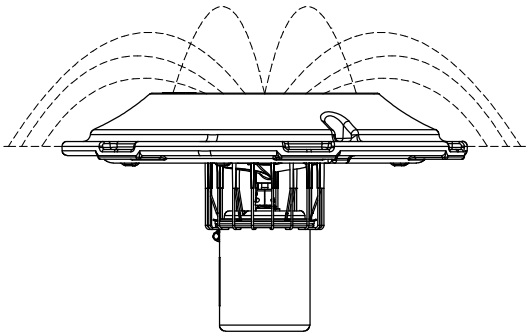

Unit + Pattern = 24” H x 48” W

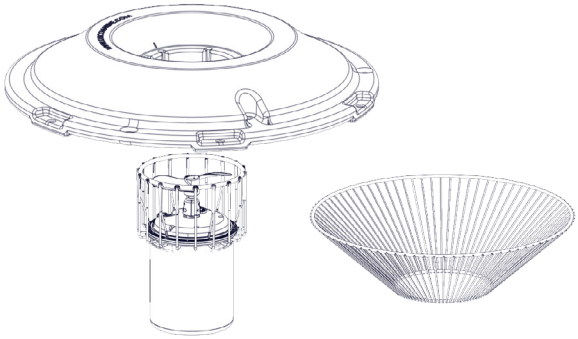

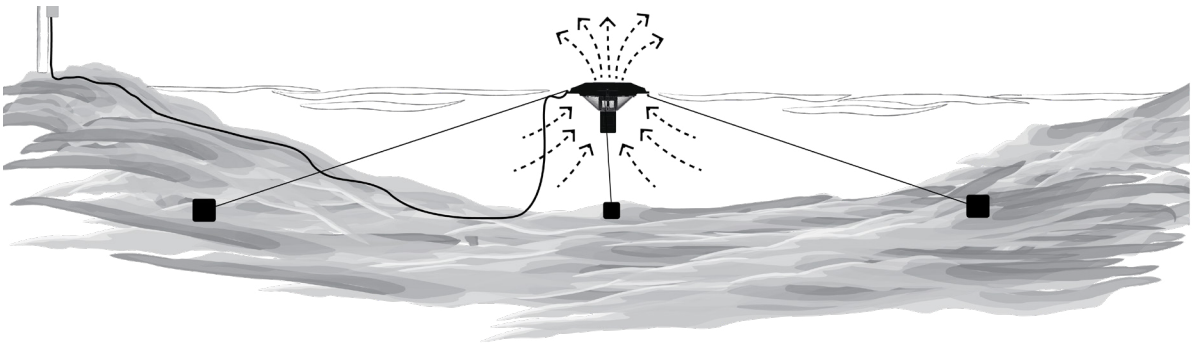

800 Deere Rd. Prescott, WI 54021 | 715.262.4488 | support@kascomarine.com | kascomarine.com