ISSUE FOR BID

SOUTH PARK PHASE TWO

150 S. MAYWOOD ROAD
LAKE FOREST, ILLINOIS 60045

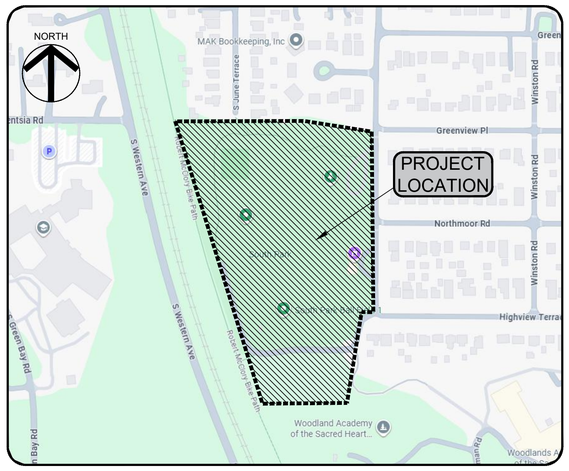

PROJECT LOCATION MAP
NO SCALE

CITY OF LAKE FOREST
800 N. FIELD DRIVE
LAKE FOREST, ILLINOIS 60045

It's smart. It's free. It's the law.

Call Before You Dig
JULIE ILLINOIS ONE-CALL SYSTEM

Call before you dig.
800.892.0123

GENERAL NOTES

1. BASEMAP INFORMATION OBTAINED FROM PLANS PREPARED BY VANDERSTAPPEN LAND SURVEYING, INC., RECEIVED SEPTEMBER 30, 2026.
2. VERIFY SITE CONDITIONS AND INFORMATION ON DRAWINGS. PROMPTLY REPORT ANY CONCEALED CONDITIONS, MISTAKES, DISCREPANCIES OR DEVIATIONS FROM THE INFORMATION SHOWN IN THE CONTRACT DOCUMENTS. THE OWNER IS NOT RESPONSIBLE FOR UNAUTHORIZED CHANGES OR EXTRA WORK REQUIRED TO CORRECT UNREPORTED DISCREPANCIES.
3. SECURE AND PAY FOR PERMITS, FEES AND INSPECTIONS NECESSARY FOR THE PROPER EXECUTION OF THIS WORK. COMPLY WITH CODES APPLICABLE TO THIS WORK.
4. REFER TO SPECIFICATIONS FOR ADDITIONAL CONDITIONS, STANDARDS AND NOTES.
5. THE PLANS AND SPECIFICATIONS ARE INTENDED TO BE COMPLETED ENTIRELY BY THE CONTRACTOR. UNLESS CLEARLY IDENTIFIED AS "BY OWNER," ALL WORK CONTAINED WITHIN IS THE RESPONSIBILITY OF THE GENERAL CONTRACTOR.

SHEET INDEX

#	SHEET
G1.0	TOPOGRAPHIC SURVEY
G1.2	WOODLAND SURVEY
L1.0	KEY PLAN
L2.0	SITE PREPARATION AND REMOVALS PLAN - NORTH
L2.1	SITE PREPARATION AND REMOVALS PLAN - SOUTH
L2.2	SITE PREPARATION AND REMOVALS PLAN - ENLARGEMENT
L3.0	LAYOUT AND MATERIALS PLAN - NORTH
L3.1	LAYOUT AND MATERIALS PLAN - SOUTH
L3.2	LAYOUT AND MATERIALS PLAN - ENGLARGMENT
L4.0	PLANTING PLAN - NORTH
L4.1	PLANTING PLAN - SOUTH
L4.2	PLANTING PLAN - ENLARGEMENT
L5.0	DETAILS
L5.1	DETAILS
L5.2	DETAILS
L5.3	DETAILS
L5.4	DETAILS
L5.5	DETAILS
L5.6	DETAILS
L5.7	DETAILS
L5.8	DETAILS
L5.9	DETAILS
L5.10	DETAILS
L5.11	DETAILS
L5.12	DETAILS
L5.13	DETAILS
L5.14	DETAILS
C1.0	SESC PLAN
C2.0	GRADING AND DRAINAGE PLAN OVERALL
C2.1	GRADING AND DRAINAGE PLAN ENLARGEMENT
C2.2	GRADING AND DRAINAGE PLAN ENLARGEMENTS
C2.3	GRADING AND DRAINAGE PLAN ENLARGEMENT
C3.0	UTILITY PLAN OVERALL
C3.1	UTILITY PLAN ENLARGEMENT
C3.2	UTILITY PLAN ENLARGEMENT
C4.0	CIVIL DETAILS
C4.1	CIVIL DETAILS
C4.2	CIVIL DETAILS
C4.3	CIVIL DETAILS
C4.4	CIVIL DETAILS
E1.0	ELECTRICAL PARTIAL SITE PLAN
E2.0	ELECTRICAL PARTIAL SITE PLAN
E3.0	ELECTRICAL DETAILS
E4.0	ELECTRICAL SCHEDULES

CONSULTANT INFORMATION

LANDSCAPE ARCHITECT — SHEETS: L-SERIES
RVi PLANNING + LANDSCAPE ARCHITECTURE
22 EAST CHICAGO AVENUE
SUITE 200A
NAPERVILLE, ILLINOIS 60540
T 630.961.1787

CIVIL ENGINEER — SHEETS C-SERIES
HEY AND ASSOCIATES, INC.
26575 W. COMMERCE DRIVE
SUITE 601
VOLO, ILLINOIS 60073
T 847.740.0888

ELECTRICAL ENGINEER — SHEETS: E-SERIES
NOVA ENGINEERING, PC
2338 S. CLINE AVENUE
SCHERERVILLE, INDIANA 46375
T 219.865.3352

RVi
22 East Chicago Avenue
Suite 200a
Naperville, IL 60540
Tel: 312.634.2100
www.rvilanning.com

PREPARED FOR
CITY OF LAKE FOREST

800 N. FIELD DRIVE
LAKE FOREST, ILLINOIS 60045

CONSULTANTS

CIVIL ENGINEER
HEY AND ASSOCIATES, INC.
26575 W. COMMERCE DRIVE
SUITE 601
VOLO, ILLINOIS 60073
T 847.740.0888

ELECTRICAL ENGINEER
NOVA ENGINEERING, PC
2338 S. CLINE AVENUE
SCHERERVILLE, INDIANA 46375
T 219.865.3352

SOUTH PARK PHASE TWO
ISSUE FOR BID
150 S. MAYWOOD RD.
LAKE FOREST, ILLINOIS 60045

PROJECT NO: 26000793
DATE: 10/28/2026
DRAWN: MDB/AMM
REVIEWED: LJL

OCTOBER 28, 2026
REVISIONS:
NO. DATE ISSUE

COVER PAGE

L0.0

01_ORIGINAL ISSUE

L:\2026\26000793 south park ph2\05 production\03 CD\01 current plans\26000793-COVER_southpark.dwg 10/28/2026 miranda.berger

TOPOGRAPHIC SURVEY

Vanderstappen Land Surveying, Inc.
www.vandersinc.com
1316 N. Madison St.
Woodstock, Illinois 60098
ph. 815-337-8310 fax 815-337-8314
"Always faithful to the property line"

PARCEL 1:
Lot 4 (excepting the Westerly 100.0 feet) of the Assessors Plat of the Northeast Quarter of Section 4, Township 43 North, Range 12 East of the Third Principal Meridian, according to the Plat thereof recorded October 11, 1871 in Book "A" of Plats, Page 8 in Lake County, Illinois, and also excepting that part of said Lot 4 lying within the Westerly 16.5 feet of Lot 5 in Schneider and Nahin's Second Addition to Northmoor Terrace, being a Subdivision of the East 21 rods of the North 25 rods of the West Half of Lot 2 in the Northeast Quarter of said Section 4, according to the Plat thereof recorded December 6, 1923, as Document No. 233269, in Book "M" of Plats, Page 43, in Lake County, Illinois.

PARCEL 2:
Lot 5 in Schneider and Nahin's Second Addition to Northmoor Terrace, being a Subdivision of the East 21 rods of the North 25 rods of the West Half of Lot 2 in the Northeast Quarter of said Section 4, according to the Plat thereof recorded December 6, 1923, as Document No. 233269, in Book "M" of Plats, Page 43, in Lake County, Illinois.

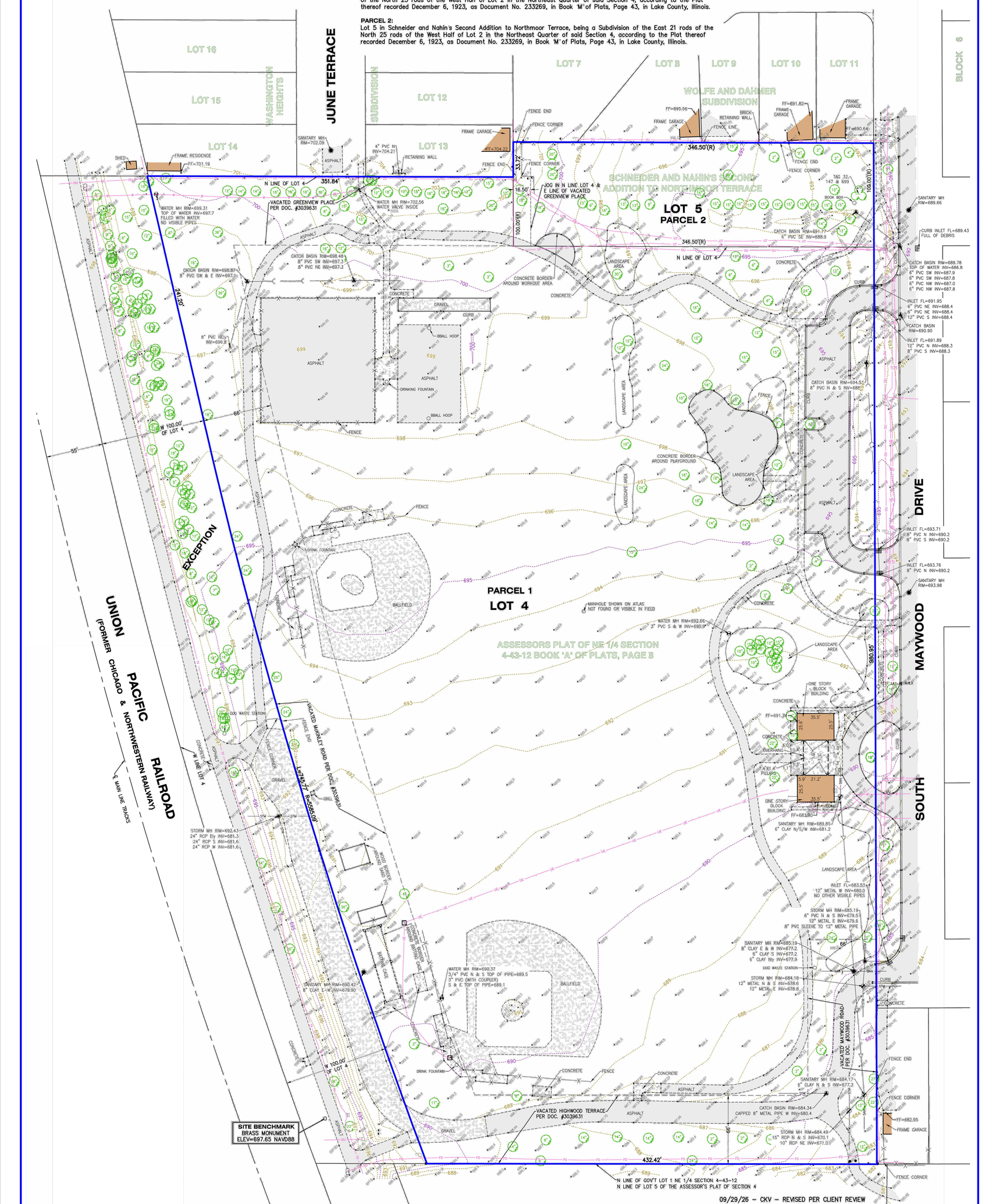

PROJECT BENCHMARK
NATIONAL GEODETIC
CONTROL STATION "LD013"
ELEV=670.23 NAVD88

40' 0' 40' 80'
SCALE: 1" = 40'

LEGEND

•	BOLLARD		GAS VALVE		TREE
CV	CABLE HANDHOLE		HANDHOLE UNKNOWN	TV	TV RISER
	CATCH BASIN		LIGHT		UTILITY POLE
	CURB INLET		MANHOLE		VALVE VAULT
	DOWN GUY		SANITARY MANHOLE		WATER SHUT-OFF
E	ELECTRIC METER		SEPTIC LID		WATER VALVE
	ELECTRIC OUTLET		SIGN	(R)	RECORD
	ELECTRIC RISER		STORM MANHOLE		
T	GAS METER		TELEPHONE RISER		

SAN — SAN — SANITARY
UG SAN — UG SAN — UNDERGROUND SANITARY
STM — STM — STORM
UG STM — UG STM — UNDERGROUND STORM
UE — UE — UNDERGROUND ELECTRIC
FO — FO — UNDERGROUND FIBER OPTIC
OH — OH — OVERHEAD UTILITY
UT — UT — UNDERGROUND TELEPHONE
TV — TV — UNDERGROUND TELEVISION
W — W — UNDERGROUND WATER

09/29/26 – CKV – REVISED PER CLIENT REVIEW
06/10/26 – CKV – LANDSCAPE AREAS

STATE OF ILLINOIS)
) S.S.
COUNTY OF McHENRY)

We, Vanderstappen Land Surveying, Inc. do hereby state that we have caused the above described property to be topographically surveyed and that the plat hereon drawn is a correct representation of said topography.

This professional service conforms to the current Illinois minimum standards for topographic surveys. This is not a Boundary Survey.

Dated at Woodstock, McHenry County, Illinois 05/07 A.D., 20 26.

Vanderstappen Land Surveying, Inc.
Design Firm No. 184-002792

ARTHUR P. GRITMACHER
035-003857
PROFESSIONAL LAND SURVEYOR
STATE OF ILLINOIS
EXP. 11/30/2028
WOODSTOCK, ILLINOIS

By: _____
Illinois Professional Land Surveyor No. 3857

G1.0 - TOPOGRAPHIC SURVEY

CLIENT: RM PLANNING & LANDSCAPE ARCHITECTURE
DRAWN BY: CHECKED BY: APG
SCALE: 1"=40' SEC. 4 T. 43 R. 12 E.
BASIS OF BEARING: IL EAST ZONE NAD83 (2011)
P.I.N.: **
JOB NO.: 260231 I.D. TPO
FIELDWORK COMP.: 4/14/26 BK. PG.
ALL DISTANCES SHOWN IN FEET AND DECIMAL PARTS THEREOF CORRECTED TO 68° F. REF: 230443

**P.I.N.:
16-04-202-019
16-04-202-020
16-04-200-012

Y:\PLATS\2026\0200-0399\260231_V-260231\260231-TPO GRID.dwg-Layout1-9/30/2026 11:35 AM

TOPOGRAPHIC EXHIBIT

PROFESSIONAL LAND SURVEYING, INC.
3080 OGDEN AVENUE SUITE 307
LISLE, ILLINOIS 60532
PHONE: 630-778-1757
PROF. DESIGN FIRM # 184-004196
E-MAIL: info@plslisle.com

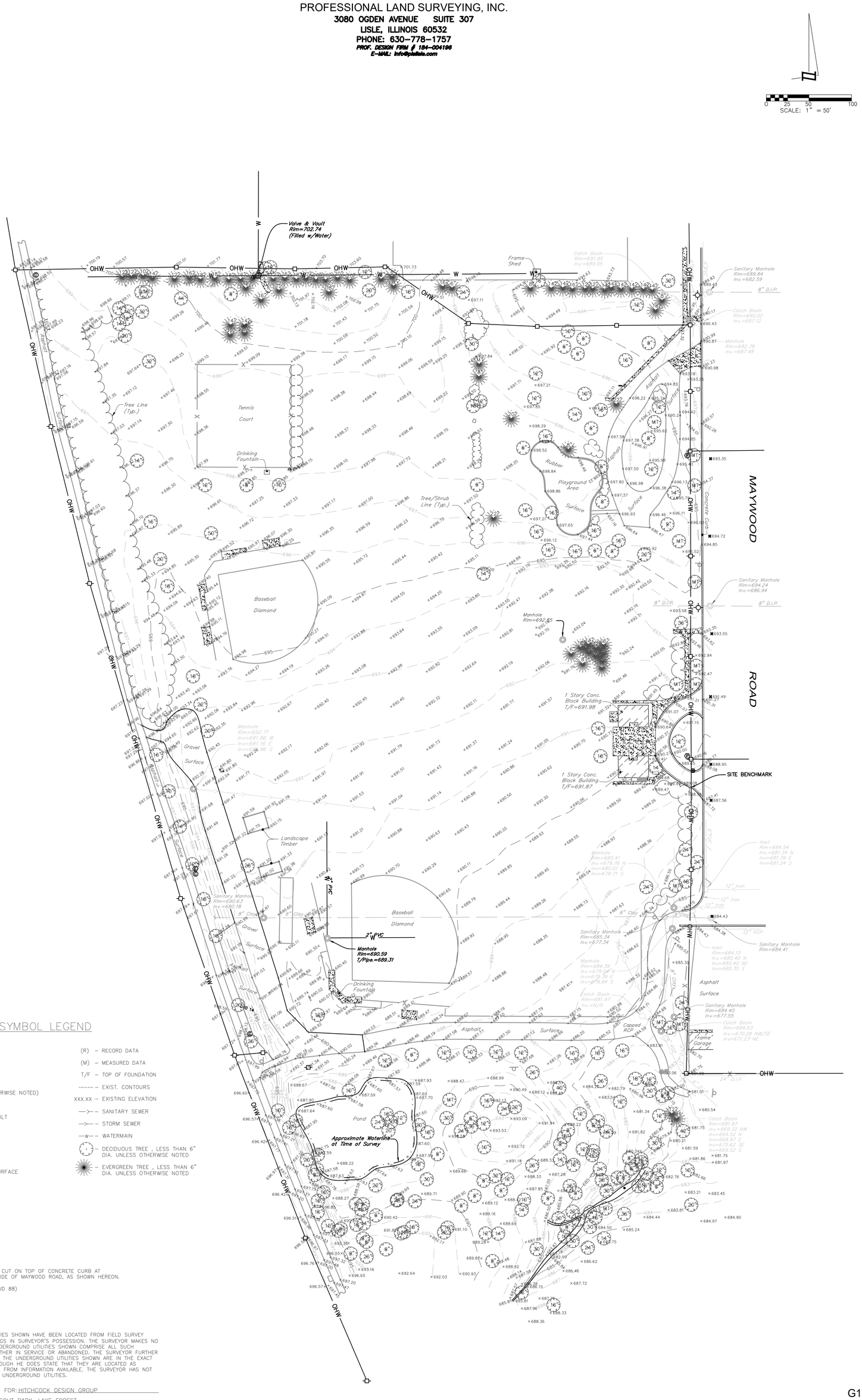

SYMBOL LEGEND

- ◎ – MANHOLE
- ○ – CATCHBASIN
- □ – INLET
- ⊗ – WATER VALVE (UNLESS OTHERWISE NOTED)
- – HYDRANT
- ◎ – VALVE & VAULT
- □ – POWER POLE
- ⊛ – BUFFALO BOX
- ▽ – STREET SIGN
- –x–x–x– – FENCE LINE
- ▨ – CONCRETE SURFACE

- (R) – RECORD DATA
- (M) – MEASURED DATA
- T/F – TOP OF FOUNDATION
- ------ – EXIST. CONTOURS
- XXX.XX – EXISTING ELEVATION
- —>— – SANITARY SEWER
- —>— – STORM SEWER
- —w— – WATERMAIN
- – DECIDUOUS TREE , LESS THAN 6" DIA. UNLESS OTHERWISE NOTED
- – EVERGREEN TREE , LESS THAN 6" DIA. UNLESS OTHERWISE NOTED

BENCHMARK

SITE BENCHMARK: CROSS CUT ON TOP OF CONCRETE CURB AT ENTRANCE ALONG WEST SIDE OF MAYWOOD ROAD, AS SHOWN HEREON.

ELEVATION = 688.74 (NAVD 88)

NOTES

THE UNDERGROUND UTILITIES SHOWN HAVE BEEN LOCATED FROM FIELD SURVEY INFORMATION AND DRAWINGS IN SURVEYOR'S POSSESSION. THE SURVEYOR MAKES NO GUARANTEE THAT THE UNDERGROUND UTILITIES SHOWN COMPRISE ALL SUCH UTILITIES IN THE AREA, EITHER IN SERVICE OR ABANDONED. THE SURVEYOR FURTHER DOES NOT WARRANT THAT THE UNDERGROUND UTILITIES SHOWN ARE IN THE EXACT LOCATION INDICATED ALTHOUGH HE DOES STATE THAT THEY ARE LOCATED AS ACCURATELY AS POSSIBLE FROM INFORMATION AVAILABLE. THE SURVEYOR HAS NOT PHYSICALLY LOCATED THE UNDERGROUND UTILITIES.

PREPARED FOR: HITCHCOCK DESIGN GROUP
ADDRESS: SOUT PARK, LAKE FOREST
BOOK & PG: 225-40 DATE: 7/18/2019 JOB NO: 1917384
DRAWN BY: JHH CHECK BY:
REVISED: 1/9/2020 ADDITIONAL TOPO AREA

G1.2 -
WOODLAND SURVEY

FIELD WORK COMPLETED AND DATED THIS 11TH DAY OF JULY, 2019.

DRAWING PATH: L:\2020\20000793 south park ph2\05 production\03 CD\01 current plans\G1.0 Topographic Survey.dwg

©2019 PLS INC., ALL RIGHTS RESERVED

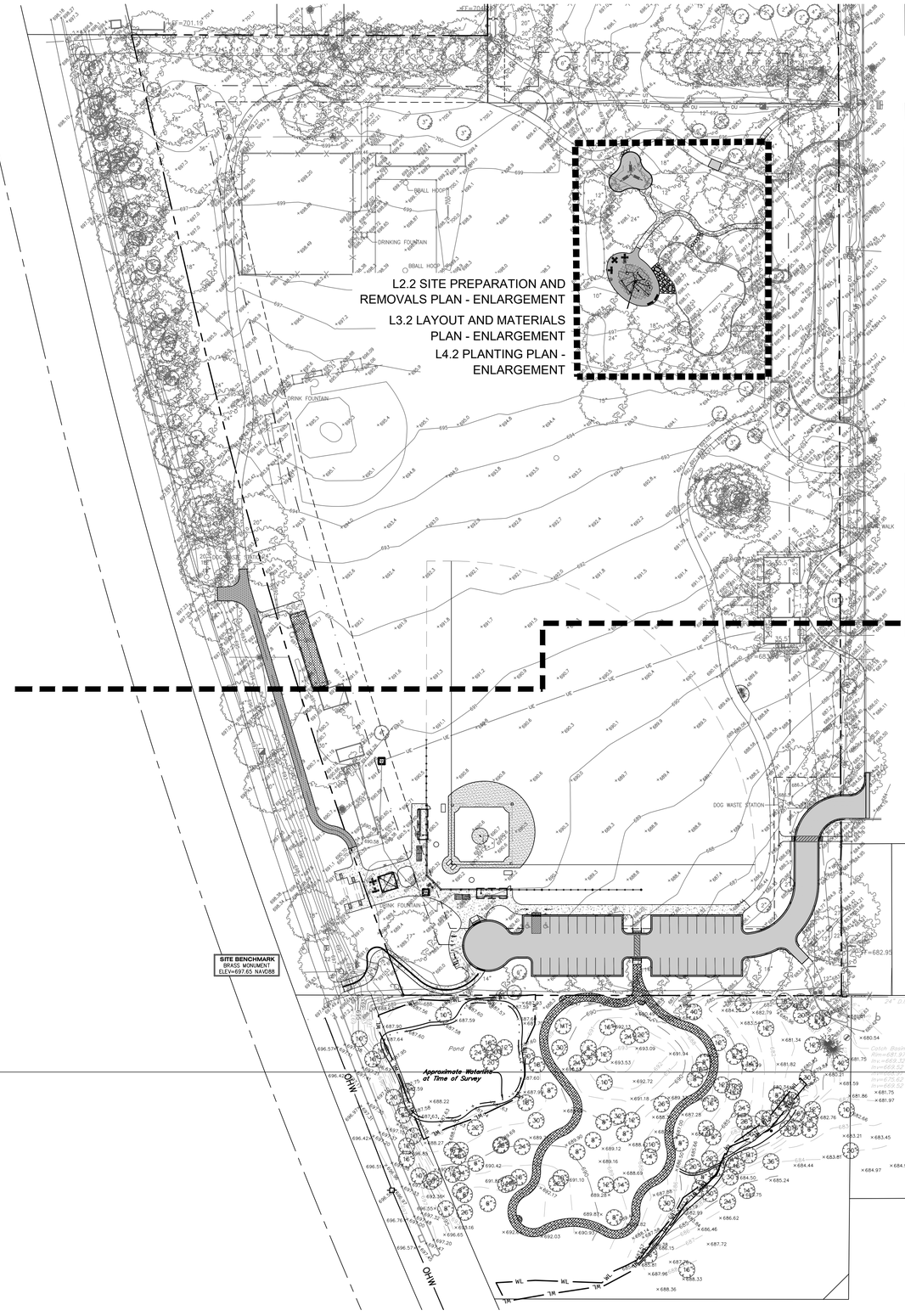

RVi
22 East Chicago Avenue
Suite 200a
Naperville, IL 60540
Tel: 312.634.2100
www.rvilanning.com

PREPARED FOR

CITY OF LAKE FOREST

800 N. FIELD DRIVE
LAKE FOREST, ILLINOIS 60045

CONSULTANTS

CIVIL ENGINEER
HEY AND ASSOCIATES, INC.
26575 W. COMMERCE DRIVE
SUITE 601
VOLO, ILLINOIS 60073
T 847.740.0888

ELECTRICAL ENGINEER
NOVA ENGINEERING, PC
2338 S. CLINE AVENUE
SCHERERVILLE, INDIANA 46375
T 219.865.3352

SOUTH PARK PHASE TWO

ISSUE FOR BID
150 S. MAYWOOD RD.
LAKE FOREST, ILLINOIS 60045

PROJECT NO:	26000793
DATE:	10/28/2026
DRAWN:	MDB/AMM
REVIEWED:	LJL

OCTOBER 28, 2026
REVISIONS:

NO.	DATE	ISSUE

KEY PLAN

L1.0

01_ORIGINAL ISSUE

L:\2026\26000793 south park ph2\05 production\03 CD\01 current plans\L1.0 Key Plan.dwg 10/28/2026 mirandi berger

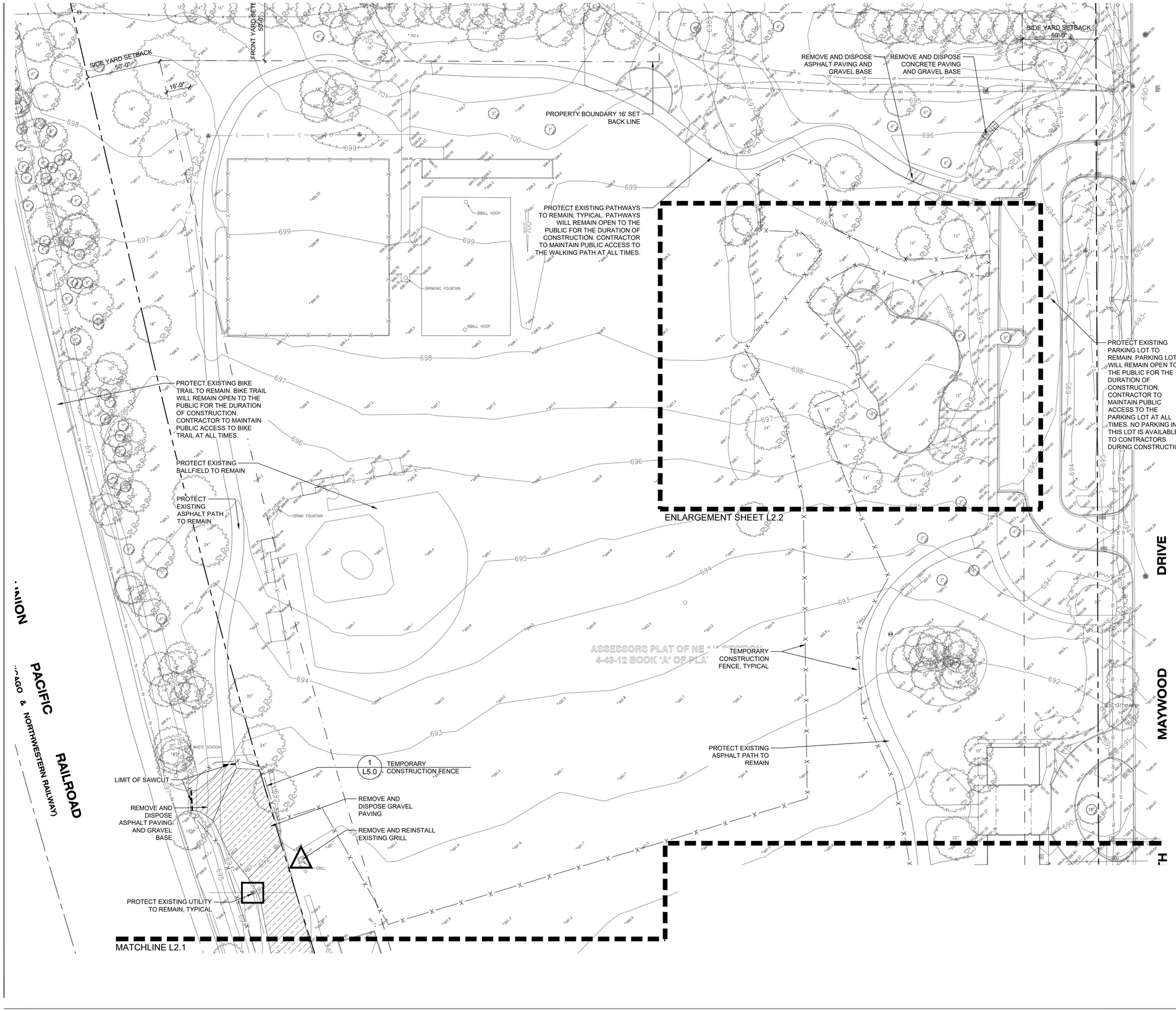

SITE PREPARATION AND REMOVALS NOTES

1. Contractor shall install construction fence at the limits of construction prior to beginning work. Maintain and adjust construction fencing as needed during progress of construction. Staging and construction access shall be approved by Owner.
2. Contractor shall install tree protection fencing as shown on the plans prior to beginning work. Maintain and adjust tree protection fencing as needed during progress of construction. Storage of materials, vehicular access, and all other construction activities are strictly prohibited within the limits of the tree protection fencing.
3. Plans indicate general location and limits of removals. Contractor shall perform removals only as necessary for construction of proposed improvements. No additional payments will be made for removals or restoration not required to construct the improvements as drawn and specified. Refer to Layout Plan for more specific information regarding proposed improvements and verify conditions in the field prior to performing removals.
4. Sawcut and remove concrete paving to nearest joint where indicated. All saw cuts required for removal items to be included in the unit cost of that particular pay item.
5. Tree stumps shall be ground to a minimum depth of 18" below existing grade or as required to properly perform the work.
6. Remove and dispose of turf where planting beds are designated. Refer to Planting Plan for limits of proposed landscape improvements.
7. Where turf or plantings are proposed in existing paved areas, remove all base material.
8. Remove all utilities designated for removal to extent required for improvements, unless otherwise noted. Cap ends of any remaining underground conduit and piping, and pull all electrical wire out at source.
9. Items indicated for Removal shall include complete removal of above grade item and below grade appurtances (foundations, urban fill, wiring, piping, etc.) including disposal off-site following applicable codes and ordinances, unless otherwise shown on the plans.
10. Items indicated as Remove and Salvage shall include careful protection, removal, and storage of items. For reinstall items, Contractor shall store during construction. All other Salvage items shall be delivered to location as indicated by owner unless otherwise shown on the plans.
11. Contractor to protect all existing utilities and all other site features not designated for removal. Contractor is responsible for replacing/repairing any existing utilities or other site features damaged during construction to the original condition at no cost to the Owner.
12. Contractor responsible for maintaining existing utility services (electrical, sanitary, storm) during construction unless otherwise indicated in the Contract Documents.
13. Contractor shall coordinate all work so public sidewalk remains open throughout construction.
14. Refer to civil and electrical plans for additional utility adjustments and removals.
15. Refer to specifications for additional conditions, standards and notes.

SITE PREPARATION AND REMOVALS LEGEND

- Remove and dispose concrete paving and gravel base. Remove subgrade material as needed.
- Remove and dispose asphalt paving and gravel base. Remove subgrade material as needed.
- Remove and dispose gravel paving. Remove subgrade material as needed.
- Clear and grub
- Tree Protection Fence
- Item to be removed
- Item to be protected
- Curb to be removed
- Limit of sawcut
- Silt Fence
- Construction Fence
- Fence to be removed
- Item to be relocated

0 15' 30' 60'
SCALE: 1" = 30'-0"

RVi
22 East Chicago Avenue
Suite 200a
Naperville, IL 60540
Tel: 312.634.2100
www.rvilanning.com

PREPARED FOR
CITY OF LAKE FOREST

800 N. FIELD DRIVE
LAKE FOREST, ILLINOIS 60045

CONSULTANTS

CIVIL ENGINEER
HEY AND ASSOCIATES, INC.
26575 W. COMMERCE DRIVE
SUITE 601
VOLO, ILLINOIS 60073
T 847.740.0888

ELECTRICAL ENGINEER
NOVA ENGINEERING, PC
2338 S. CLINE AVENUE
SCHERERVILLE, INDIANA 46375
T 219.865.3352

SOUTH PARK PHASE TWO

ISSUE FOR BID
150 S. MAYWOOD RD.
LAKE FOREST, ILLINOIS 60045

PROJECT NO:	26000793
DATE:	10/28/2026
DRAWN:	MDB/AMM
REVIEWED:	LJL

OCTOBER 28, 2026
REVISIONS:

NO.	DATE	ISSUE

SITE PREPARATION AND REMOVALS PLAN - NORTH

L2.0

01_ORIGINAL ISSUE

L:\2026\26000793 south park ph2\05 production\03 CD\01 current plans\L2.0 Site Preparation and Removals Plan.dwg 10/28/2026 mirandi berger

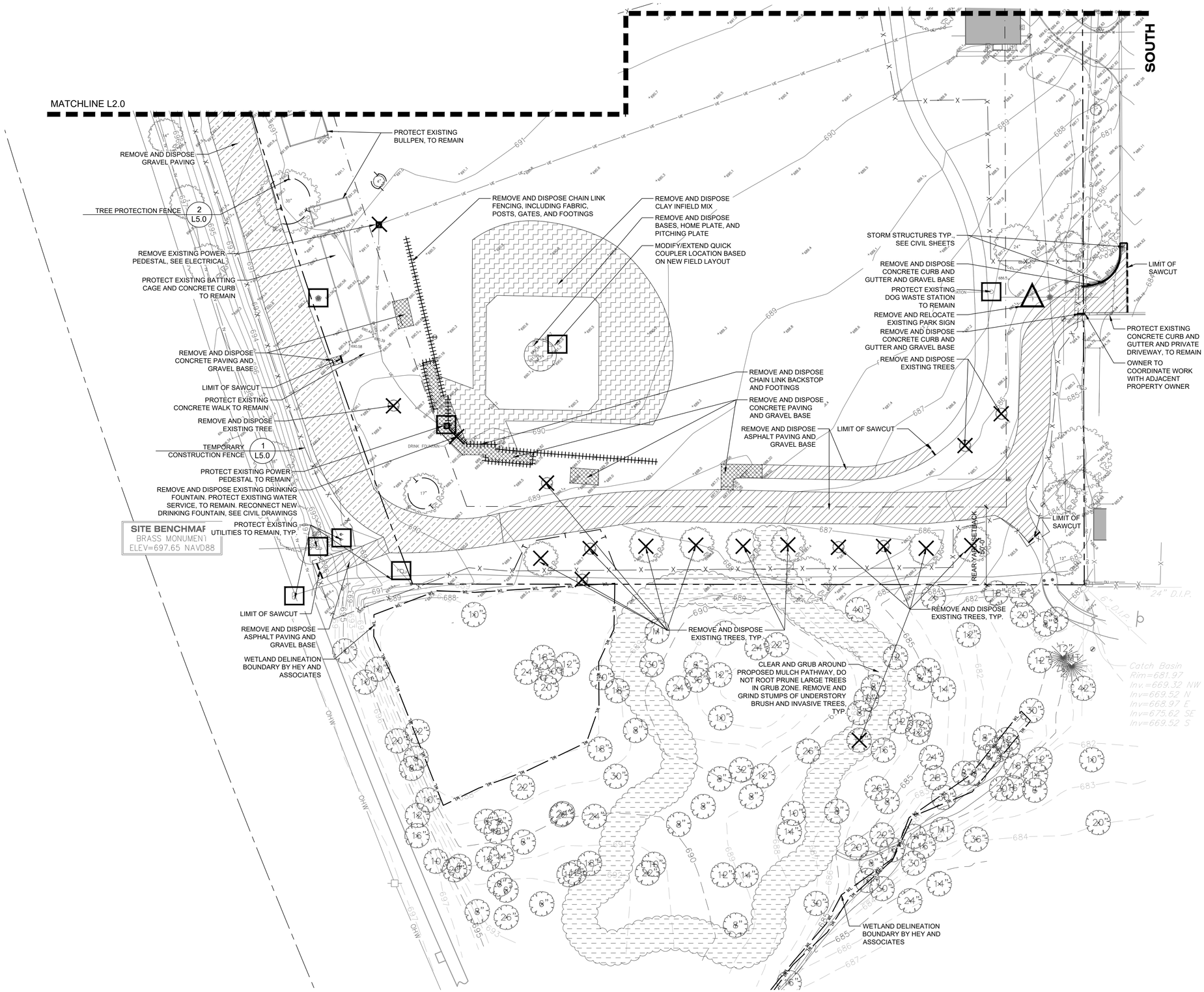

SITE PREPARATION AND REMOVALS NOTES

1. Contractor shall install construction fence at the limits of construction prior to beginning work. Maintain and adjust construction fencing as needed during progress of construction. Staging and construction access shall be approved by Owner.
2. Contractor shall install tree protection fencing as shown on the plans prior to beginning work. Maintain and adjust tree protection fencing as needed during progress of construction. Storage of materials, vehicular access, and all other construction activities are strictly prohibited within the limits of the tree protection fencing.
3. Plans indicate general location and limits of removals. Contractor shall perform removals only as necessary for construction of proposed improvements. No additional payments will be made for removals or restoration not required to construct the improvements as drawn and specified. Refer to Layout Plan for more specific information regarding proposed improvements and verify conditions in the field prior to performing removals.
4. Sawcut and remove concrete paving to nearest joint where indicated. All saw cuts required for removal items to be included in the unit cost of that particular pay item.
5. Tree stumps shall be ground to a minimum depth of 18" below existing grade or as required to properly perform the work.
6. Remove and dispose of turf where planting beds are designated. Refer to Planting Plan for limits of proposed landscape improvements.
7. Where turf or plantings are proposed in existing paved areas, remove all base material.
8. Remove all utilities designated for removal to extent required for improvements, unless otherwise noted. Cap ends of any remaining underground conduit and piping, and pull all electrical wire out at source.
9. Items indicated for Removal shall include complete removal of above grade item and below grade appurtances (foundations, urban fill, wiring, piping, etc.) including disposal off-site following applicable codes and ordinances, unless otherwise shown on the plans.
10. Items indicated as Remove and Salvage shall include careful protection, removal, and storage of items. For reinstall items, Contractor shall store during construction. All other Salvage items shall be delivered to location as indicated by owner unless otherwise shown on the plans.
11. Contractor to protect all existing utilities and all other site features not designated for removal. Contractor is responsible for replacing/repairing any existing utilities or other site features damaged during construction to the original condition at no cost to the Owner.
12. Contractor responsible for maintaining existing utility services (electrical, sanitary, storm) during construction unless otherwise indicated in the Contract Documents.
13. Contractor shall coordinate all work so public sidewalk remains open throughout construction.
14. Refer to civil and electrical plans for additional utility adjustments and removals.
15. Refer to specifications for additional conditions, standards and notes.

SITE PREPARATION AND REMOVALS LEGEND

- Remove and dispose concrete paving and gravel base. Remove subgrade material as needed.
- Remove and dispose asphalt paving and gravel base. Remove subgrade material as needed.
- Remove and dispose gravel paving. Remove subgrade material as needed.
- Clear and grub
- Tree Protection Fence
- Item to be removed
- Item to be protected
- Curb to be removed
- Limit of sawcut
- Silt Fence
- Construction Fence
- Fence to be removed
- Item to be relocated

0 15' 30' 60'
SCALE: 1" = 30'-0"

RVi
22 East Chicago Avenue
Suite 200a
Naperville, IL 60540
Tel: 312.634.2100
www.rvilanning.com

PREPARED FOR
CITY OF LAKE FOREST

800 N. FIELD DRIVE
LAKE FOREST, ILLINOIS 60045

CONSULTANTS

CIVIL ENGINEER
HEY AND ASSOCIATES, INC.
26575 W. COMMERCE DRIVE
SUITE 601
VOLO, ILLINOIS 60073
T 847.740.0888

ELECTRICAL ENGINEER
NOVA ENGINEERING, PC
2338 S. CLINE AVENUE
SCHERERVILLE, INDIANA 46375
T 219.865.3352

SOUTH PARK PHASE TWO

ISSUE FOR BID
150 S. MAYWOOD RD.
LAKE FOREST, ILLINOIS 60045

PROJECT NO:	26000793
DATE:	10/28/2026
DRAWN:	MDB/AMM
REVIEWED:	LJL

OCTOBER 28, 2026
REVISIONS:

NO.	DATE	ISSUE

SITE PREPARATION AND REMOVALS PLAN - SOUTH

L2.1

01_ORIGINAL ISSUE

L:\2026\26000793 south park ph2\05 production\03 CD\01 current plans\L2.0 Site Preparation and Removals Plan.dwg 10/28/2026 mirandi berger

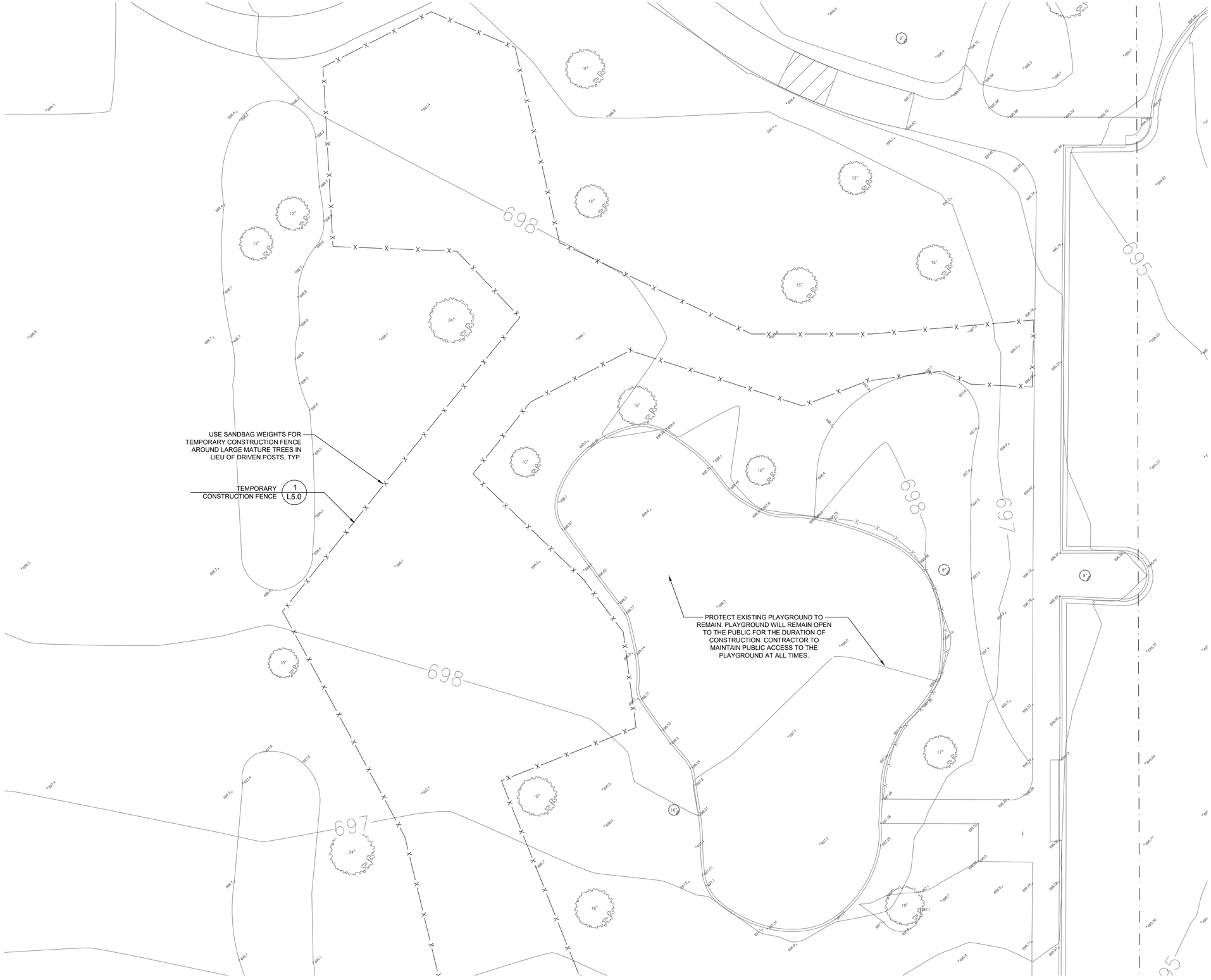

SITE PREPARATION AND REMOVALS NOTES

1. Contractor shall install construction fence at the limits of construction prior to beginning work. Maintain and adjust construction fencing as needed during progress of construction. Staging and construction access shall be approved by Owner.
2. Contractor shall install tree protection fencing as shown on the plans prior to beginning work. Maintain and adjust tree protection fencing as needed during progress of construction. Storage of materials, vehicular access, and all other construction activities are strictly prohibited within the limits of the tree protection fencing.
3. Plans indicate general location and limits of removals. Contractor shall perform removals only as necessary for construction of proposed improvements. No additional payments will be made for removals or restoration not required to construct the improvements as drawn and specified. Refer to Layout Plan for more specific information regarding proposed improvements and verify conditions in the field prior to performing removals.
4. Sawcut and remove concrete paving to nearest joint where indicated. All saw cuts required for removal items to be included in the unit cost of that particular pay item.
5. Tree stumps shall be ground to a minimum depth of 18" below existing grade or as required to properly perform the work.
6. Remove and dispose of turf where planting beds are designated. Refer to Planting Plan for limits of proposed landscape improvements.
7. Where turf or plantings are proposed in existing paved areas, remove all base material.
8. Remove all utilities designated for removal to extent required for improvements, unless otherwise noted. Cap ends of any remaining underground conduit and piping, and pull all electrical wire out at source.
9. Items indicated for Removal shall include complete removal of above grade item and below grade appurtances (foundations, urban fill, wiring, piping, etc.) including disposal off-site following applicable codes and ordinances, unless otherwise shown on the plans.
10. Items indicated as Remove and Salvage shall include careful protection, removal, and storage of items. For reinstall items, Contractor shall store during construction. All other Salvage items shall be delivered to location as indicated by owner unless otherwise shown on the plans.
11. Contractor to protect all existing utilities and all other site features not designated for removal. Contractor is responsible for replacing/repairing any existing utilities or other site features damaged during construction to the original condition at no cost to the Owner.
12. Contractor responsible for maintaining existing utility services (electrical, sanitary, storm) during construction unless otherwise indicated in the Contract Documents.
13. Contractor shall coordinate all work so public sidewalk remains open throughout construction.
14. Refer to civil and electrical plans for additional utility adjustments and removals.
15. Refer to specifications for additional conditions, standards and notes.

SITE PREPARATION AND REMOVALS LEGEND

- Remove and dispose concrete paving and gravel base. Remove subgrade material as needed.
- Remove and dispose asphalt paving and gravel base. Remove subgrade material as needed.
- Remove and dispose gravel paving. Remove subgrade material as needed.
- Clear and grub
- Tree Protection Fence
- Item to be removed
- Item to be protected
- Curb to be removed
- Limit of sawcut
- Silt Fence
- Construction Fence
- Fence to be removed
- Item to be relocated

0 5' 10' 20'
SCALE: 1" = 10'-0"

RVi
22 East Chicago Avenue
Suite 200a
Naperville, IL 60540
Tel: 312.634.2100
www.rviplanning.com

PREPARED FOR
CITY OF LAKE FOREST

800 N. FIELD DRIVE
LAKE FOREST, ILLINOIS 60045

CONSULTANTS

CIVIL ENGINEER
HEY AND ASSOCIATES, INC.
26575 W. COMMERCE DRIVE
SUITE 601
VOLO, ILLINOIS 60073
T 847.740.0888

ELECTRICAL ENGINEER
NOVA ENGINEERING, PC
2338 S. CLINE AVENUE
SCHERERVILLE, INDIANA 46375
T 219.865.3352

SOUTH PARK PHASE TWO

ISSUE FOR BID
150 S. MAYWOOD RD.
LAKE FOREST, ILLINOIS 60045

PROJECT NO:	26000793
DATE:	10/28/2026
DRAWN:	MDB/AMM
REVIEWED:	LJL

OCTOBER 28, 2026
REVISIONS:

NO.	DATE	ISSUE

SITE PREPARATION AND REMOVALS PLAN - ENLARGEMENT

L2.2

01_ORIGINAL ISSUE

L:\2026\26000793 south park ph2\05 production\03 CD\01 current plans\L2.0 Site Preparation and Removals Plan.dwg 10/28/2026 mirandi berger

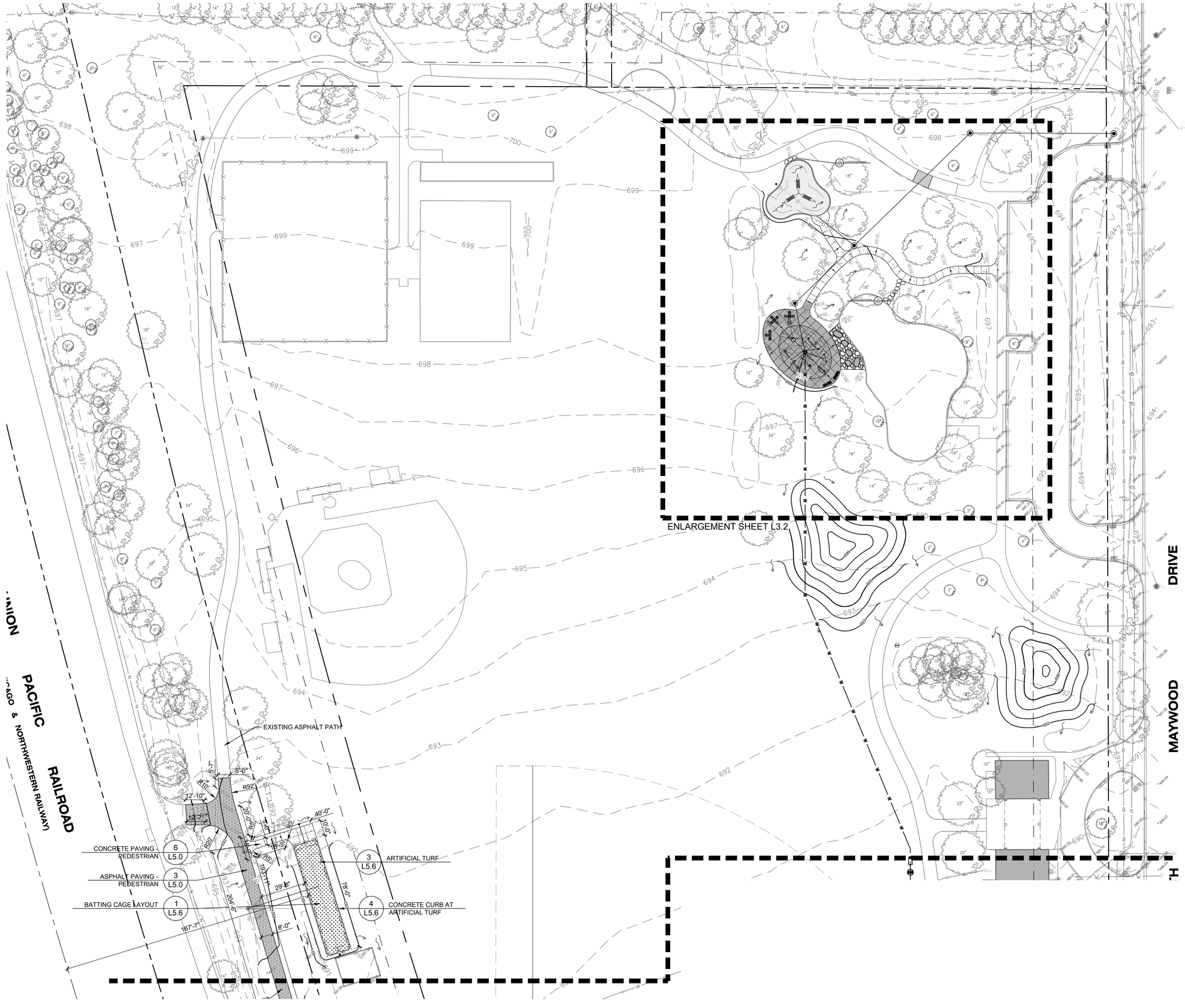

LAYOUT NOTES

1. Contractor responsible for field layout of all new improvements. Digital files of geometric information will be provided upon request in AutoCAD format. No additional payment will be made for adjustments necessary to construct the work as drawn.
2. Contractor responsible to coordinate work in order to obtain approval of all layout by Owners Representative prior to construction. No additional payment will be made to correct work if constructed incorrectly without pre-approval by Owners Representative.
3. Contractor responsible to maintain all layout stakes during construction. No additional payment will be made to replace layout stakes.
4. Place stakes at edges of fields, limits of splashpad, shelter, parking lot and every 25 feet on center along centerline of all pathways for review by the Owner's Representative prior to earthwork operations.
5. All dimensions from roadway are from Back of Curb unless otherwise noted.
6. All curves and radii to be smooth and not segmented.
7. Contractor to provide layout stakes every 10 feet minimum for large arcs where radius points are not accessible.
8. Adjustment to stake locations due to discrepancies between coordinates and dimensions is incidental to the contract. No additional payments will be made for this work.
9. All roadway widths are measured from edge of pavement to edge of pavement unless otherwise shown on the plans.
10. Contractor responsible to take delivery, assemble and install all materials and furnishings per manufacturer's instructions.
11. Place control and expansion joints as shown on plans and details for all curbs, walks, walls, steps, and concrete paving. Where joints are not shown, place control joints a maximum of 10 feet on center, expansion joints a maximum of 30 feet on center, and between all separate pours.
12. Contractor will maintain use zone requirements within soft surfacing; no use zone will overlap or be tangent unless noted. Adjust barrier curb and/or adjacent paving as needed to accommodate equipment fall zones.
13. Coordinate location of storm line with hammock and fitness equipment footings and obtain Owner's approval prior to installation.
14. Layout of soft surface shall be verified in field by landscape architect.
15. Refer to specifications for additional conditions, standards and notes.

LAYOUT LEGEND

- Asphalt Paving - Vehicular
- Asphalt Paving - Pedestrian
- Concrete Paving - Pedestrian
- Concrete Paving - Splash Pad
- Poured in Place Rubber Surfacing
- Artificial Turf Surfacing
- AquaFlex Surfacing

RVi
22 East Chicago Avenue
Suite 200a
Naperville, IL 60540
Tel: 312.634.2100
www.rvilanning.com

PREPARED FOR
CITY OF LAKE FOREST

800 N. FIELD DRIVE
LAKE FOREST, ILLINOIS 60045

CONSULTANTS

CIVIL ENGINEER
HEY AND ASSOCIATES, INC.
26575 W. COMMERCE DRIVE
SUITE 601
VOLO, ILLINOIS 60073
T 847.740.0888

ELECTRICAL ENGINEER
NOVA ENGINEERING, PC
2338 S. CLINE AVENUE
SCHERERVILLE, INDIANA 46375
T 219.865.3352

SOUTH PARK PHASE TWO

ISSUE FOR BID
150 S. MAYWOOD RD.
LAKE FOREST, ILLINOIS 60045

PROJECT NO:	26000793
DATE:	10/28/2026
DRAWN:	MDB/AMM
REVIEWED:	LJL

OCTOBER 28, 2026
REVISIONS:

NO.	DATE	ISSUE

LAYOUT AND MATERIALS PLAN - NORTH

L3.0

01_ORIGINAL ISSUE

L:\2026\26000793 south park ph2\05 production\03 CD\01 current plans\L3.0 Layout and Materials Plan.dwg 10/28/2026 miranti berger

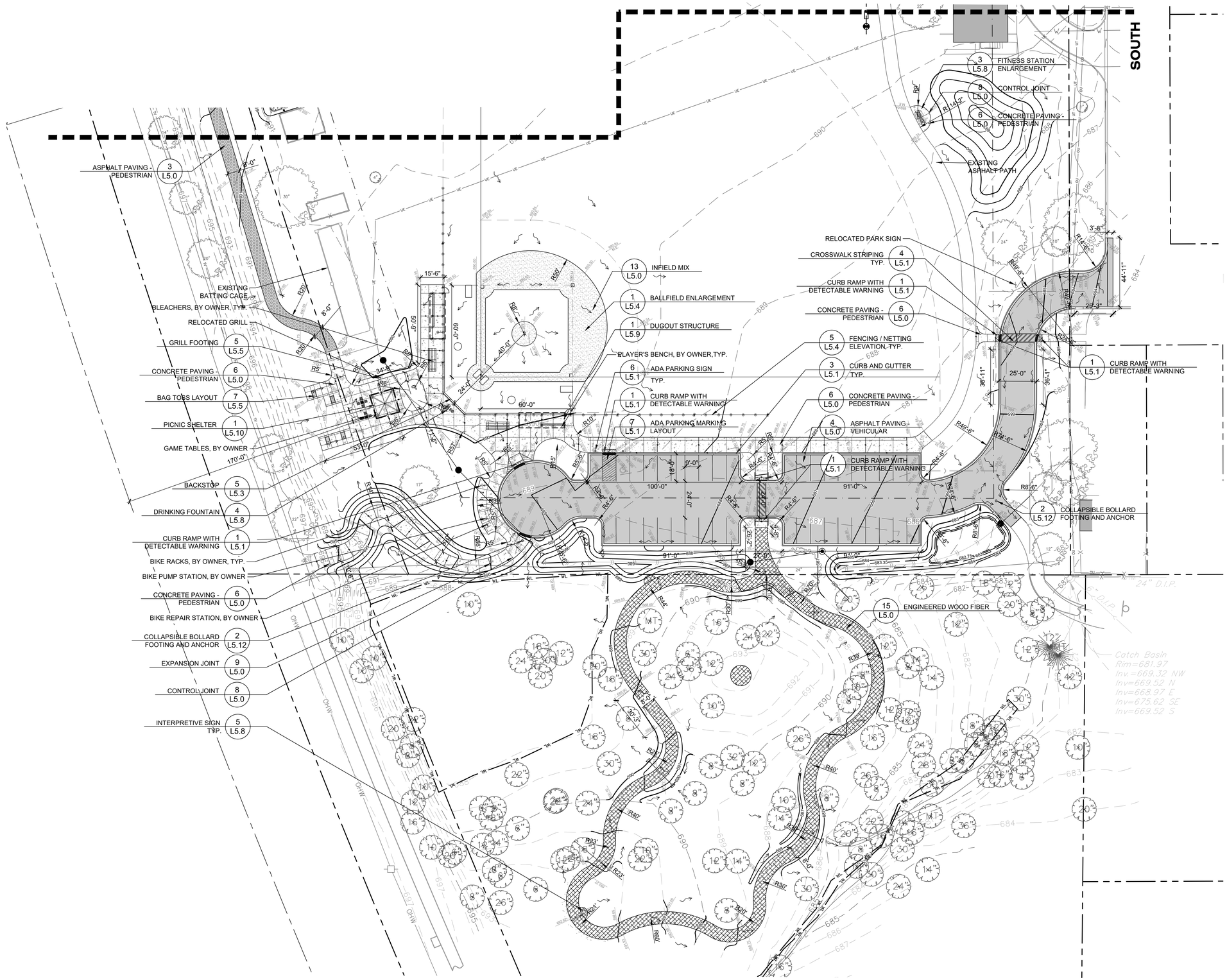

LAYOUT NOTES

1. Contractor responsible for field layout of all new improvements. Digital files of geometric information will be provided upon request in AutoCAD format. No additional payment will be made for adjustments necessary to construct the work as drawn.
2. Contractor responsible to coordinate work in order to obtain approval of all layout by Owners Representative prior to construction. No additional payment will be made to correct work if constructed incorrectly without pre-approval by Owners Representative.
3. Contractor responsible to maintain all layout stakes during construction. No additional payment will be made to replace layout stakes.
4. Place stakes at edges of fields, limits of splashpad, shelter, parking lot and every 25 feet on center along centerline of all pathways for review by the Owner's Representative prior to earthwork operations.
5. All dimensions from roadway are from Back of Curb unless otherwise noted.
6. All curves and radii to be smooth and not segmented.
7. Contractor to provide layout stakes every 10 feet minimum for large arcs where radius points are not accessible.
8. Adjustment to stake locations due to discrepancies between coordinates and dimensions is incidental to the contract. No additional payments will be made for this work.
9. All roadway widths are measured from edge of pavement to edge of pavement unless otherwise shown on the plans.
10. Contractor responsible to take delivery, assemble and install all materials and furnishings per manufacturer's instructions.
11. Place control and expansion joints as shown on plans and details for all curbs, walks, walls, steps, and concrete paving. Where joints are not shown, place control joints a maximum of 10 feet on center, expansion joints a maximum of 30 feet on center, and between all separate pours.
12. Contractor will maintain use zone requirements within soft surfacing; no use zone will overlap or be tangent unless noted. Adjust barrier curb and/or adjacent paving as needed to accommodate equipment fall zones.
13. Coordinate location of storm line with hammock and fitness equipment footings and obtain Owner's approval prior to installation.
14. Layout of soft surface shall be verified in field by landscape architect.
15. Refer to specifications for additional conditions, standards and notes.

LAYOUT LEGEND

- Asphalt Paving - Vehicular
- Asphalt Paving - Pedestrian
- Concrete Paving - Pedestrian
- Concrete Paving - Splash Pad
- Poured in Place Rubber Surfacing
- Artificial Turf Surfacing
- AquaFlex Surfacing

RVi
22 East Chicago Avenue
Suite 200a
Naperville, IL 60540
Tel: 312.634.2100
www.rvilanning.com

PREPARED FOR
CITY OF LAKE FOREST

800 N. FIELD DRIVE
LAKE FOREST, ILLINOIS 60045

CONSULTANTS

CIVIL ENGINEER
HEY AND ASSOCIATES, INC.
26575 W. COMMERCE DRIVE
SUITE 601
VOLO, ILLINOIS 60073
T 847.740.0888

ELECTRICAL ENGINEER
NOVA ENGINEERING, PC
2338 S. CLINE AVENUE
SCHERERVILLE, INDIANA 46375
T 219.865.3352

SOUTH PARK PHASE TWO

ISSUE FOR BID
150 S. MAYWOOD RD.
LAKE FOREST, ILLINOIS 60045

PROJECT NO:	26000793
DATE:	10/28/2026
DRAWN:	MDB/AMM
REVIEWED:	LJL

OCTOBER 28, 2026
REVISIONS:

NO.	DATE	ISSUE

LAYOUT AND MATERIALS PLAN - SOUTH

L3.1

01_ORIGINAL ISSUE

L:\2026\26000793 south park ph2\05 production\03 CD\01 current plans\L3.0 Layout and Materials Plan.dwg 10/28/2026 mirandi berger

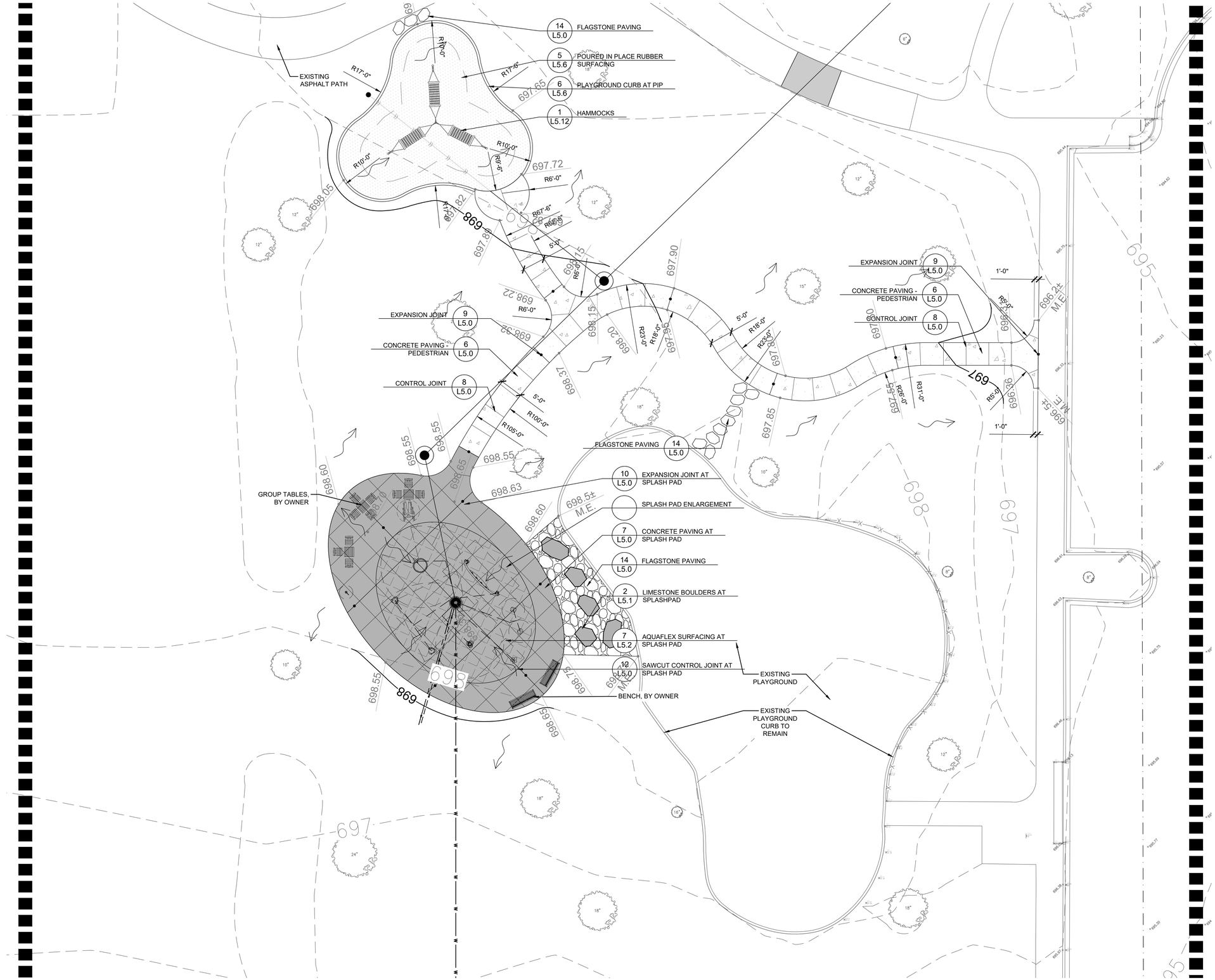

LAYOUT NOTES

1. Contractor responsible for field layout of all new improvements. Digital files of geometric information will be provided upon request in AutoCAD format. No additional payment will be made for adjustments necessary to construct the work as drawn.
2. Contractor responsible to coordinate work in order to obtain approval of all layout by Owners Representative prior to construction. No additional payment will be made to correct work if constructed incorrectly without pre-approval by Owners Representative.
3. Contractor responsible to maintain all layout stakes during construction. No additional payment will be made to replace layout stakes.
4. Place stakes at edges of fields, limits of splashpad, shelter, parking lot and every 25 feet on center along centerline of all pathways for review by the Owner's Representative prior to earthwork operations.
5. All dimensions from roadway are from Back of Curb unless otherwise noted.
6. All curves and radii to be smooth and not segmented.
7. Contractor to provide layout stakes every 10 feet minimum for large arcs where radius points are not accessible.
8. Adjustment to stake locations due to discrepancies between coordinates and dimensions is incidental to the contract. No additional payments will be made for this work.
9. All roadway widths are measured from edge of pavement to edge of pavement unless otherwise shown on the plans.
10. Contractor responsible to take delivery, assemble and install all materials and furnishings per manufacturer's instructions.
11. Place control and expansion joints as shown on plans and details for all curbs, walks, walls, steps, and concrete paving. Where joints are not shown, place control joints a maximum of 10 feet on center, expansion joints a maximum of 30 feet on center, and between all separate pours.
12. Contractor will maintain use zone requirements within soft surfacing; no use zone will overlap or be tangent unless noted. Adjust barrier curb and/or adjacent paving as needed to accommodate equipment fall zones.
13. Coordinate location of storm line with hammock and fitness equipment footings and obtain Owner's approval prior to installation.
14. Layout of soft surface shall be verified in field by landscape architect.
15. Refer to specifications for additional conditions, standards and notes.

LAYOUT LEGEND

- Asphalt Paving - Vehicular
- Asphalt Paving - Pedestrian
- Concrete Paving - Pedestrian
- Concrete Paving - Splash Pad
- Poured in Place Rubber Surfacing
- Artificial Turf Surfacing
- AquaFlex Surfacing

0 5' 10' 20'
SCALE: 1" = 10'-0"

RVi
22 East Chicago Avenue
Suite 200a
Naperville, IL 60540
Tel: 312.634.2100
www.rvilanning.com

PREPARED FOR
CITY OF LAKE FOREST

800 N. FIELD DRIVE
LAKE FOREST, ILLINOIS 60045

CONSULTANTS

CIVIL ENGINEER
HEY AND ASSOCIATES, INC.
26575 W. COMMERCE DRIVE
SUITE 601
VOLO, ILLINOIS 60073
T 847.740.0888

ELECTRICAL ENGINEER
NOVA ENGINEERING, PC
2338 S. CLINE AVENUE
SCHERERVILLE, INDIANA 46375
T 219.865.3352

SOUTH PARK PHASE TWO

ISSUE FOR BID
150 S. MAYWOOD RD.
LAKE FOREST, ILLINOIS 60045

PROJECT NO:	26000793
DATE:	10/28/2026
DRAWN:	MDB/AMM
REVIEWED:	LJL

OCTOBER 28, 2026
REVISIONS:

NO.	DATE	ISSUE

LAYOUT AND MATERIALS PLAN - ENLARGEMENT

L3.2

01_ORIGINAL ISSUE

L:\2026\26000793 south park ph2\05 production\03 CD\01 current plans\L3.0 Layout and Materials Plan.dwg 10/28/2026 mirandi berger

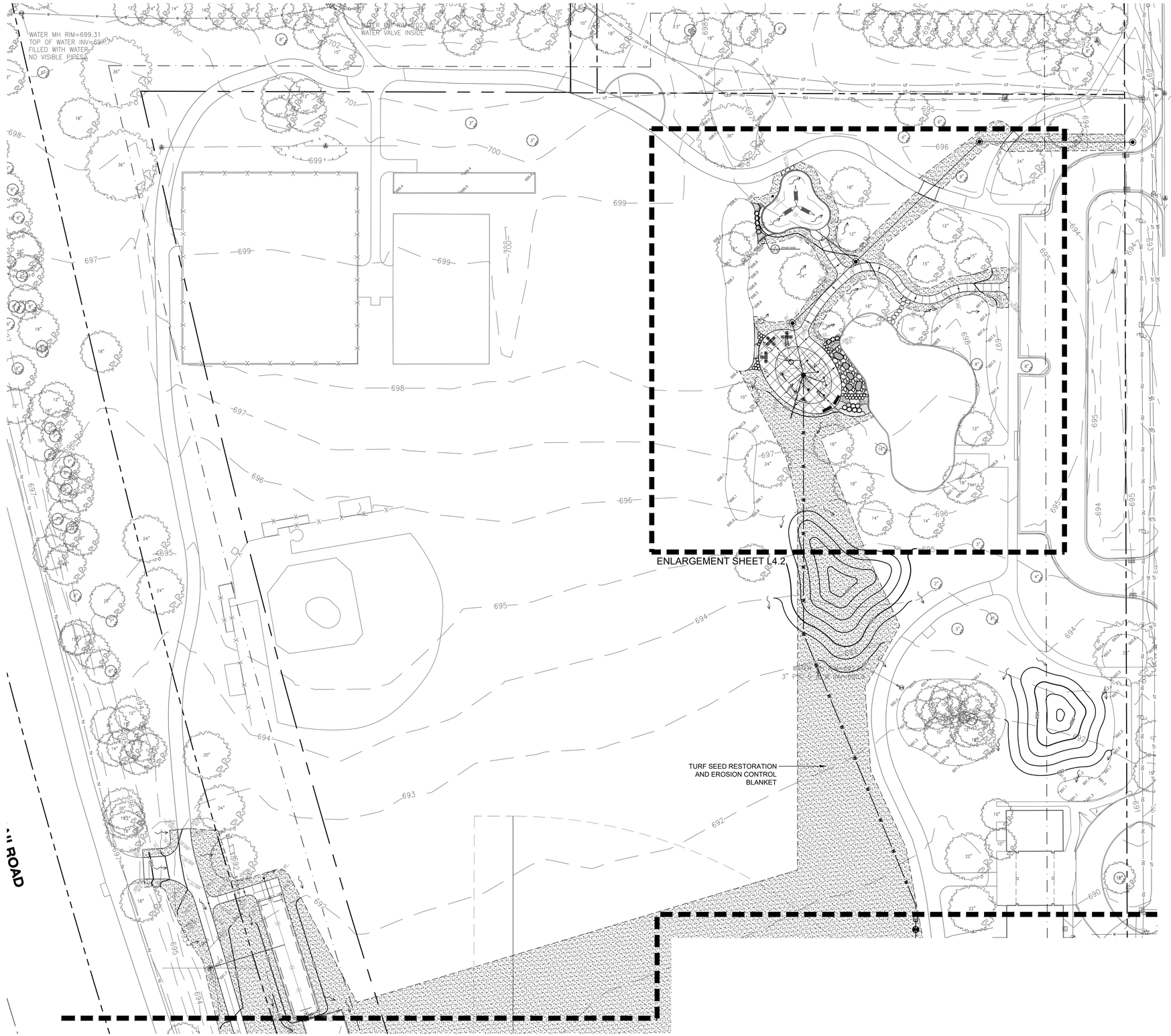

PLANTING NOTES

1. Seed limit line is approximate. Seed to limits of grading and disturbance. Contractor responsible for restoration of any unauthorized disruption outside of designated construction area.
2. Contractor responsible for erosion control in all seeded areas.
3. Tree mulch rings in turf areas are 5 foot diameter, typical. Contractor shall provide a mulch ring around all existing trees within the limit of work. Remove all existing grass from area to be mulched and provide a typical v-trench edge.
4. Bedlines are to be spade cut to a minimum depth of 3 inches unless otherwise shown on the plans. Curved bedlines are to be smooth and not segmented.
5. Do not locate plants within 10' of utility structures, or within 5' horizontally of underground utility lines unless otherwise shown on the plans. Consult with Landscape Architect if these conditions exist.
6. Plants and other materials are quantified and summarized for the convenience of the Owner and jurisdictional agencies only. Confirm and install sufficient quantities to complete the work as drawn and specified. No additional payments will be made for materials required to complete the work as drawn and specified.
7. Refer to specifications for additional conditions, standards and notes.

PLANTING LEGEND

Turf Seeding and Erosion Control Blanket

0 15' 30' 60'

SCALE: 1" = 30'-0"

RVi
22 East Chicago Avenue
Suite 200a
Naperville, IL 60540
Tel: 312.634.2100
www.rvilanning.com

PREPARED FOR

CITY OF LAKE FOREST

800 N. FIELD DRIVE
LAKE FOREST, ILLINOIS 60045

CONSULTANTS

CIVIL ENGINEER
HEY AND ASSOCIATES, INC.
26575 W. COMMERCE DRIVE
SUITE 601
VOLO, ILLINOIS 60073
T 847.740.0888

ELECTRICAL ENGINEER
NOVA ENGINEERING, PC
2338 S. CLINE AVENUE
SCHERERVILLE, INDIANA 46375
T 219.865.3352

SOUTH PARK PHASE TWO

ISSUE FOR BID

150 S. MAYWOOD RD.
LAKE FOREST, ILLINOIS 60045

PROJECT NO:	26000793
DATE:	10/28/2026
DRAWN:	MDB/AMM
REVIEWED:	LJL

OCTOBER 28, 2026

REVISIONS:

NO.	DATE	ISSUE

PLANTING PLAN - NORTH

L4.0

01_ORIGINAL ISSUE

L:\2026\26000793 south park ph2\05 production\03 CD\01 current plans\L4.0 Planting Plan.dwg 10/28/2026 miranda berger

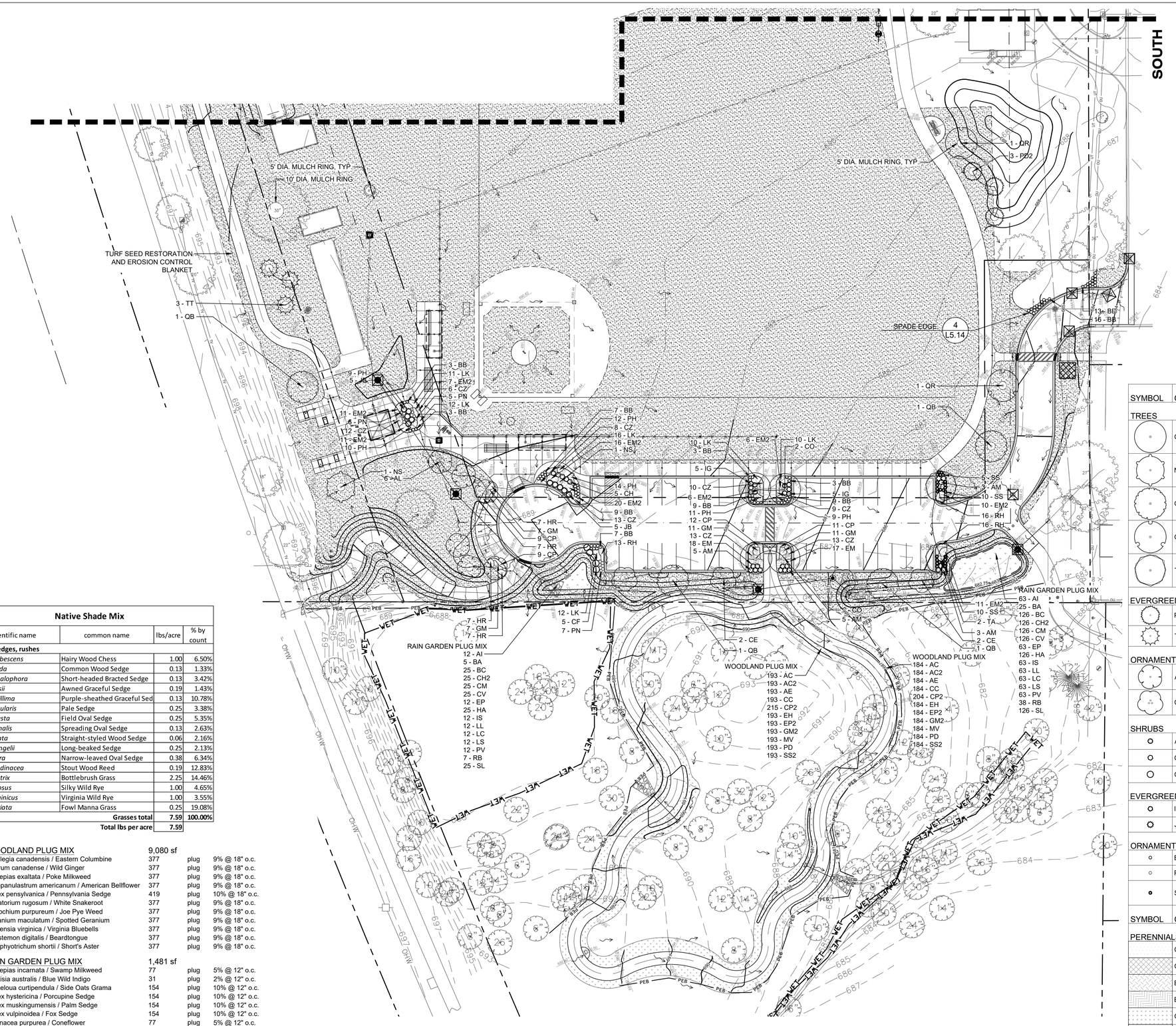

PLANTING NOTES

1. Seed limit line is approximate. Seed to limits of grading and disturbance. Contractor responsible for restoration of any unauthorized disruption outside of designated construction area.
2. Contractor responsible for erosion control in all seeded areas.
3. Tree mulch rings in turf areas are 5 foot diameter, typical. Contractor shall provide a mulch ring around all existing trees within the limit of work. Remove all existing grass from area to be mulched and provide a typical v-trench edge.
4. Bedlines are to be spade cut to a minimum depth of 3 inches unless otherwise shown on the plans. Curved bedlines are to be smooth and not segmented.
5. Do not locate plants within 10' of utility structures, or within 5' horizontally of underground utility lines unless otherwise shown on the plans. Consult with Landscape Architect if these conditions exist.
6. Plants and other materials are quantified and summarized for the convenience of the Owner and jurisdictional agencies only. Confirm and install sufficient quantities to complete the work as drawn and specified. No additional payments will be made for materials required to complete the work as drawn and specified.
7. Refer to specifications for additional conditions, standards and notes.

PLANTING LEGEND

- Turf Seeding and Erosion Control Blanket
- Woodland Plug Mix
- Rain Garden Plug Mix

SYMBOL	CODE	BOTANICAL / COMMON NAME	SIZE		QTY
TREES					
	CO	Celtis occidentalis Common Hackberry	3" Cal		4
	NS	Nyssa sylvatica Tupelo	3" Cal		2
	QB	Quercus bicolor Swamp White Oak	3" Cal		4
	QR	Quercus rubra Northern Red Oak	3" Cal		2
	TA	Tilia americana American Linden	3" Cal		2
EVERGREEN TREES					
	PD2	Picea glauca 'Densata' Black Hills White Spruce	8' Ht.		3
	TT	Thuja occidentalis 'Techny' Techny Arborvitae	8' Ht.		3
ORNAMENTAL TREE					
	AL	Amelanchier laevis Allegheny Serviceberry Multi-trunk	8' Ht.		6
	CE	Cercis canadensis Eastern Redbud Multi-trunk	8' Ht.		4
SHRUBS					
	AM	Aronia melanocarpa 'Morton' Iroquois Beauty™ Black Chokeberry	3 Gal.		16
	CH	Clethra alnifolia 'Hummingbird' Hummingbird Summersweet	3 Gal.		5
	CF	Cornus sericea 'Farrow' Arctic Fire® Red Twig Dogwood	3 Gal.		5
EVERGREEN SHRUBS					
	IG	Ilex glabra Inkberry Holly	3 Gal.		10
	JB	Juniperus virginiana 'Blue Mountain' Nordic® Blue Eastern Redcedar	3 Gal.		10
ORNAMENTAL GRASSES					
	BB	Bouteloua gracilis 'Blonde Ambition' Blonde Ambition Blue Grama	2 Gal.		82
	PN	Panicum virgatum 'Northwind' Northwind Switch Grass	2 Gal.		18
	SS	Schizachyrium scoparium 'Standing Ovation' Standing Ovation Little Bluestem	2 Gal.		25
SYMBOL	CODE	BOTANICAL / COMMON NAME	SIZE	SPACING	QTY
PERENNIALS					
	CP	Carex pensylvanica Pennsylvania Sedge	1 Gal.	18" o.c.	41
	CZ	Coreopsis verticillata 'Zagreb' Zagreb Tickseed	1 Gal.	18" o.c.	84
	EM2	Echinacea purpurea 'Magnus' Magnus Purple Coneflower	1 Gal.	18" o.c.	98
	EM	Eurybia macrophylla Bigleaf Aster	1 Gal.	18" o.c.	35
	GM	Geranium maculatum Spotted Geranium	1 Gal.	18" o.c.	36
	HR	Heuchera richardsonii Prairie Alumroot	1 Gal.	18" o.c.	28
	LK	Liatris spicata 'Kobold' Kobold Blazing Star	1 Gal.	18" o.c.	71
	PH	Penstemon digitalis 'Husker Red' Husker Red Beardtongue	1 Gal.	18" o.c.	65
	RH	Rudbeckia hirta Black-eyed Susan	1 Gal.	15" o.c.	45

Native Shade Mix			
scientific name	common name	lbs/acre	% by count
Grasses, sedges, rushes			
Bromus pubescens	Hairy Wood Chess	1.00	6.50%
Carex blanda	Common Wood Sedge	0.13	1.33%
Carex cephalophora	Short-headed Bracted Sedge	0.13	3.42%
Carex davisii	Awned Graceful Sedge	0.19	1.43%
Carex gracillima	Purple-sheathed Graceful Sed	0.13	10.78%
Carex granularis	Pale Sedge	0.25	3.38%
Carex molesta	Field Oval Sedge	0.25	5.35%
Carex normalis	Spreading Oval Sedge	0.13	2.63%
Carex radiata	Straight-styled Wood Sedge	0.06	2.16%
Carex sprengelii	Long-beaked Sedge	0.25	2.13%
Carex tenera	Narrow-leaved Oval Sedge	0.38	6.34%
Cinna arundinacea	Stout Wood Reed	0.19	12.83%
Elymus hystrix	Bottlebrush Grass	2.25	14.46%
Elymus villosus	Silky Wild Rye	1.00	4.65%
Elymus virginicus	Virginia Wild Rye	1.00	3.55%
Glyceria striata	Fowl Manna Grass	0.25	19.08%
	Grasses total	**7.59**	**100.00%**
	Total lbs per acre	**7.59**	

WOODLAND PLUG MIX	9,080 sf		
Aquilegia canadensis / Eastern Columbine	377	plug	9% @ 18" o.c.
Asarum canadense / Wild Ginger	377	plug	9% @ 18" o.c.
Asclepias exaltata / Poke Milkweed	377	plug	9% @ 18" o.c.
Campanulastrum americanum / American Bellflower	377	plug	9% @ 18" o.c.
Carex pensylvanica / Pennsylvania Sedge	419	plug	10% @ 18" o.c.
Eupatorium rugosum / White Snakeroot	377	plug	9% @ 18" o.c.
Eutrochium purpureum / Joe Pye Weed	377	plug	9% @ 18" o.c.
Geranium maculatum / Spotted Geranium	377	plug	9% @ 18" o.c.
Mertensia virginica / Virginia Bluebells	377	plug	9% @ 18" o.c.
Penstemon digitalis / Beardtongue	377	plug	9% @ 18" o.c.
Symphyotrichum shortii / Short's Aster	377	plug	9% @ 18" o.c.

RAIN GARDEN PLUG MIX	1,481 sf		
Asclepias incarnata / Swamp Milkweed	77	plug	5% @ 12" o.c.
Baptisia australis / Blue Wild Indigo	31	plug	2% @ 12" o.c.
Bouteloua curtipendula / Side Oats Grama	154	plug	10% @ 12" o.c.
Carex hystericina / Porcupine Sedge	154	plug	10% @ 12" o.c.
Carex muskingumensis / Palm Sedge	154	plug	10% @ 12" o.c.
Carex vulpinoidea / Fox Sedge	154	plug	10% @ 12" o.c.
Echinacea purpurea / Coneflower	77	plug	5% @ 12" o.c.
Helenium autumnale / Sneezeweed	154	plug	10% @ 12" o.c.
Iris virginica shrevei / Shreve's Iris	77	plug	5% @ 12" o.c.
Liatris ligulistylis / Meadow Blazing-star	77	plug	5% @ 12" o.c.
Lobelia cardinalis / Cardinal Flower	77	plug	5% @ 12" o.c.
Lobelia siphilitica / Great Lobelia	77	plug	5% @ 12" o.c.
Physostegia virginiana / Obedient Plant	77	plug	5% @ 12" o.c.
Rudbeckia fulgida / Coneflower	46	plug	3% @ 12" o.c.
Schizachyrium scoparium / Little Bluestem	154	plug	10% @ 12" o.c.

RVi
22 East Chicago Avenue
Suite 200a
Naperville, IL 60540
Tel: 312.634.2100
www.rvilanning.com

PREPARED FOR
CITY OF LAKE FOREST

800 N. FIELD DRIVE
LAKE FOREST, ILLINOIS 60045

CONSULTANTS

CIVIL ENGINEER
HEY AND ASSOCIATES, INC.
26575 W. COMMERCE DRIVE
SUITE 601
VOLO, ILLINOIS 60073
T 847.740.0888

ELECTRICAL ENGINEER
NOVA ENGINEERING, PC
2338 S. CLINE AVENUE
SCHERERVILLE, INDIANA 46375
T 219.865.3352

SOUTH PARK PHASE TWO

ISSUE FOR BID
150 S. MAYWOOD RD.
LAKE FOREST, ILLINOIS 60045

PROJECT NO:	26000793
DATE:	10/28/2026
DRAWN:	MDB/AMM
REVIEWED:	LJL

OCTOBER 28, 2026
REVISIONS:

NO.	DATE	ISSUE

PLANTING PLAN - SOUTH

L4.1

01_ORIGINAL ISSUE

L:\2026\26000793 south park ph2\05 production\03 CD\01 current plans\L4.0 Planting Plan.dwg 10/28/2026 mbrandt.berger



PLANTING NOTES

1. Seed limit line is approximate. Seed to limits of grading and disturbance. Contractor responsible for restoration of any unauthorized disruption outside of designated construction area.
2. Contractor responsible for erosion control in all seeded areas.
3. Tree mulch rings in turf areas are 5 foot diameter, typical. Contractor shall provide a mulch ring around all existing trees within the limit of work. Remove all existing grass from area to be mulched and provide a typical v-trench edge.
4. Bedlines are to be spade cut to a minimum depth of 3 inches unless otherwise shown on the plans. Curved bedlines are to be smooth and not segmented.
5. Do not locate plants within 10' of utility structures, or within 5' horizontally of underground utility lines unless otherwise shown on the plans. Consult with Landscape Architect if these conditions exist.
6. Plants and other materials are quantified and summarized for the convenience of the Owner and jurisdictional agencies only. Confirm and install sufficient quantities to complete the work as drawn and specified. No additional payments will be made for materials required to complete the work as drawn and specified.
7. Refer to specifications for additional conditions, standards and notes.

PLANTING LEGEND

Turf Seeding and Erosion Control Blanket

PLANT SCHEDULE SPLASH PAD ENLARGEMENT

SYMBOL	CODE	BOTANICAL NAME	COMMON NAME	SIZE		QTY
SHRUBS						
	AM	Aronia melanocarpa 'Morton'	Iroquois Beauty™ Black Chokeberry	3 Gal.		8
	CH	Clethra alnifolia 'Hummingbird'	Hummingbird Summersweet	3 Gal.		7
ORNAMENTAL GRASSES						
	BB	Bouteloua gracilis 'Blonde Ambition'	Blonde Ambition Blue Grama	2 Gal.		36
SYMBOL	CODE	BOTANICAL NAME	COMMON NAME	SIZE	SPACING	QTY
PERENNIALS						
	CP	Carex pensylvanica	Pennsylvania Sedge	1 Gal.	18" o.c.	16
	CZ	Coreopsis verticillata 'Zagreb'	Zagreb Tickseed	1 Gal.	18" o.c.	25
	EM2	Echinacea purpurea 'Magnus'	Magnus Purple Coneflower	1 Gal.	18" o.c.	30
	EM	Eurybia macrophylla	Bigleaf Aster	1 Gal.	18" o.c.	17
	GM	Geranium maculatum	Spotted Geranium	1 Gal.	18" o.c.	7
	HR	Heuchera richardsonii	Prairie Alumroot	1 Gal.	18" o.c.	21
	LK	Liatris spicata 'Kobold'	Kobold Blazing Star	1 Gal.	18" o.c.	10
	PH	Penstemon digitalis 'Husker Red'	Husker Red Beardtongue	1 Gal.	18" o.c.	17
	RH	Rudbeckia hirta	Black-eyed Susan	1 Gal.	15" o.c.	16

0 5' 10' 20'
SCALE: 1" = 10'-0"

RVi
22 East Chicago Avenue
Suite 200a
Naperville, IL 60540
Tel: 312.634.2100
www.rvilanning.com

PREPARED FOR
CITY OF LAKE FOREST

800 N. FIELD DRIVE
LAKE FOREST, ILLINOIS 60045

CONSULTANTS

CIVIL ENGINEER
HEY AND ASSOCIATES, INC.
26575 W. COMMERCE DRIVE
SUITE 601
VOLO, ILLINOIS 60073
T 847.740.0888

ELECTRICAL ENGINEER
NOVA ENGINEERING, PC
2338 S. CLINE AVENUE
SCHERERVILLE, INDIANA 46375
T 219.865.3352

SOUTH PARK PHASE TWO

ISSUE FOR BID
150 S. MAYWOOD RD.
LAKE FOREST, ILLINOIS 60045

PROJECT NO:	26000793
DATE:	10/28/2026
DRAWN:	MDB/AMM
REVIEWED:	LJL

OCTOBER 28, 2026
REVISIONS:

NO.	DATE	ISSUE

PLANTING PLAN - ENLARGEMENT

L4.2

01_ORIGINAL ISSUE

L:\2026\26000793 south park ph2\05 production\03 CD\01 current plans\L4.0 Planting Plan.dwg 10/28/2026 mirandi berger

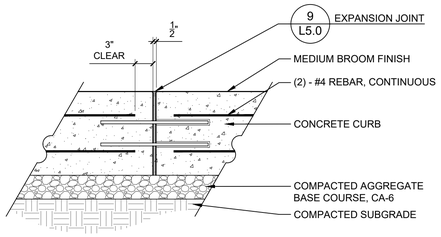

NOTE:
PLACE EXPANSION JOINTS 30' O.C. UNLESS OTHERWISE NOTED.

11 EXPANSION JOINT AT CONCRETE CURB

1" = 1'-0"

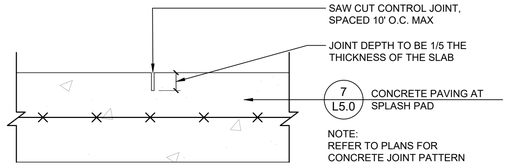

NOTE:
REFER TO PLANS FOR
CONCRETE JOINT PATTERN

12 SAWCUT CONTROL JOINT AT SPLASH PAD

3" = 1'-0"

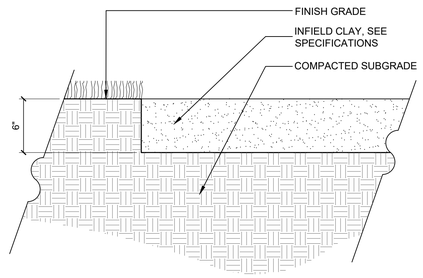

13 INFIELD MIX

1/8" = 1'-0"

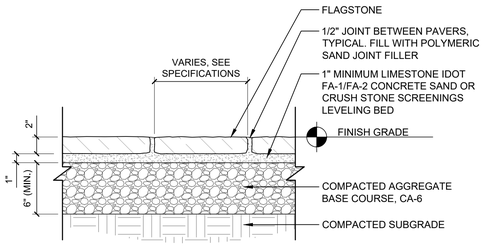

14 FLAGSTONE PAVING

1 1/2" = 1'-0"

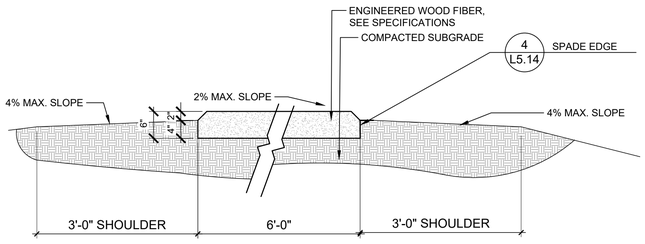

15 ENGINEERED WOOD FIBER

3/4" = 1'-0"

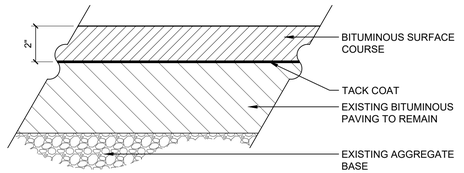

5 ASPHALT PATCHING

3" = 1'-0"

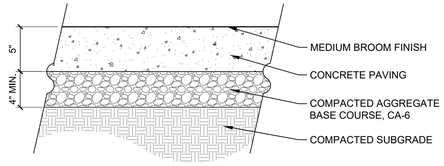

6 CONCRETE PAVING - PEDESTRIAN

1 1/2" = 1'-0"

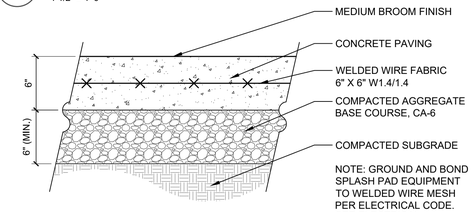

7 CONCRETE PAVING AT SPLASH PAD

1 1/2" = 1'-0"

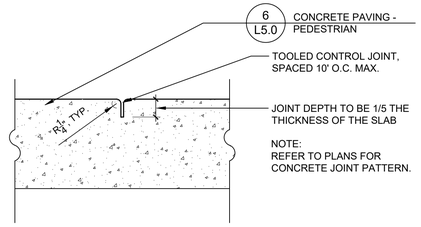

8 CONTROL JOINT

3" = 1'-0"

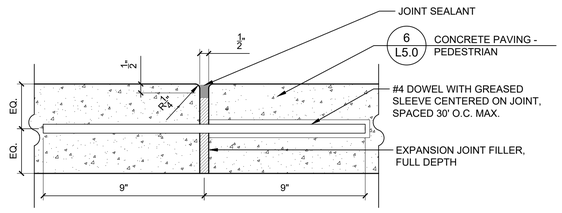

9 EXPANSION JOINT

3" = 1'-0"

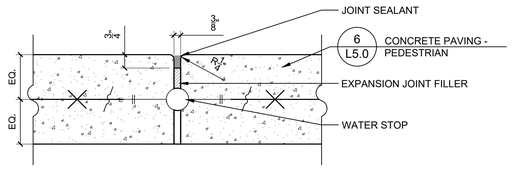

10 EXPANSION JOINT AT SPLASH PAD

3" = 1'-0"

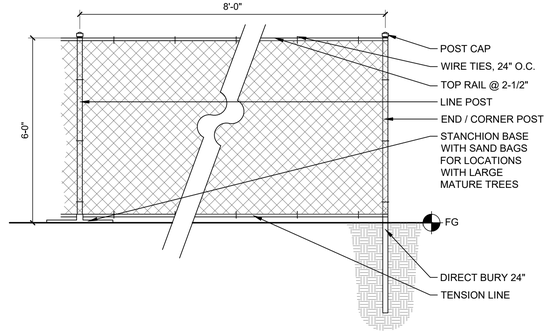

1 TEMPORARY CONSTRUCTION FENCE

1/2" = 1'-0"

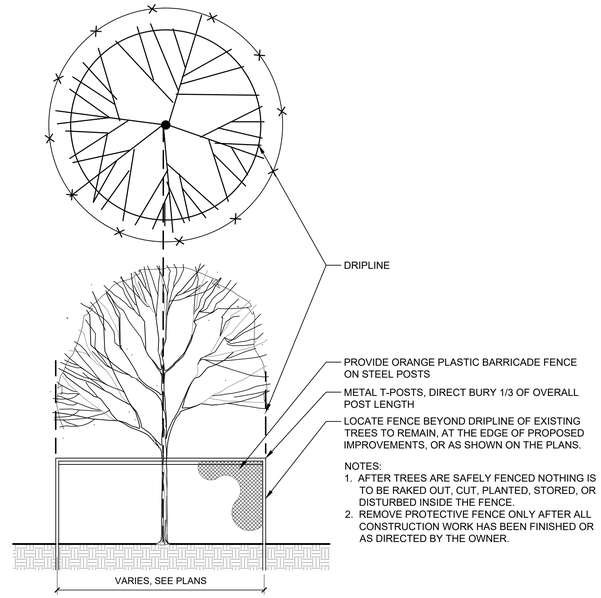

2 TREE PROTECTION FENCE

1/2" = 1'-0"

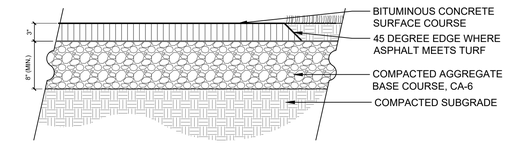

3 ASPHALT PAVING - PEDESTRIAN

1" = 1'-0"

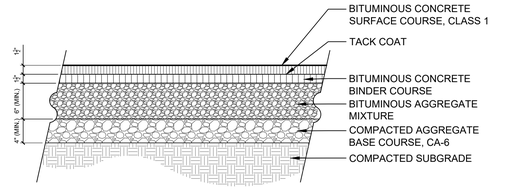

4 ASPHALT PAVING - VEHICULAR

1" = 1'-0"

RVi
22 East Chicago Avenue
Suite 200a
Naperville, IL 60540
Tel: 312.634.2100
www.rviplanning.com

PREPARED FOR
CITY OF LAKE FOREST

800 N. FIELD DRIVE
LAKE FOREST, ILLINOIS 60045

CONSULTANTS

CIVIL ENGINEER
HEY AND ASSOCIATES, INC.
26575 W. COMMERCE DRIVE
SUITE 601
VOLO, ILLINOIS 60073
T 847.740.0888

ELECTRICAL ENGINEER
NOVA ENGINEERING, PC
2338 S. CLINE AVENUE
SCHERERVILLE, INDIANA 46375
T 219.865.3352

SOUTH PARK PHASE TWO

ISSUE FOR BID
150 S. MAYWOOD RD.
LAKE FOREST, ILLINOIS 60045

PROJECT NO:	26000793
DATE:	10/28/2026
DRAWN:	MDB/AMM
REVIEWED:	LJL

OCTOBER 28, 2026
REVISIONS:

NO.	DATE	ISSUE

DETAILS

L5.0

01_ORIGINAL ISSUE

L:\2026\26000793 south park ph2\05 production\03 CD\01 current plans\L5.0 Details.dwg 10/28/2026 miranda berger

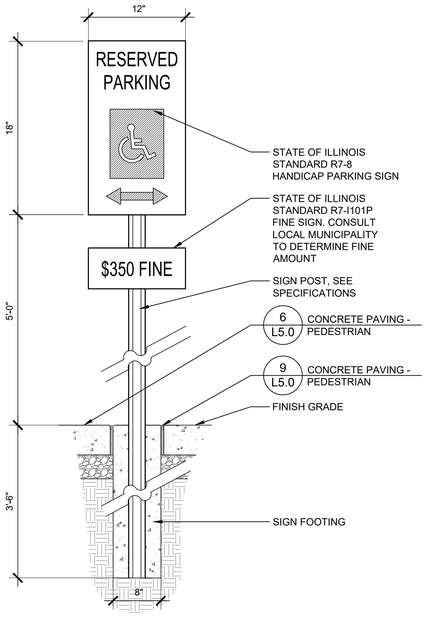

6 ADA PARKING SIGN

N.T.S.

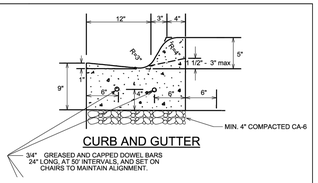

CURB AND GUTTER

3/4" GREASED AND CAPPED DOWEL BARS 24" LONG, AT 50' INTERVALS, AND SET ON CHAIRS TO MAINTAIN ALIGNMENT.

1. INSTALL PREFORMED EXPANSION JOINT FILLER, BITUMEN TREATED, CUT TO SHAPE OF CURB AND GUTTER, BARRIER CURB OR INTEGRAL CURB, AT 50' INTERVALS.
2. SAWCUT CONTRACTION JOINTS AT 25' INTERVALS
3. TWO (2) 10 FEET LONG NO. 4 RE-BARS OVER ALL TRENCHES
4. TWO CONTINUOUS NO.4 RE-BARS ARE TO BE INSTALLED IN ALL BARRIER CURB.
5. TWO (2) 24 INCH LONG NO. 4 DOWEL BARS AT ALL CONNECTIONS BETWEEN NEW CURB AND EXISTING CURB AND AT ALL EXPANSION JOINTS.
6. CONTRACTOR MUST CALL FOR AN INSPECTION PRIOR TO POURING THE CURB.

STANDARD CURB SECTIONS

LAKE FOREST STANDARD 2.06
APPROVED BY : KMM
DATE : 1/1/2006
G:\Engineer\Standard Details\Standard Curb 2-06

3 CURB AND GUTTER

N.T.S.

TYPICAL CROSSWALK

NTS

LAKE FOREST STANDARD
APPROVED BY : KMM
DATE : 11/18/2010
G:\Engineer\Standard Details\ Crosswalk

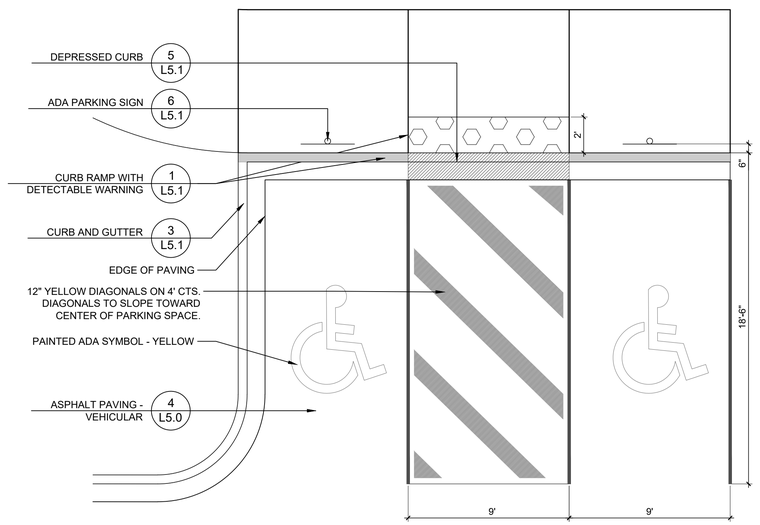

7 ADA PARKING MARKING LAYOUT

1/4" = 1'-0"

4 CROSSWALK STRIPING

N.T.S.

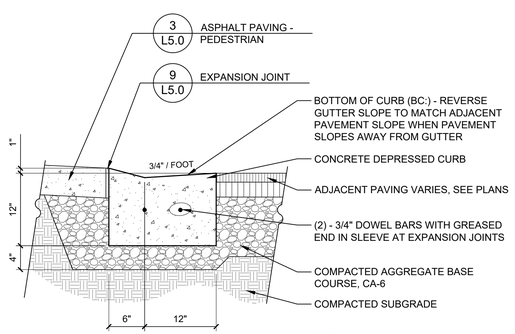

NOTE:
PLACE EXPANSION JOINTS 30' O.C. AND CONTROL JOINTS 10' O.C. MAXIMUM UNLESS OTHERWISE NOTED.

5 DEPRESSED CURB

1" = 1'-0"

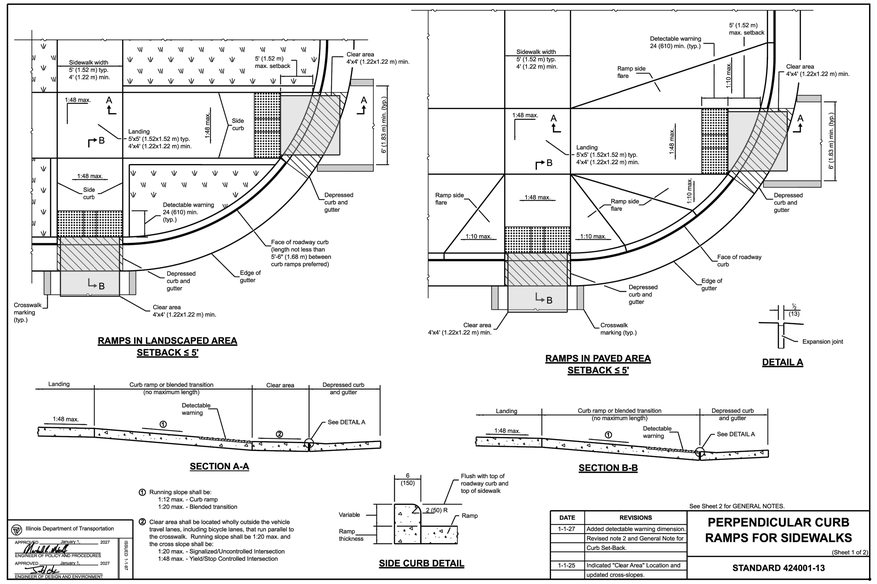

DATE	REVISIONS
1-1-27	Added detectable warning dimension.
	Revised note 2 and General Note for
	Curb Set-Back.
1-1-25	Indicated "Clear Area" Location and
	updated cross-slopes.

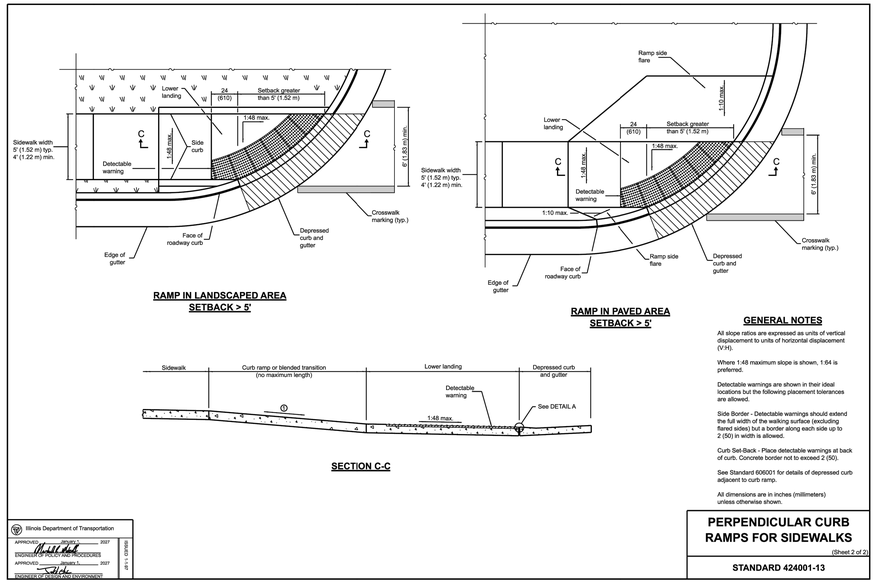

1 CURB RAMP WITH DETECTABLE WARNING

N.T.S.

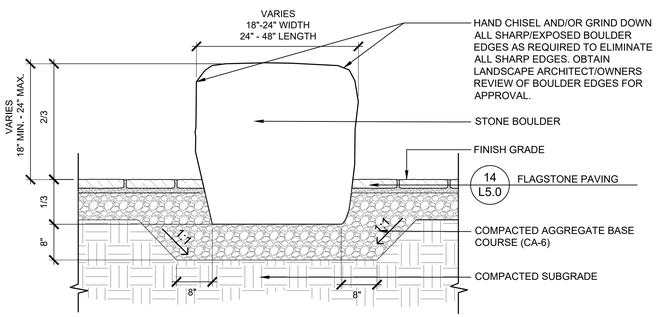

2 LIMESTONE BOULDERS AT SPLASHPAD

3/4" = 1'-0"

RVi
22 East Chicago Avenue
Suite 200a
Naperville, IL 60540
Tel: 312.634.2100
www.rvilanning.com

PREPARED FOR
CITY OF LAKE FOREST

800 N. FIELD DRIVE
LAKE FOREST, ILLINOIS 60045

CONSULTANTS

CIVIL ENGINEER
HEY AND ASSOCIATES, INC.
26575 W. COMMERCE DRIVE
SUITE 601
VOLO, ILLINOIS 60073
T 847.740.0888

ELECTRICAL ENGINEER
NOVA ENGINEERING, PC
2338 S. CLINE AVENUE
SCHERERVILLE, INDIANA 46375
T 219.865.3352

SOUTH PARK PHASE TWO

ISSUE FOR BID
150 S. MAYWOOD RD.
LAKE FOREST, ILLINOIS 60045

PROJECT NO:	26000793
DATE:	10/28/2026
DRAWN:	MDB/AMM
REVIEWED:	LJL

OCTOBER 28, 2026
REVISIONS:

NO.	DATE	ISSUE

DETAILS

L5.1

01_ORIGINAL ISSUE

L:\2026\26000793 south park ph2\05 production\03 CD\01 current plans\L5.0 Details.dwg 10/28/2026 miranda berger

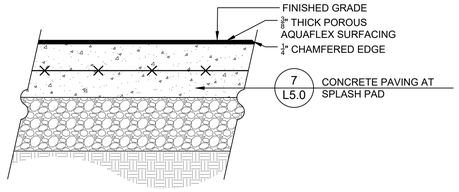

7 AQUAFLEX SURFACING AT SPLASH PAD

1 1/2" = 1'-0"

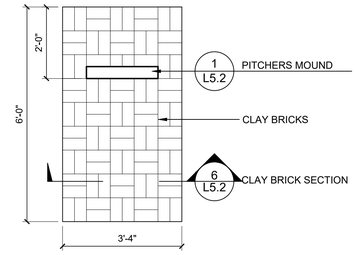

5 CLAY BRICK PITCHER'S PLATE

1/2" = 1'-0"

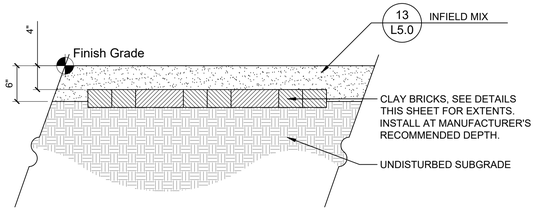

6 CLAY BRICK SECTION

1" = 1'-0"

8 SPLASH PAD DIAGRAM

N.T.S

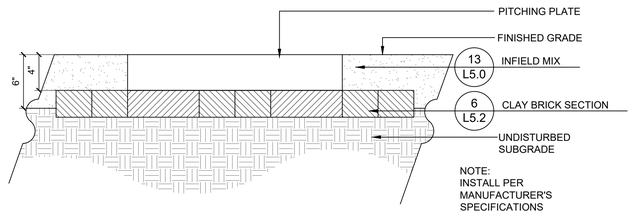

1 PITCHERS MOUND

1/8" = 1'-0"

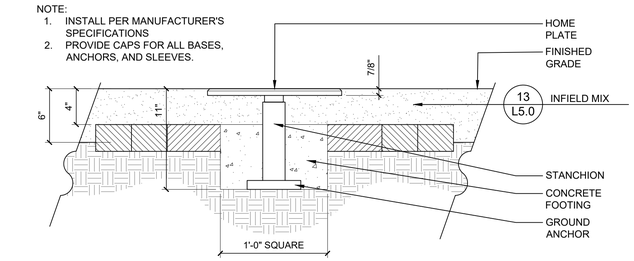

2 HOME PLATE

1/8" = 1'-0"

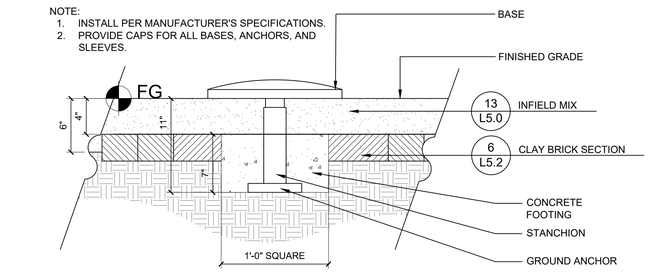

3 INFIELD BASES

1/8" = 1'-0"

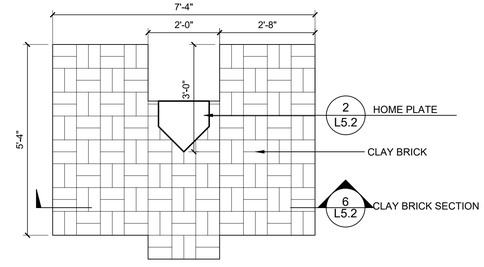

4 CLAY BRICK BATTER'S BOX

1/2" = 1'-0"

RVi
22 East Chicago Avenue
Suite 200a
Naperville, IL 60540
Tel: 312.634.2100
www.rviplanning.com

PREPARED FOR

CITY OF LAKE FOREST

800 N. FIELD DRIVE
LAKE FOREST, ILLINOIS 60045

CONSULTANTS

CIVIL ENGINEER
HEY AND ASSOCIATES, INC.
26575 W. COMMERCE DRIVE
SUITE 601
VOLO, ILLINOIS 60073
T 847.740.0888

ELECTRICAL ENGINEER
NOVA ENGINEERING, PC
2338 S. CLINE AVENUE
SCHERERVILLE, INDIANA 46375
T 219.865.3352

SOUTH PARK PHASE TWO

ISSUE FOR BID
150 S. MAYWOOD RD.
LAKE FOREST, ILLINOIS 60045

PROJECT NO:	26000793
DATE:	10/28/2026
DRAWN:	MDB/AMM
REVIEWED:	LJL

OCTOBER 28, 2026
REVISIONS:

NO.	DATE	ISSUE

DETAILS

L5.2

01_ORIGINAL ISSUE

L:\2026\26000793 south park ph2\05 production\03 CD\01 current plans\L5.0 Details.dwg 10/28/2026 miranci berger

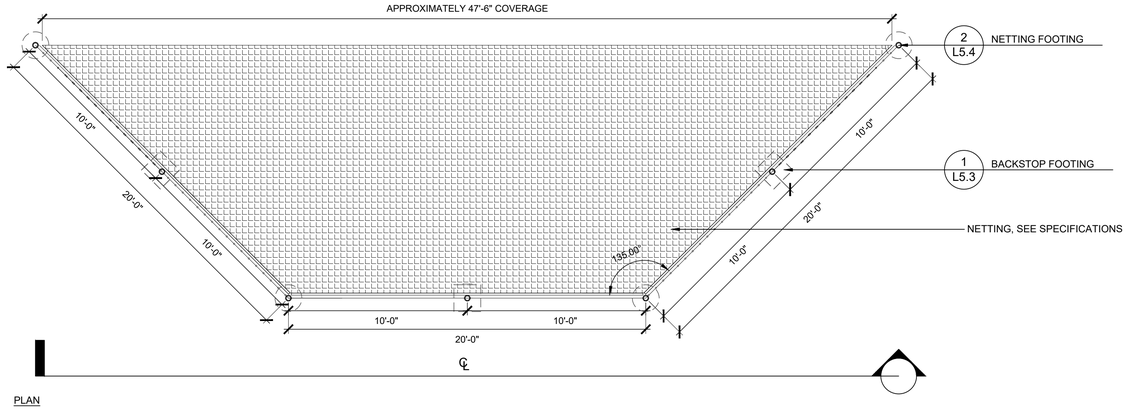

PLAN

ELEVATION/SECTION

NOTE: ALL FABRIC AND POSTS TO BE PVC COATED, COLOR: BLACK, SEE SPECIFICATION

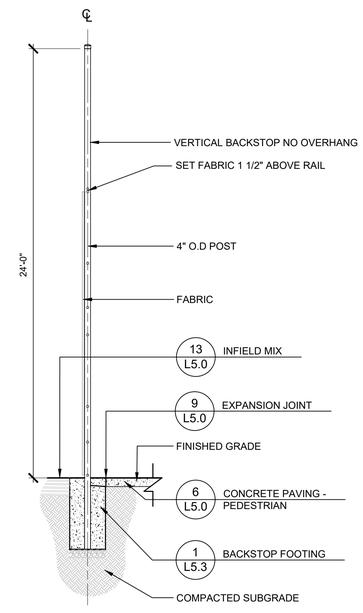

NOTE: ALL BACKSTOP POSTS AND CHAIN LINK FABRIC TO BE PVC COATED, COLOR: BLACK SEE SPECIFICATIONS

FENCE SCHEDULE

FENCE TYPE	HEIGHT	MID RAIL HEIGHT	FABRIC (HEIGHT/GAUGE, MESH)	FABRIC SELVAGE (TOP AND BOTTOM)	FOOTING DEPTH	FOOTING DIAMETER	CORNER/ END POSTS	LINE POSTS	POST SPACING	TOP RAIL	BRACE RAIL	BOTTOM RAIL	TRUSS ROD W/ TURNBUCKLE	TENSION WIRE	PVC COATED	POST CAP
BACKSTOP	24'-0"	N/A	2" MESH 8GA./ 5GA.	KNUCKLE	48"	2'-0"	8"	4"	10'-0"	1 5/8"	1 5/8"	1 5/8"	N/A	N/A	BLACK	DOME

5 BACKSTOP

1/4" = 1'-0"

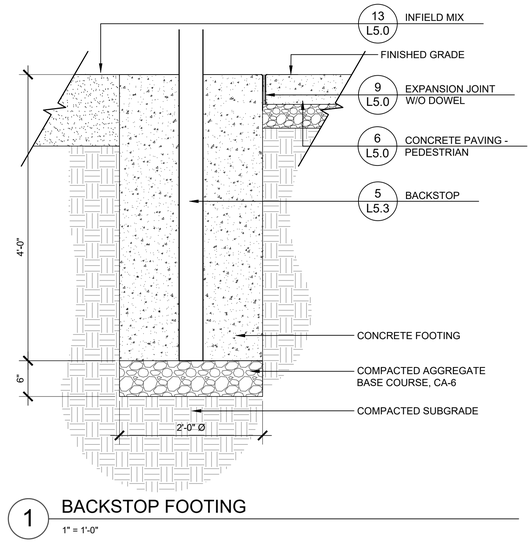

1 BACKSTOP FOOTING

1" = 1'-0"

RVi
22 East Chicago Avenue
Suite 200a
Naperville, IL 60540
Tel: 312.634.2100
www.rviplanning.com

PREPARED FOR

CITY OF LAKE FOREST

800 N. FIELD DRIVE
LAKE FOREST, ILLINOIS 60045

CONSULTANTS

CIVIL ENGINEER
HEY AND ASSOCIATES, INC.
26575 W. COMMERCE DRIVE
SUITE 601
VOLO, ILLINOIS 60073
T 847.740.0888

ELECTRICAL ENGINEER
NOVA ENGINEERING, PC
2338 S. CLINE AVENUE
SCHERERVILLE, INDIANA 46375
T 219.865.3352

SOUTH PARK PHASE TWO

ISSUE FOR BID
150 S. MAYWOOD RD.
LAKE FOREST, ILLINOIS 60045

PROJECT NO:	26000793
DATE:	10/28/2026
DRAWN:	MDB/AMM
REVIEWED:	LJL

OCTOBER 28, 2026

REVISIONS:

NO.	DATE	ISSUE

DETAILS

L5.3

01_ORIGINAL ISSUE

L:\2026\26000793 south park ph2\05 production\03 CD\01 current plans\L5.0 Details.dwg 10/28/2026 mirandi berger

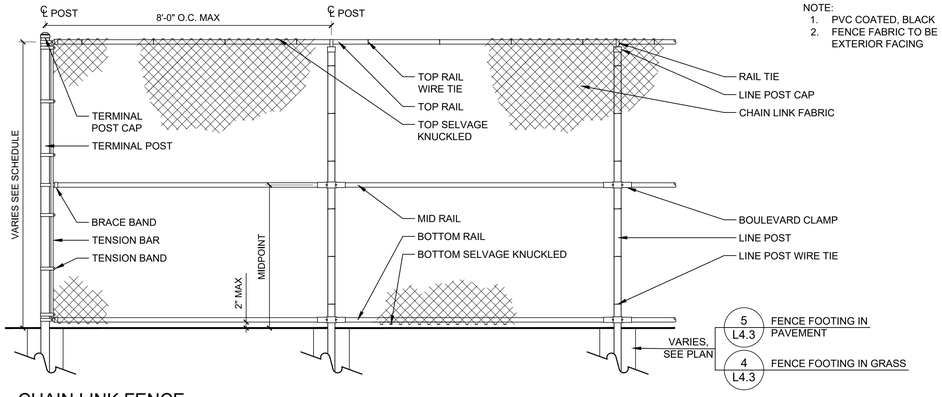

3 CHAIN LINK FENCE

1/2" = 1'-0"

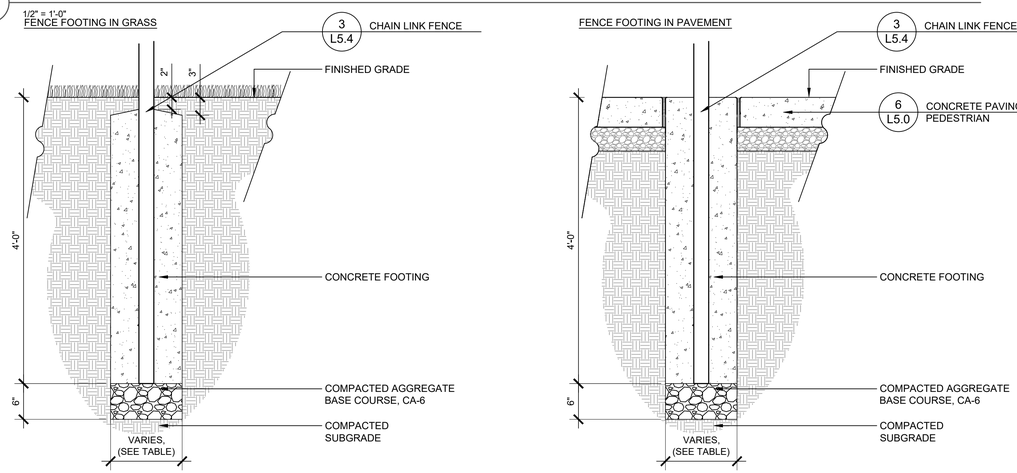

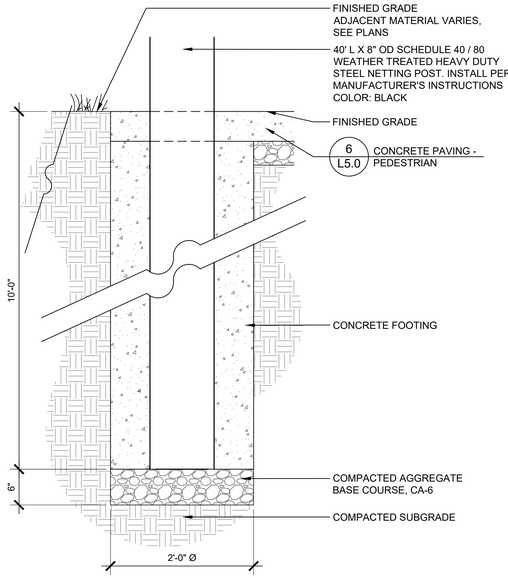

2 NETTING FOOTING

1" = 1'-0"

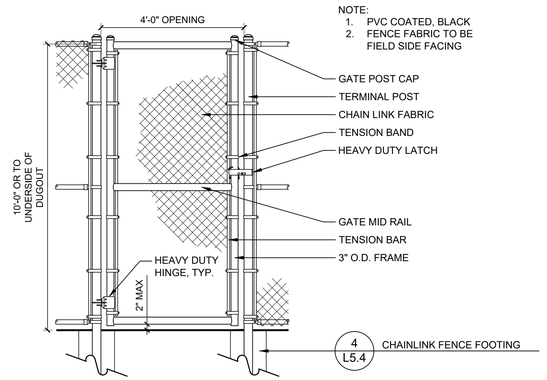

1 SINGLE SWING GATE

1/2" = 1'-0"

4 CHAINLINK FENCE FOOTING

1" = 1'-0"

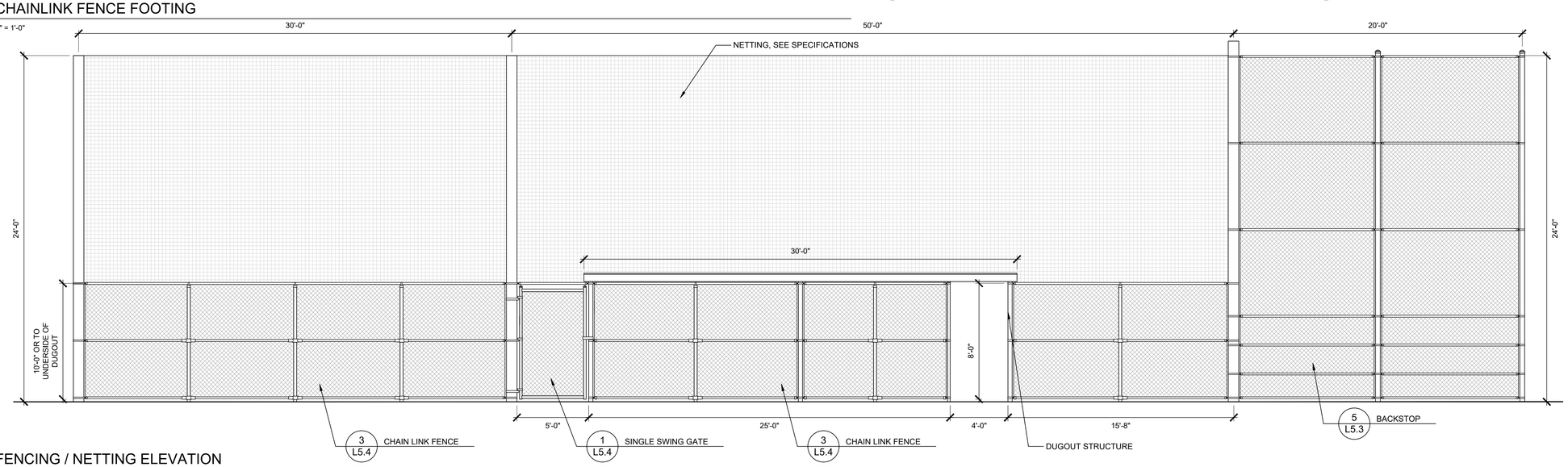

5 FENCING / NETTING ELEVATION

1/4" = 1'-0"

RVi
22 East Chicago Avenue
Suite 200a
Naperville, IL 60540
Tel: 312.634.2100
www.rviplanning.com

PREPARED FOR

CITY OF LAKE FOREST

800 N. FIELD DRIVE
LAKE FOREST, ILLINOIS 60045

CONSULTANTS

CIVIL ENGINEER
HEY AND ASSOCIATES, INC.
26575 W. COMMERCE DRIVE
SUITE 601
VOLO, ILLINOIS 60073
T 847.740.0888

ELECTRICAL ENGINEER
NOVA ENGINEERING, PC
2338 S. CLINE AVENUE
SCHERERVILLE, INDIANA 46375
T 219.865.3352

SOUTH PARK PHASE TWO

ISSUE FOR BID
150 S. MAYWOOD RD.
LAKE FOREST, ILLINOIS 60045

PROJECT NO:	26000793
DATE:	10/28/2026
DRAWN:	MDB/AMM
REVIEWED:	LJL

OCTOBER 28, 2026
REVISIONS:

NO.	DATE	ISSUE

DETAILS

L5.4

01_ORIGINAL ISSUE

L:\2026\26000793 south park ph2\05 production\03 CD\01 current plans\L5 0 Details.dwg 10/28/2026 mirandi berger

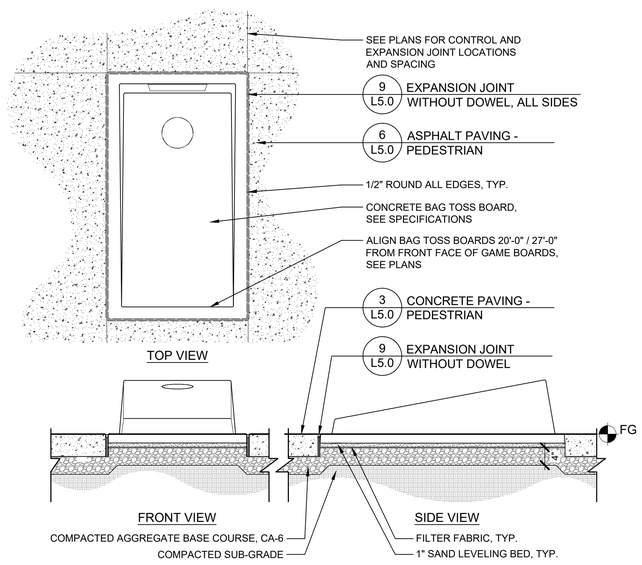

6 BAG TOSS BOARDS

3/4" = 1'-0"

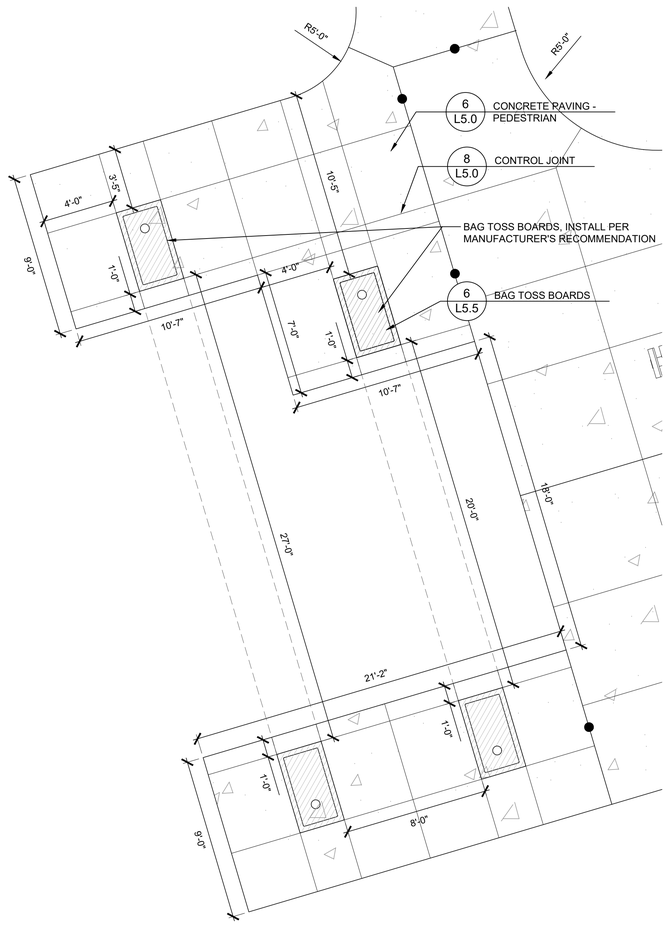

7 BAG TOSS LAYOUT

1/4" = 1'-0"

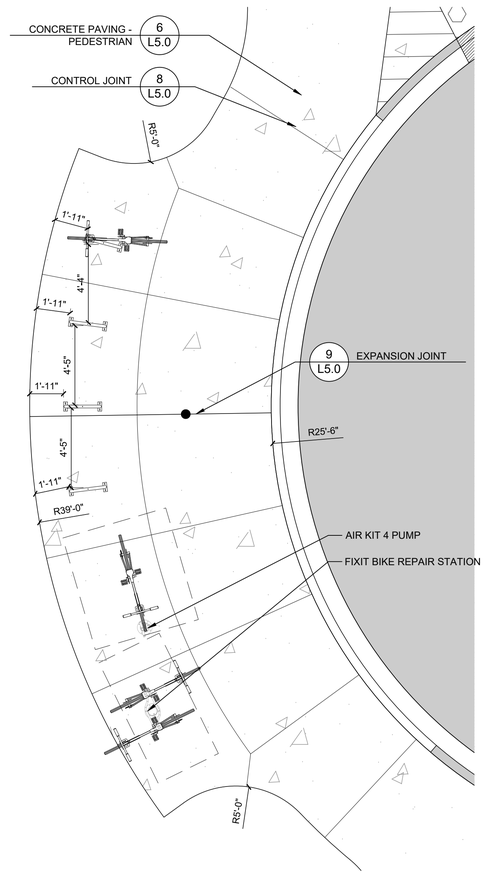

4 BIKE RACK AND REPAIR STATION ENLARGEMENT

1/4" = 1'-0"

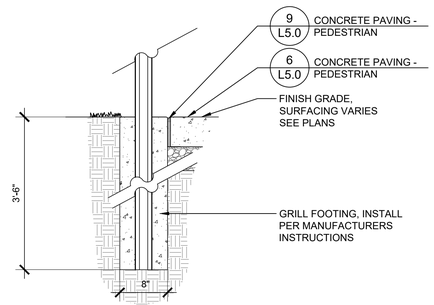

5 GRILL FOOTING

1/8"=1'-0"

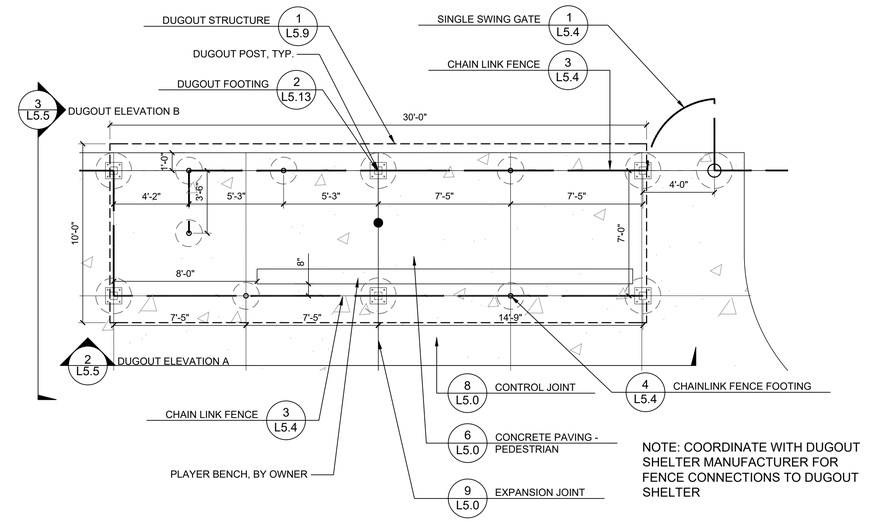

NOTE: COORDINATE WITH DUGOUT SHELTER MANUFACTURER FOR FENCE CONNECTIONS TO DUGOUT SHELTER

1 DUGOUT ENLARGEMENT

1/4" = 1'-0"

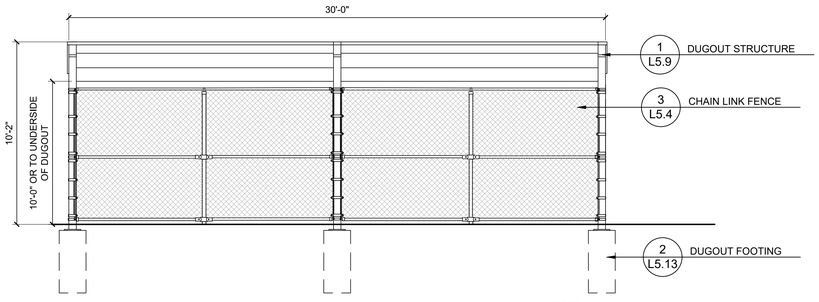

NOTE:
1. CONFIRM FENCE HEIGHTS WITH INSTALLED DUGOUT STRUCTURE TO ENSURE NO GAP IS LARGER THAN 4" MAXIMUM
2. ATTACH FENCING TO DUGOUT POSTS, COORDINATE WITH MANUFACTURER AND DUGOUT CONTRACTOR

2 DUGOUT ELEVATION A

1/4" = 1'-0"

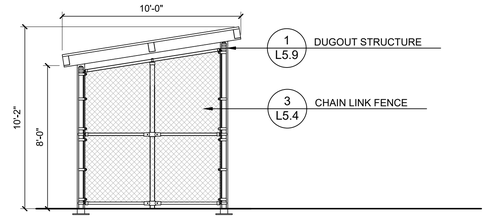

NOTE:
1. CONFIRM FENCE HEIGHTS WITH INSTALLED DUGOUT STRUCTURE TO ENSURE NO GAP IS LARGER THAN 4" MAXIMUM
2. ATTACH FENCING TO DUGOUT POSTS, COORDINATE WITH MANUFACTURER AND DUGOUT CONTRACTOR

3 DUGOUT ELEVATION B

1/4" = 1'-0"

RVi
22 East Chicago Avenue
Suite 200a
Naperville, IL 60540
Tel: 312.634.2100
www.rviplanning.com

PREPARED FOR

CITY OF LAKE FOREST

800 N. FIELD DRIVE
LAKE FOREST, ILLINOIS 60045

CONSULTANTS

CIVIL ENGINEER
HEY AND ASSOCIATES, INC.
26575 W. COMMERCE DRIVE
SUITE 601
VOLO, ILLINOIS 60073
T 847.740.0888

ELECTRICAL ENGINEER
NOVA ENGINEERING, PC
2338 S. CLINE AVENUE
SCHERERVILLE, INDIANA 46375
T 219.865.3352

SOUTH PARK PHASE TWO

ISSUE FOR BID
150 S. MAYWOOD RD.
LAKE FOREST, ILLINOIS 60045

PROJECT NO:	26000793
DATE:	10/28/2026
DRAWN:	MDB/AMM
REVIEWED:	LJL

OCTOBER 28, 2026
REVISIONS:

NO.	DATE	ISSUE

DETAILS

L5.5

01_ORIGINAL ISSUE

L:\26\26000793 south park ph2\05 production\03 CD\01 current plans\L5.0 Details.dwg 10/28/2026 miranda.berger

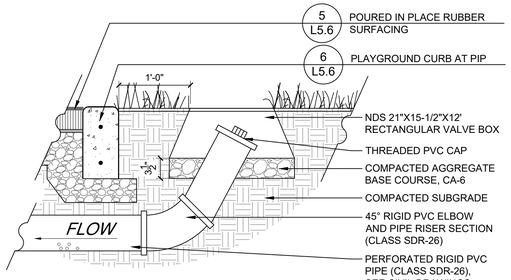

7 PLAYGROUND CLEANOUT AT POURED IN PLACE

1" = 1'-0"

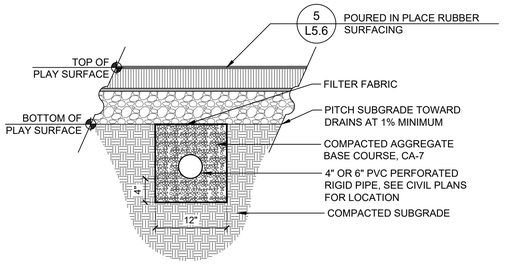

8 PLAYGROUND UNDERDRAIN

1" = 1'-0"

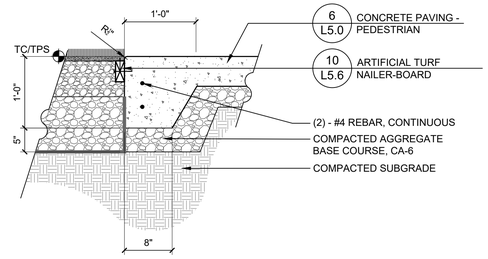

9 THICKENED EDGE CONCRETE PAVING AT ARTIFICIAL TURF

1" = 1'-0"

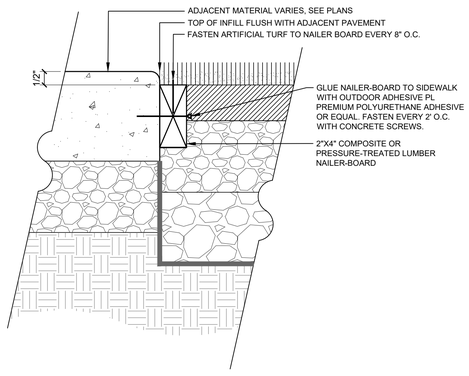

10 ARTIFICIAL TURF NAILER-BOARD

3" = 1'-0"

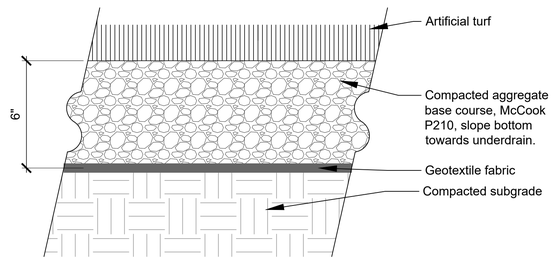

3 ARTIFICIAL TURF

3" = 1'-0"

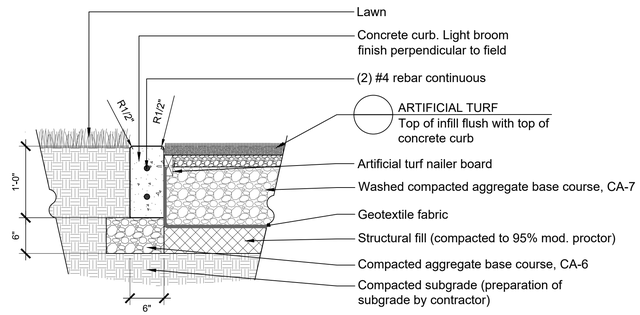

Note: Place expansion joints at 30 ft. on center maximum and control joints at 10 ft. on center maximum

4 CONCRETE CURB AT ARTIFICIAL TURF

1" = 1'-0"

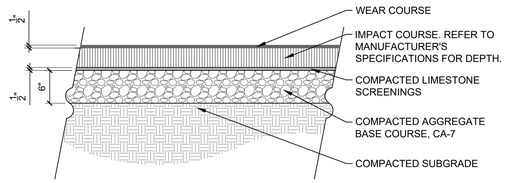

NOTES:
1. REFER TO MANUFACTURER'S INSTRUCTIONS FOR INSTALLATION.
2. STONE BASE AND SUBGRADE PITCHED AT 2% TOWARD UNDERDRAINS.

5 POURED IN PLACE RUBBER SURFACING

1" = 1'-0"

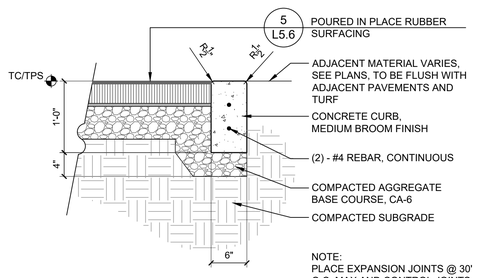

NOTE:
PLACE EXPANSION JOINTS @ 30' O.C. MAX AND CONTROL JOINTS @10' O.C. MAX

6 PLAYGROUND CURB AT PIP

1" = 1'-0"

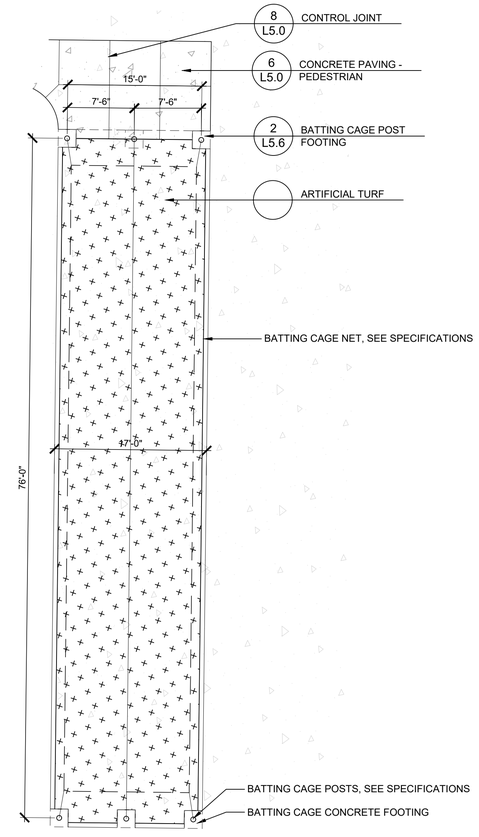

1 BATTING CAGE LAYOUT

1/8" = 1'-0"

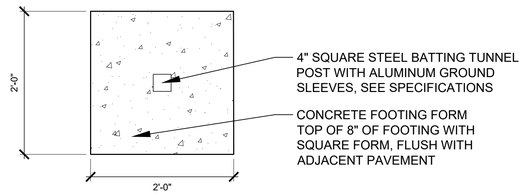

BATTING TUNNEL STEEL POST MOUNTING AT CONCRETE EDGE

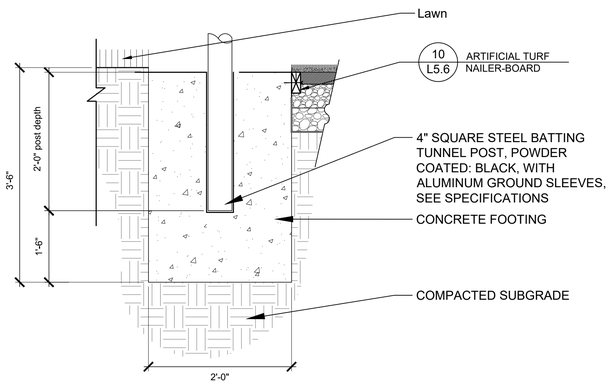

2 BATTING CAGE POST FOOTING

1" = 1'-0"

RVi
22 East Chicago Avenue
Suite 200a
Naperville, IL 60540
Tel: 312.634.2100
www.rvilanning.com

PREPARED FOR
CITY OF LAKE FOREST

800 N. FIELD DRIVE
LAKE FOREST, ILLINOIS 60045

CONSULTANTS

CIVIL ENGINEER
HEY AND ASSOCIATES, INC.
26575 W. COMMERCE DRIVE
SUITE 601
VOLO, ILLINOIS 60073
T 847.740.0888

ELECTRICAL ENGINEER
NOVA ENGINEERING, PC
2338 S. CLINE AVENUE
SCHERERVILLE, INDIANA 46375
T 219.865.3352

SOUTH PARK PHASE TWO

ISSUE FOR BID
150 S. MAYWOOD RD.
LAKE FOREST, ILLINOIS 60045

PROJECT NO:	26000793
DATE:	10/28/2026
DRAWN:	MDB/AMM
REVIEWED:	LJL

OCTOBER 28, 2026
REVISIONS:

NO.	DATE	ISSUE

DETAILS

L5.6

01_ORIGINAL ISSUE

L:\2026\26000793 south park ph2\05 production\03 CD\01 current plans\L5.0 Details.dwg 10/28/2026 mirandl.berger

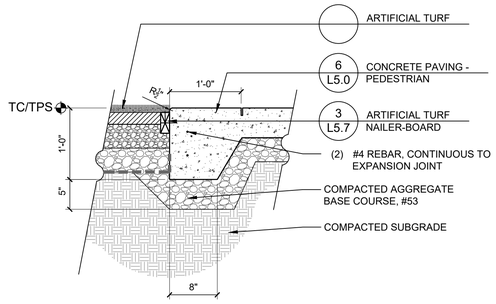

2 THICKENED EDGE CONCRETE PAVING

1" = 1'-0"

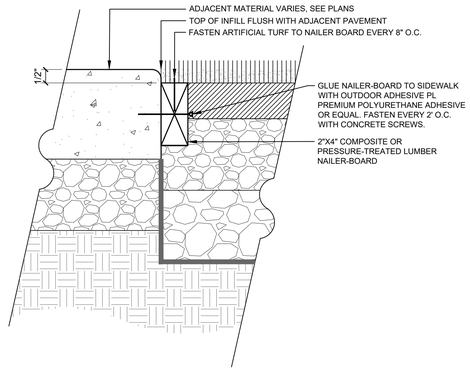

3 ARTIFICIAL TURF NAILER-BOARD

3" = 1'-0"

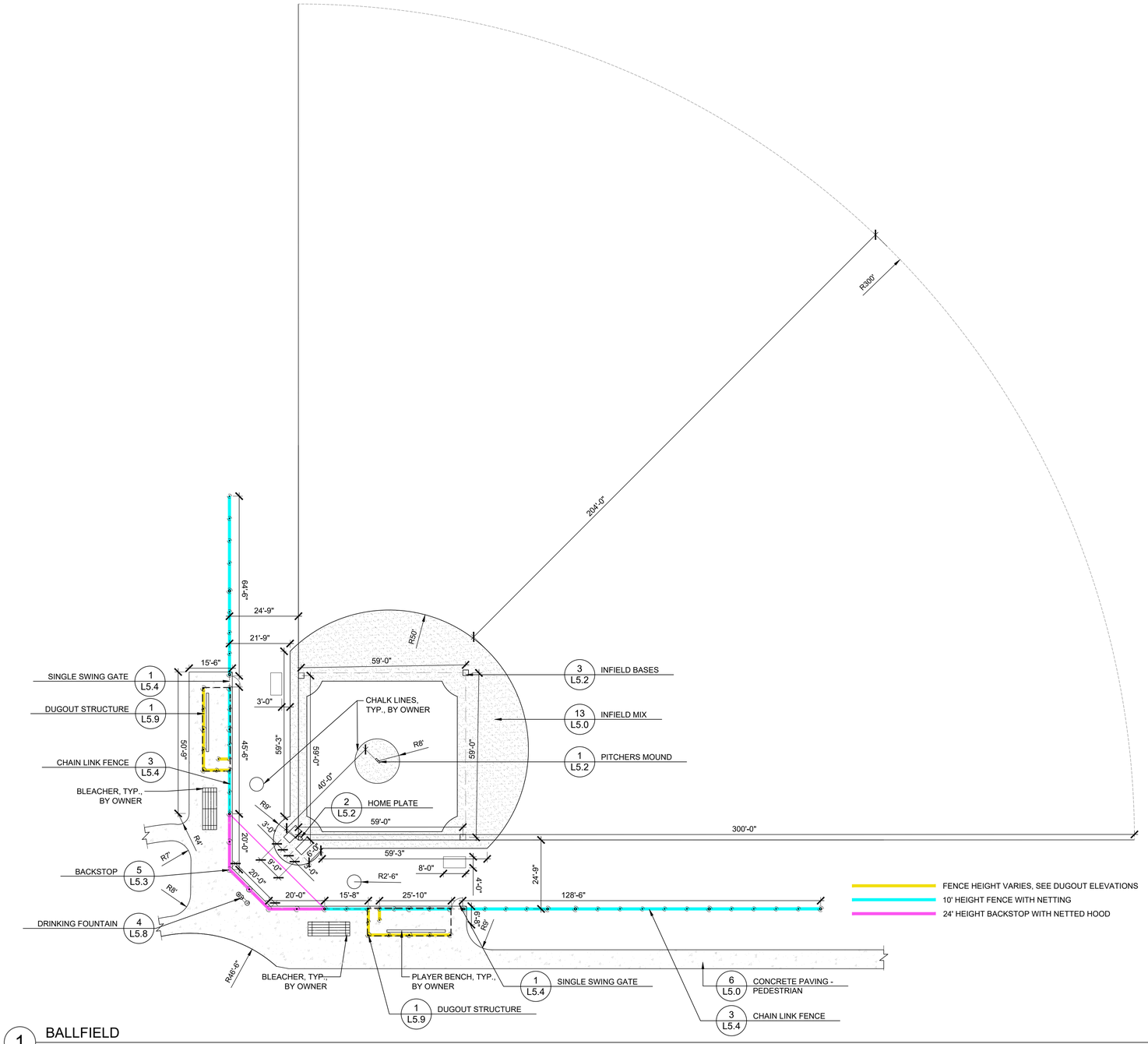

1 BALLFIELD

1" = 20'

P-NN-CIT-SOUT-86

RVi
22 East Chicago Avenue
Suite 200a
Naperville, IL 60540
Tel: 312.634.2100
www.rviplanning.com

PREPARED FOR

CITY OF LAKE FOREST

800 N. FIELD DRIVE
LAKE FOREST, ILLINOIS 60045

CONSULTANTS

CIVIL ENGINEER
HEY AND ASSOCIATES, INC.
26575 W. COMMERCE DRIVE
SUITE 601
VOLO, ILLINOIS 60073
T 847.740.0888

ELECTRICAL ENGINEER
NOVA ENGINEERING, PC
2338 S. CLINE AVENUE
SCHERERVILLE, INDIANA 46375
T 219.865.3352

SOUTH PARK PHASE TWO

ISSUE FOR BID
150 S. MAYWOOD RD.
LAKE FOREST, ILLINOIS 60045

PROJECT NO:	26000793
DATE:	10/28/2026
DRAWN:	MDB/AMM
REVIEWED:	LJL

OCTOBER 28, 2026
REVISIONS:

NO.	DATE	ISSUE

DETAILS

L5.7

01_ORIGINAL ISSUE

L:\2026\26000793 south park ph2\05 production\03 CD\01 current plans\L5.0 Details.dwg 10/28/2026 miranda berger

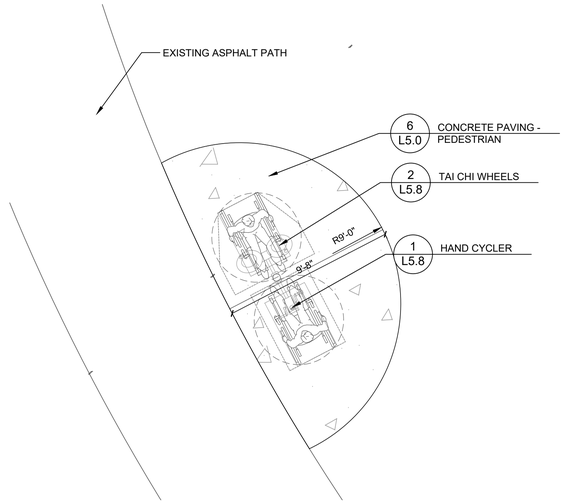

3 FITNESS STATION ENLARGEMENT

1/4" = 1'-0"

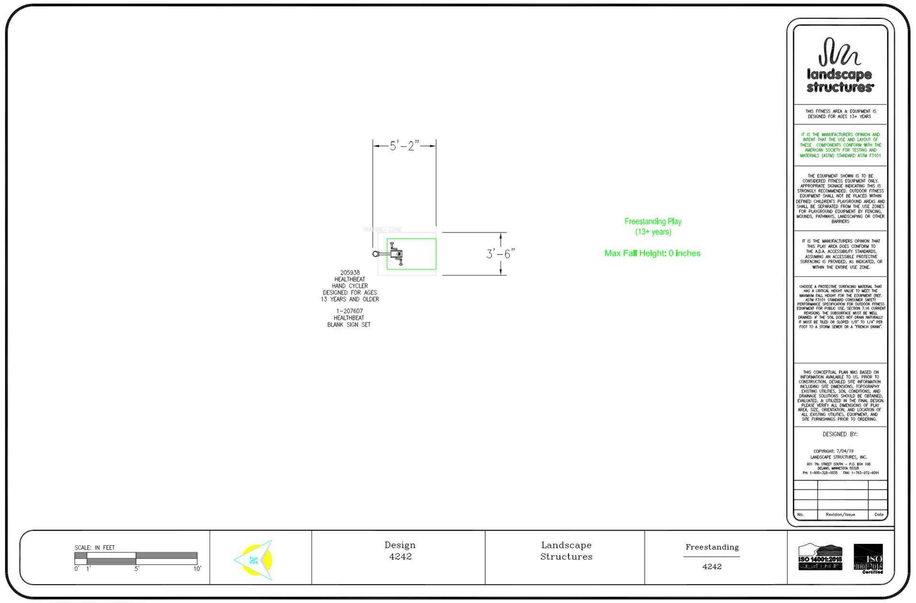

1 HAND CYCLER

N.T.S.

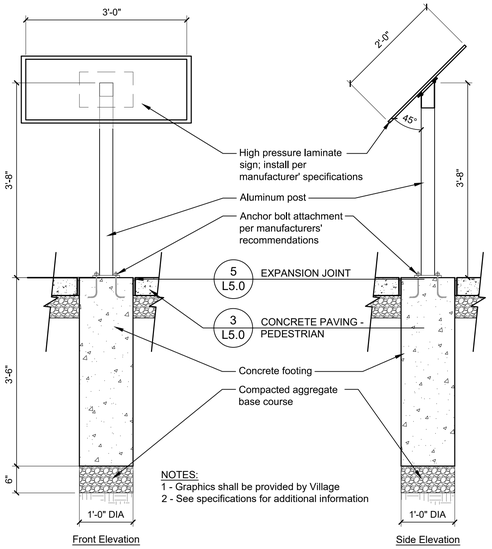

5 INTERPRETIVE SIGN

3/4" = 1'-0"

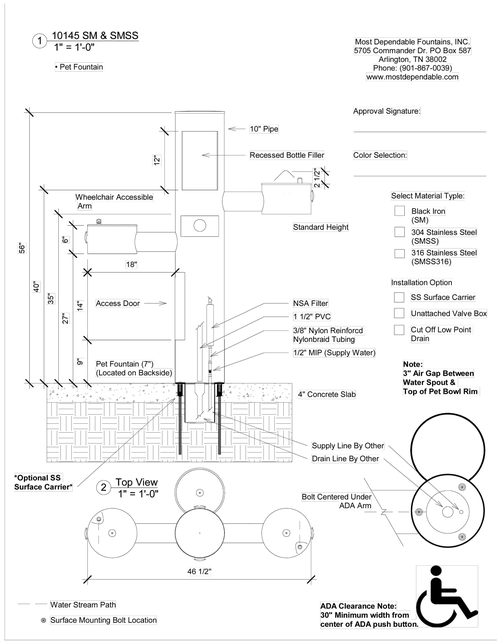

4 DRINKING FOUNTAIN

N.T.S.

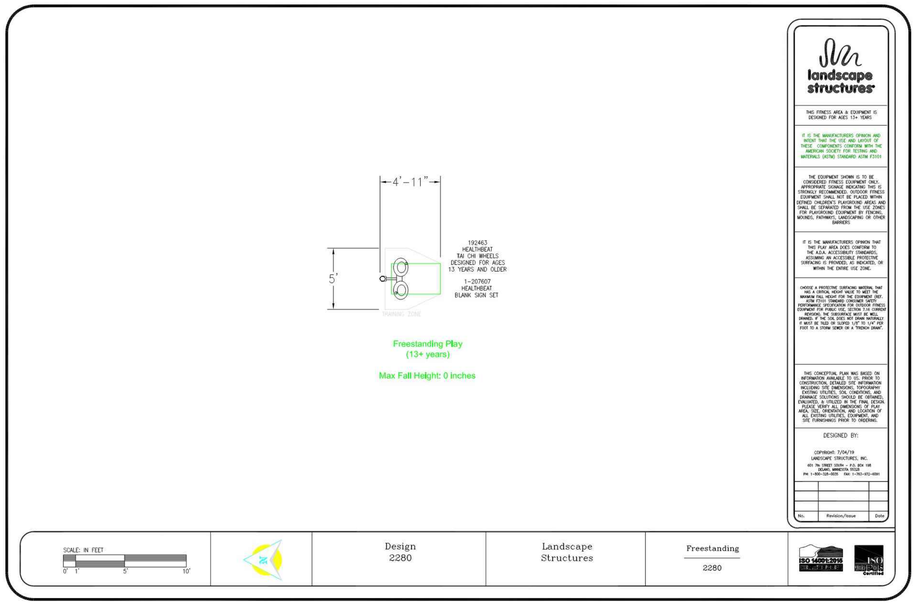

2 TAI CHI WHEELS

N.T.S.

RVi
22 East Chicago Avenue
Suite 200a
Naperville, IL 60540
Tel: 312.634.2100
www.rviplanning.com

PREPARED FOR

CITY OF LAKE FOREST

800 N. FIELD DRIVE
LAKE FOREST, ILLINOIS 60045

CONSULTANTS

CIVIL ENGINEER
HEY AND ASSOCIATES, INC.
26575 W. COMMERCE DRIVE
SUITE 601
VOLO, ILLINOIS 60073
T 847.740.0888

ELECTRICAL ENGINEER
NOVA ENGINEERING, PC
2338 S. CLINE AVENUE
SCHERERVILLE, INDIANA 46375
T 219.865.3352

SOUTH PARK PHASE TWO

ISSUE FOR BID
150 S. MAYWOOD RD.
LAKE FOREST, ILLINOIS 60045

PROJECT NO:	26000793
DATE:	10/28/2026
DRAWN:	MDB/AMM
REVIEWED:	LJL

OCTOBER 28, 2026
REVISIONS:

NO.	DATE	ISSUE

DETAILS

L5.8

01_ORIGINAL ISSUE

L:\2026\26000793 south park ph2\05 production\03 CD\01 current plans\L5.0 Details.dwg 10/28/2026 miranda berger

SCALE: NTS

Model # MS1030-TG-AS

Design Criteria: Structure shall be designed to meet site specific snow and wind load design criteria using most current applicable building codes. All structural members are ASTM A-500 U.S. grade B steel. Welded connection plates shall be ASTM A-36 hot rolled steel. All fabrication performed to latest AISC standards by AWS Certified welders. All framing connections are done using A325 grade bolts within concealed access openings from above and will later be concealed by the roofing. All roof framing shall be flush against the roof decking to eliminate the possibility of bird nesting.

Tubular Steel Columns and Beams: Standard column dimension shall be 5" x 5" x 3/16" tubular steel welded to 5/8" base plates for surface mounting. Main support beams are 7" x 5" x 3/16" and purlins are 6" x 4" x 1/8". Steel sizes are preliminary and are subject to change due to ongoing review and final engineering.

Roof Deck (Optional): 2" x 6" (nominal) #1 Grade, end matched, single tongue and groove with V-joint bottom face, kiln-dried to an average of 15% moisture content, Southern Yellow Pine. #30 roofing felt included.

Roofing: Asphalt Shingles

Frame Finish: All steel framework will receive a corrosion protective TGIC Polyester powder coat, electro-statically applied and cured at 400°F. A large selection of standard colors are available.

Foundation: All columns need to be anchored to concrete footings (footing design provided separately). Columns can be surface mounted to footings with anchor bolts at or below finish slab elevation or they can be embedded directly into the footing without base plates upon request. Anchor bolts and bracing templates are included. Optional base plate covers are available at an additional cost.

Hardware: All structural hardware and roofing fasteners shall be provided.

Warranty: 10 years against manufacturer defects.

Not Included: Concrete work of any kind, unloading of product and installation.

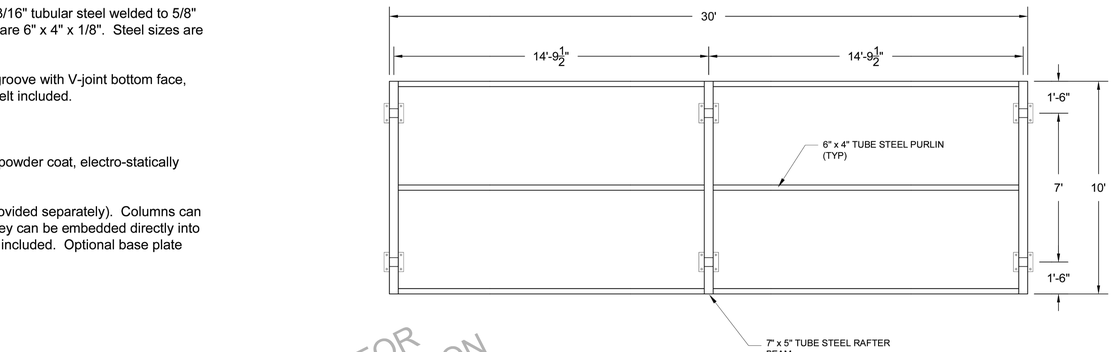

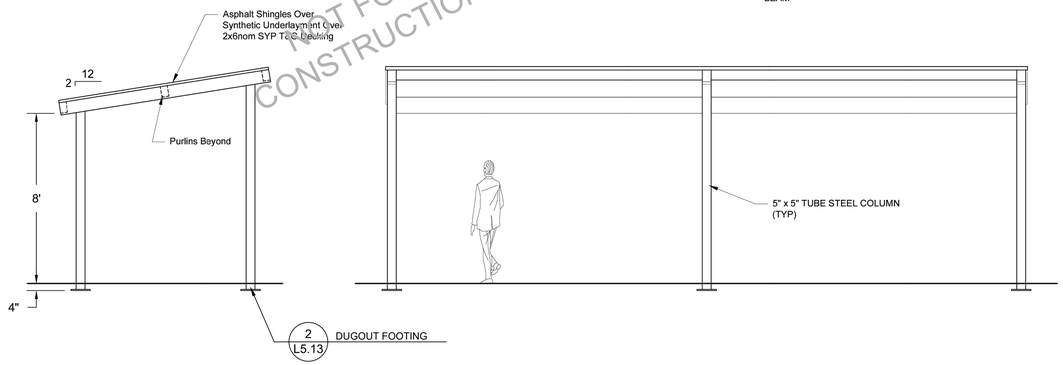

NOT FOR CONSTRUCTION

CFP
CEDAR FOREST PRODUCTS
P.O. BOX 145
WEST OLIVE, MI 49460
800-552-9495
WWW. CEDARFORESTPRODUCTS.COM

PRELIMINARY
NOT FOR CONSTRUCTION

© Copyright 2026 these drawings are the intellectual property of C.F.P. CO. and shall not be copied or disclosed to any unauthorized parties in part or its entirety without our written permission, and they shall not be used for construction unless approved by a C.F.P. Representative.

MODEL NUMBER:	MS1030-TG-AS	SHOWN WITH STANDARD OPTIONS
DESCRIPTION:	10'x30' Monoslope Shelter	
Possible Options:	☐ 29ga METAL ROOF ☐ STANDING SEAM ROOF ☐ CEDAR SHINGLES	☐ METAL BASE SHOES ☐ STEEL COLUMNS ☐ CUSTOM ROOF PITCH	☐ LIGHTNING PROTECTION ☐ 2 TIER ROOF ☐ CUPOLA

REVISION DATES	DRAWN BY:	DATE:
REV:	JES	5-29-26
REV:		
REV:		
REV:		

SHEET: 1 OF 1

1 DUGOUT STRUCTURE
N.T.S.

RVi
22 East Chicago Avenue
Suite 200a
Naperville, IL 60540
Tel: 312.634.2100
www.rviplanning.com

PREPARED FOR
CITY OF LAKE FOREST

800 N. FIELD DRIVE
LAKE FOREST, ILLINOIS 60045

CONSULTANTS

CIVIL ENGINEER
HEY AND ASSOCIATES, INC.
26575 W. COMMERCE DRIVE
SUITE 601
VOLO, ILLINOIS 60073
T 847.740.0888

ELECTRICAL ENGINEER
NOVA ENGINEERING, PC
2338 S. CLINE AVENUE
SCHERERVILLE, INDIANA 46375
T 219.865.3352

SOUTH PARK PHASE TWO

ISSUE FOR BID
150 S. MAYWOOD RD.
LAKE FOREST, ILLINOIS 60045

PROJECT NO:	26000793
DATE:	10/28/2026
DRAWN:	MDB/AMM
REVIEWED:	LJL

OCTOBER 28, 2026
REVISIONS:

NO.	DATE	ISSUE

DETAILS

L5.9

01_ORIGINAL ISSUE

L:\2026\26000793 south park ph2\05 production\03 CD\01 current plans\L5.0 Details.dwg 10/28/2026 mirandi berger

SCALE: NTS

Model#: RHS1616-TG-SHINGLES

Design Criteria: Structure shall be designed to meet site specific snow and wind load design criteria using most current applicable building codes. All structural members are ASTM A-500 U.S. grade B steel. Welded connection plates shall be ASTM A-36 hot rolled steel. All fabrication performed to latest AISC standards by AWS Certified welders. All framing connections are done using A325 grade bolts within concealed access openings from above and will later be concealed by the roofing. All roof framing shall be flush against the roof decking to eliminate the possibility of bird nesting.

Tubular Steel Columns and Beams: Standard column dimension shall be 5" x 5" x 3/16" tubular steel welded to 5/8" base plates for surface mounting. Main support beams are 7" x 5" x 3/16" and purlins are 5" x 3" x 1/8". Steel sizes are preliminary and may change due to ongoing review and final engineering.

Roof Deck: 2" x 6" (nominal) #1 Grade, end matched, single tongue and groove with V-joint bottom face, kiln-dried to an average of 15% moisture content, Southern Yellow Pine.

Roofing: Fiberglass shingles. Standard roof slope is a 4/12 pitch with a eave height of 7'-6". Attached to structural frame with exposed screws painted to match roof color. Matching 24 Ga. trim included.

Frame Finish: All steel framework will receive a corrosion protective TGIC Polyester powder coat, electro-statically applied and cured at 400°F. A large selection of standard colors are available.

Foundation: All columns need to be anchored to concrete footings (footing design provided separately). Columns can be surface mounted to footings with anchor bolts at or below finish slab elevation or they can be embedded directly into the footing without base plates upon request. Anchor bolts and bracing templates are included. Optional base plate covers are available at an additional cost.

Hardware: All structural hardware and roofing fasteners shall be provided.

Warranty: 10 years against manufacturer defects.

Not Included: Concrete work of any kind, unloading of product and installation.

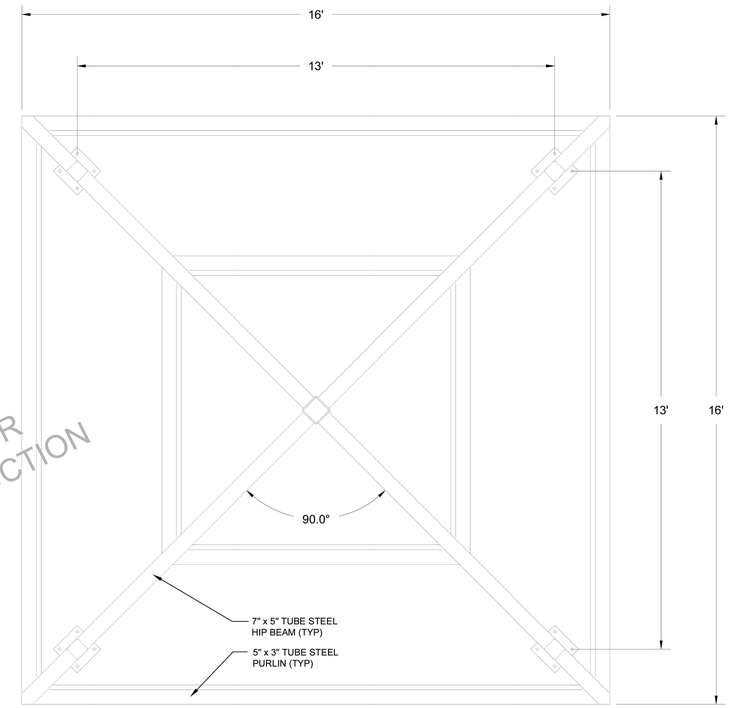

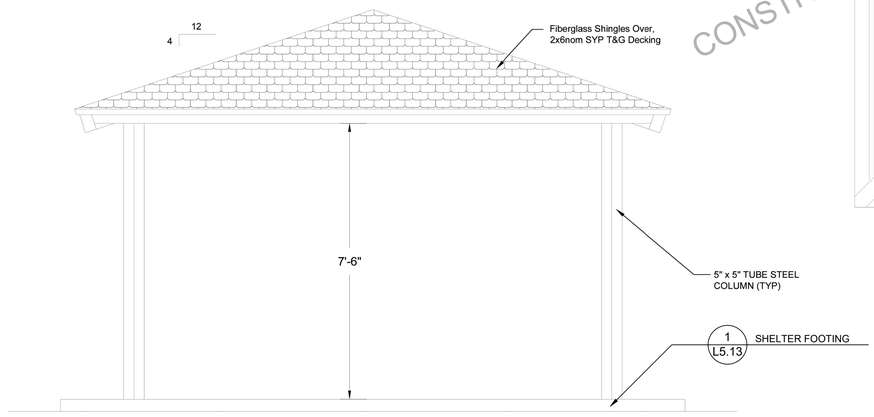

NOT FOR CONSTRUCTION

CFP
CEDAR FOREST PRODUCTS

P.O. BOX 145
WEST OLIVE, MI 49460
800-552-9495
WWW. CEDARFORESTPRODUCTS.COM

PRELIMINARY
NOT FOR CONSTRUCTION

© Copyright 2025 these drawings are the intellectual property of C.F.P. CO. and shall not be copied or disclosed to any unauthorized parties in part or its entirety without our written permission, and they shall not be used for construction unless approved by a C.F.P. Representative.

MODEL NUMBER:	RHS1616	SHOWN WITH STANDARD OPTIONS
DESCRIPTION:	16x16 Rect Hip Shelter	
Possible Options:	☐ 29ga METAL ROOF ☐ STANDING SEAM ROOF ☐ CEDAR SHINGLES	☐ METAL BASE SHOES ☐ STEEL COLUMNS ☐ CUSTOM ROOF PITCH
		☐ LIGHTNING PROTECTION ☐ 2 TIER ROOF ☐ CUPOLA

REVISION DATES	DRAWN BY:	DATE:
REV:	BEW	9-24-25
REV:	SHEET:	
REV:	1 OF 1	
REV:		

1 PICNIC SHELTER
N.T.S.

RVi
22 East Chicago Avenue
Suite 200a
Naperville, IL 60540
Tel: 312.634.2100
www.rviplanning.com

PREPARED FOR
CITY OF LAKE FOREST

800 N. FIELD DRIVE
LAKE FOREST, ILLINOIS 60045

CONSULTANTS

CIVIL ENGINEER
HEY AND ASSOCIATES, INC.
26575 W. COMMERCE DRIVE
SUITE 601
VOLO, ILLINOIS 60073
T 847.740.0888

ELECTRICAL ENGINEER
NOVA ENGINEERING, PC
2338 S. CLINE AVENUE
SCHERERVILLE, INDIANA 46375
T 219.865.3352

SOUTH PARK PHASE TWO

ISSUE FOR BID
150 S. MAYWOOD RD.
LAKE FOREST, ILLINOIS 60045

PROJECT NO:	26000793
DATE:	10/28/2026
DRAWN:	MDB/AMM
REVIEWED:	LJL

OCTOBER 28, 2026
REVISIONS:

NO.	DATE	ISSUE

DETAILS

L5.10

01_ORIGINAL ISSUE

L:\2026\26000793 south park ph2\05 production\03 CD\01 current plans\L5.0 Details.dwg 10/28/2026 miranci berger

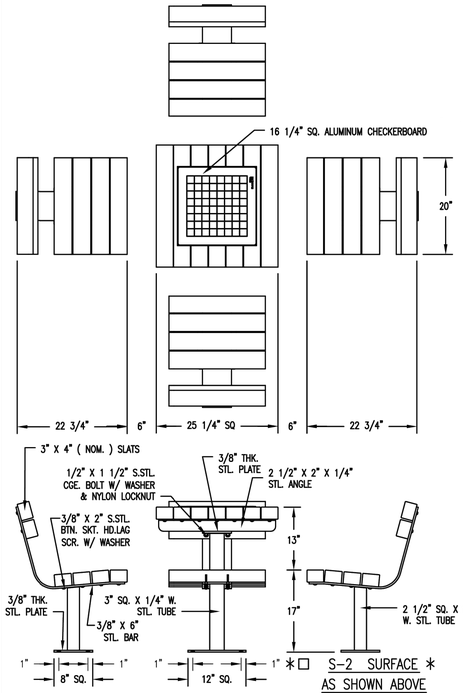

WOOD OPTIONS

- ☐ 'C' & BTR. DOUGLAS FIR KD S4S EE
- ☐ IPE S4S EE
- ☐ OTHER _____

NOTES

1.) ALL STL. MEMBERS COATED W/ ZINC RICH EPOXY THEN FINISHED W/ POLYESTER POWDER COATING.
2.) ALL WOOD MEMBERS TREATED W/ CLEAR PRESERVATIVE.
3.) 1/2" X 3 3/4" EXPANSION ANCHOR BOLTS PROVIDED FOR OPTIONS S-2, AND S-4.
* UPCHARGE APPLIES TO SUPPORT OPTION – CONSULT YOUR LOCAL REPRESENTATIVE.

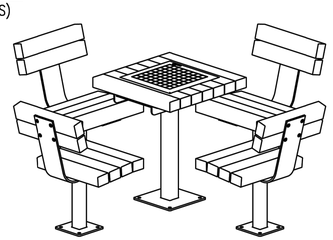

DuMor, inc.
P.O. Box 142 Mifflintown, PA 17059-0142

SCALE :	NONE
DATE DRAWN :	12/10/06
DRAWN BY :	JSB
DATE REV. :	10/27/11
REV. BY :	ESS
TITLE :	GAME TABLE
REV.	F
DRAWING NUMBER	78-34
SHEET	1 OF 2

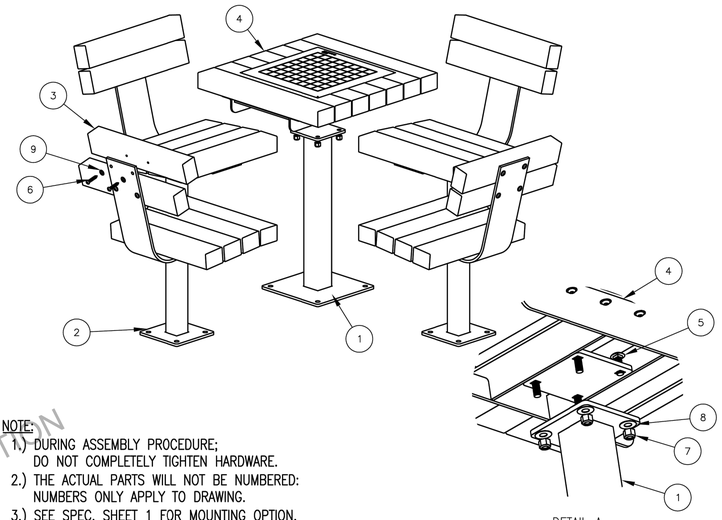

DETAIL A

NOTE:
1.) DURING ASSEMBLY PROCEDURE; DO NOT COMPLETELY TIGHTEN HARDWARE.
2.) THE ACTUAL PARTS WILL NOT BE NUMBERED: NUMBERS ONLY APPLY TO DRAWING.
3.) SEE SPEC. SHEET 1 FOR MOUNTING OPTION.
4.) TABLE TOP SHIPPED FULLY ASSEMBLED.

STEP 1:
USE 4 – PCS. SEAT SUPPORT FOR SURFACE MOUNT (2)
24 – PCS. 3" X 4" X 20" SEAT SLAT (3)
48 – PCS. 3/8" X 2" SS. BTN. SKT. HD. LAG SCR. (6)
48 – PCS. 3/8" SS. FLAT WASHER (9)
ATTACH 3" X 4" X 20" SEAT SLATS (3) TO SEAT SUPPORT FOR SURFACE MOUNT (2) USING HARDWARE (6 & 9). TIGHTEN TO SNUG FIT. REPEAT UNTIL ALL SLATS ARE ATTACHED.

STEP 2:
USE 1 PC. TABLE SUPPORT FOR SURFACE MOUNT (1)
1 PC. TABLE TOP ASSEMBLY W/ CHECKERBOARD (4)
4 PCS. 1/2" X 1 1/2" SS CGE. BOLT (5)
4 PCS. 1/2" SS NYLON LOCK NUT (7)
8 PCS. 1/2" SS FLAT WASHER (8)
ATTACH TABLE TOP ASSEMBLY W/ CHECKERBOARD (4) TO TABLE SUPPORT FOR SURFACE MOUNT (1) USING HARDWARE (5, 7 & 8). TIGHTEN TO SNUG FIT.

STEP 3:
UPON COMPLETION OF SEAT & TABLE ASSEMBLY SQUARE ALL COMPONENTS THEN TIGHTEN ALL HARDWARE.

STEP 4:
MOUNT AND ANCHOR AS SPECIFIED.

ITEM	QTY	PART NO	DESCRIPTION
1	1	0-78-00-01/S-2	TABLE SUPPORT FOR SURFACE MOUNT
2	4	0-78-00-02/S-2	SEAT SUPPORT FOR SURFACE MOUNT
3	24	0-78-00-04	3" X 4" X 20" SEAT SLAT
4	1	0-78-30	TABLE TOP ASSEMBLY W/ CKRBD
5	4	1-11-042	1/2" X 1 1/2" SS CGE BOLT
6	48	1-13-016	3/8" X 2" SS BTN SKT HD LAG SCR
7	4	1-20-015	1/2" SS NYLON LOCKNUT
8	4	1-22-015	1/2" SS FLAT WASHER
9	48	1-22-024	3/8" SS FLAT WASHER

DuMor, inc.
P.O. Box 142 Mifflintown, PA 17059-0142

SCALE :	NONE
DATE DRAWN :	12/10/06
DRAWN BY :	JSB
DATE REV. :	03/30/11
REV. BY :	ESS
TITLE :	GAME TABLE ASSEMBLY
REV.	E
DRAWING NUMBER	78-34
SHEET	2 OF 2

NOT FOR CONSTRUCTION

1 GAME TABLES - INSTALLED BY OWNER
N.T.S.

RVi
22 East Chicago Avenue
Suite 200a
Naperville, IL 60540
Tel: 312.634.2100
www.rviplanning.com

PREPARED FOR
CITY OF LAKE FOREST

800 N. FIELD DRIVE
LAKE FOREST, ILLINOIS 60045

CONSULTANTS

CIVIL ENGINEER
HEY AND ASSOCIATES, INC.
26575 W. COMMERCE DRIVE
SUITE 601
VOLO, ILLINOIS 60073
T 847.740.0888

ELECTRICAL ENGINEER
NOVA ENGINEERING, PC
2338 S. CLINE AVENUE
SCHERERVILLE, INDIANA 46375
T 219.865.3352

SOUTH PARK PHASE TWO

ISSUE FOR BID
150 S. MAYWOOD RD.
LAKE FOREST, ILLINOIS 60045

PROJECT NO:	26000793
DATE:	10/28/2026
DRAWN:	MDB/AMM
REVIEWED:	LJL

OCTOBER 28, 2026
REVISIONS:

NO.	DATE	ISSUE

DETAILS

L5.11

01_ORIGINAL ISSUE

L:\2026\26000793 south park ph2\05 production\03 CD\01 current plans\L5 0 Details.dwg 10/29/2026 mirand berger

ASTM F1487

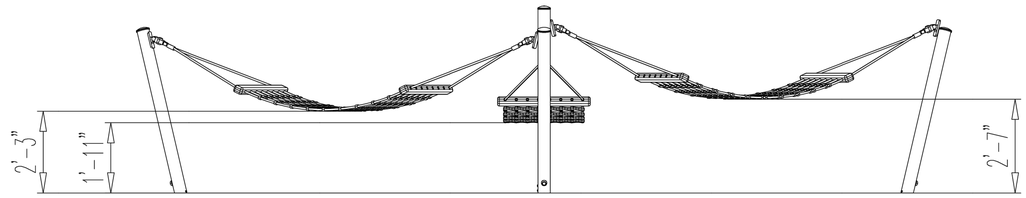

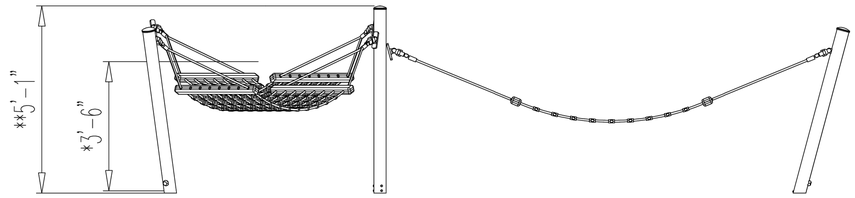

Binding approval for Variant Design
When pressing "Prepare to order" in CRM all purchases are subject to this design. This design is defined under its own KOMPAN identification number, which is stated in upper right corner. All constructional details, dimensions, materials, colours and specifications shown on attached datasheets (plan, side, perspective view + safety zone) are hereby accepted when placing the order. Changes are no longer possible.

Notwithstanding the aforementioned and without changing the overall design, Variant Team may in the construction phase, without obtaining approval, perform smaller modifications when deemed beneficial or necessary for the construction. All other modifications are subject to prior approval.

KOMPAN Let's play

NOT FOR CONSTRUCTION

PCMP-CUSTOM

712884

Variant of: PCM805-1002
Footings: 100 cm

EN:
Perimeter: 34 m
Area: 58.8 m2

ASTM:
Perimeter: 109.2 ft
Area: 624.9 ft2

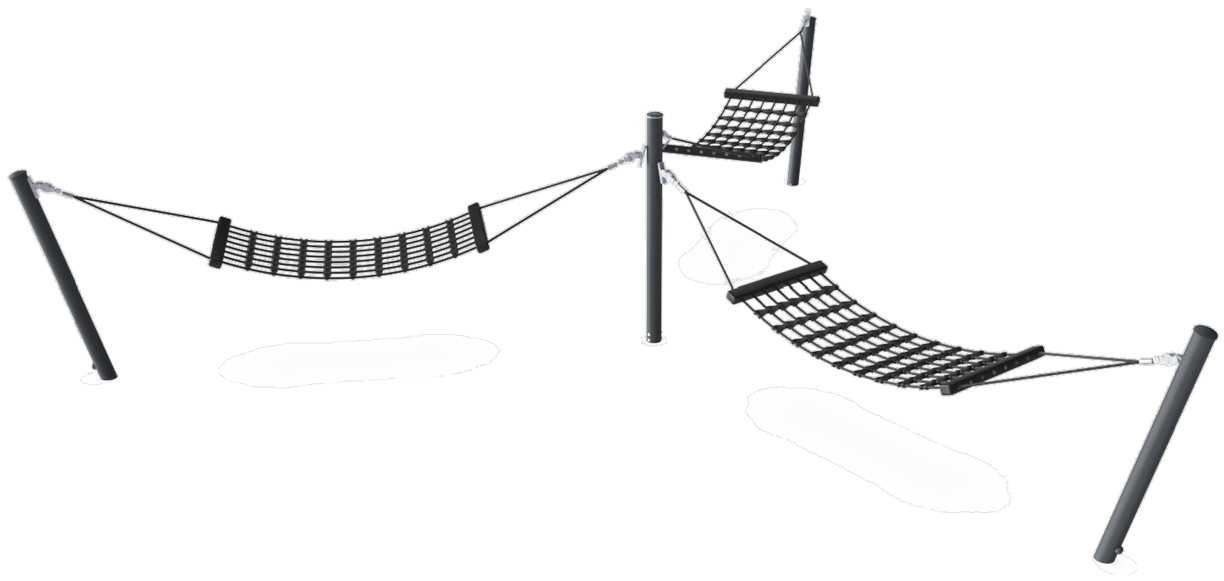

1 HAMMOCKS
N.T.S.

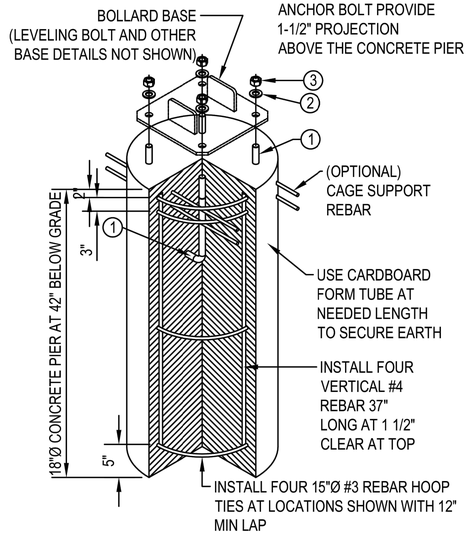

CPAS12 COLLASPIBLE POST
ANCHOR SYSTEM ASSEMBLY

LEGEND:
1 Ø3/4" x 12" TYPE L ANCHOR BOLT-H.D.G.
2 Ø3/4" TYPE A FLAT NARROW WASHER GALVANIZED STEEL
3 Ø3/4" HEX NUT GALVANIZED STEEL

2 COLLAPSIBLE BOLLARD FOOTING AND ANCHOR
N.T.S.

RVi
22 East Chicago Avenue
Suite 200a
Naperville, IL 60540
Tel: 312.634.2100
www.rviplanning.com

PREPARED FOR
CITY OF LAKE FOREST

800 N. FIELD DRIVE
LAKE FOREST, ILLINOIS 60045

CONSULTANTS

CIVIL ENGINEER
HEY AND ASSOCIATES, INC.
26575 W. COMMERCE DRIVE
SUITE 601
VOLO, ILLINOIS 60073
T 847.740.0888

ELECTRICAL ENGINEER
NOVA ENGINEERING, PC
2338 S. CLINE AVENUE
SCHERERVILLE, INDIANA 46375
T 219.865.3352

SOUTH PARK PHASE TWO

ISSUE FOR BID
150 S. MAYWOOD RD.
LAKE FOREST, ILLINOIS 60045

PROJECT NO:	26000793
DATE:	10/28/2026
DRAWN:	MDB/AMM
REVIEWED:	LJL

OCTOBER 28, 2026
REVISIONS:

NO.	DATE	ISSUE

DETAILS

L5.12

01_ORIGINAL ISSUE

L:\2026\26000793 south park ph2\05 production\03 CD\01 current plans\L5.0 Details.dwg 10/28/2026 mirandi berger

Standard Size Preliminary Footing

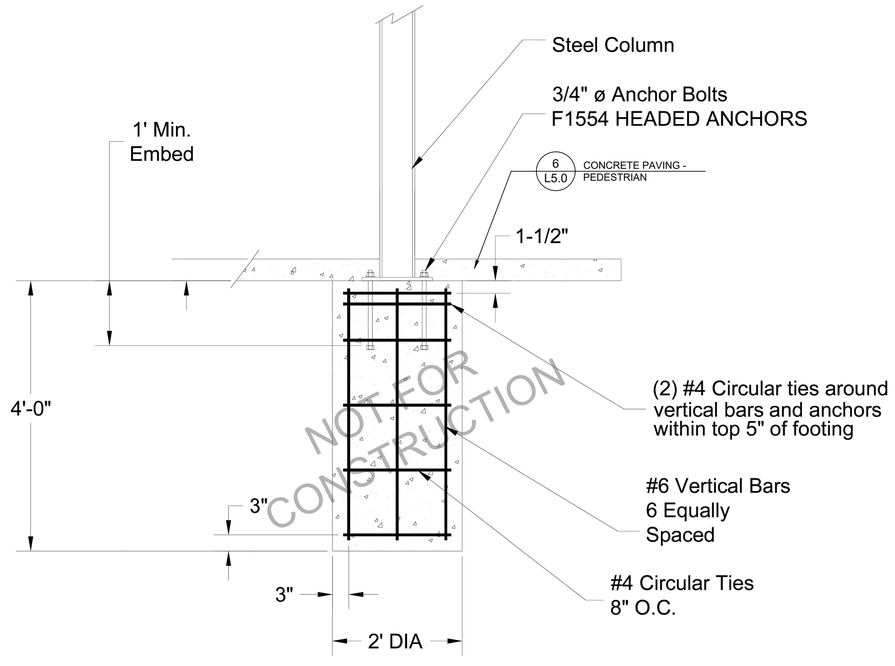

Column/Footing Detail

2 DUGOUT FOOTING
N.T.S.

Larger Size Preliminary Footing

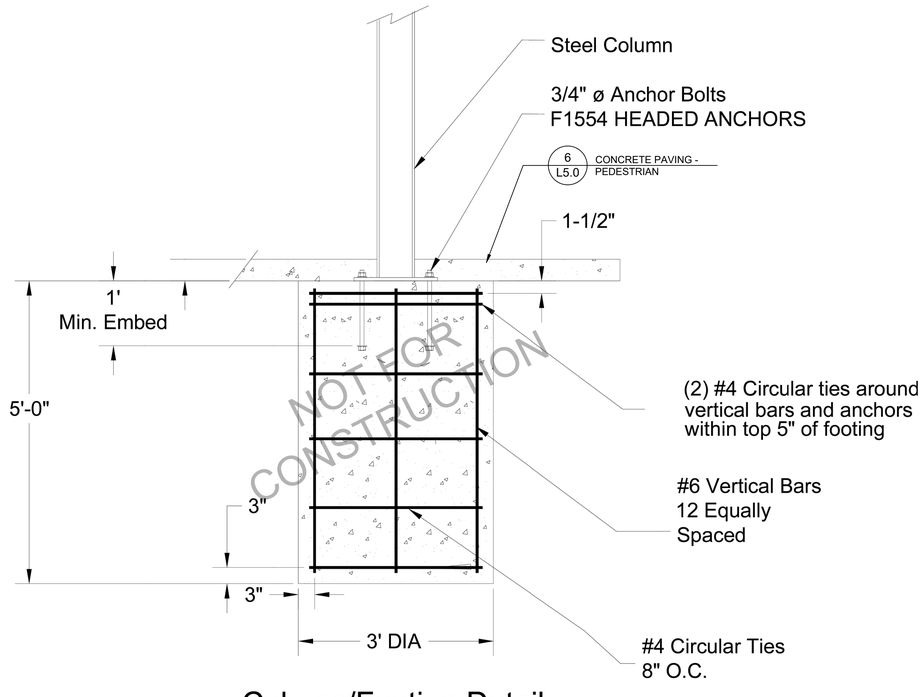

Column/Footing Detail

1 SHELTER FOOTING
N.T.S.

RVi
22 East Chicago Avenue
Suite 200a
Naperville, IL 60540
Tel: 312.634.2100
www.rviplanning.com

PREPARED FOR
CITY OF LAKE FOREST

800 N. FIELD DRIVE
LAKE FOREST, ILLINOIS 60045

CONSULTANTS

CIVIL ENGINEER
HEY AND ASSOCIATES, INC.
26575 W. COMMERCE DRIVE
SUITE 601
VOLO, ILLINOIS 60073
T 847.740.0888

ELECTRICAL ENGINEER
NOVA ENGINEERING, PC
2338 S. CLINE AVENUE
SCHERERVILLE, INDIANA 46375
T 219.865.3352

SOUTH PARK PHASE TWO

ISSUE FOR BID
150 S. MAYWOOD RD.
LAKE FOREST, ILLINOIS 60045

PROJECT NO:	26000793
DATE:	10/28/2026
DRAWN:	MDB/AMM
REVIEWED:	LJL

OCTOBER 28, 2026
REVISIONS:

NO.	DATE	ISSUE

DETAILS

L5.13

01_ORIGINAL ISSUE

L:\2026\26000793 south park ph2\05 production\03 CD\01 current plans\L5.0 Details.dwg 10/28/2026 miranda berger

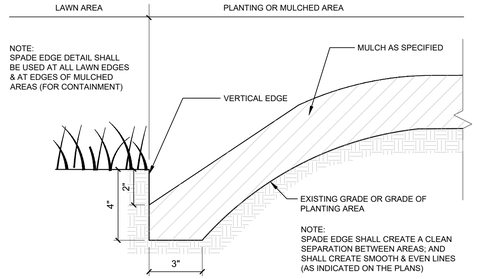

4 SPADE EDGE

3" = 1'-0"

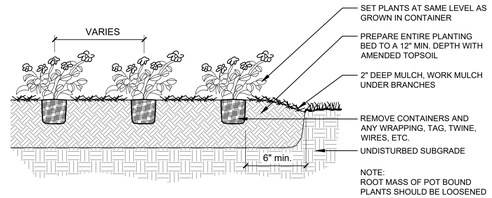

5 PERENNIAL PLANTING

1/2" = 1'-0"

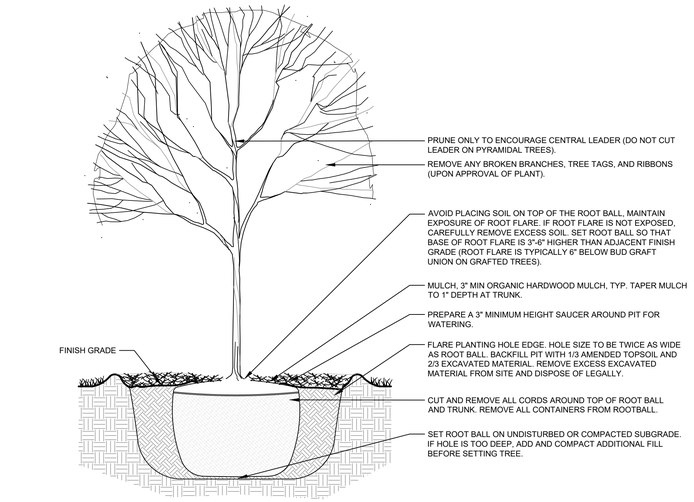

1 SHADE TREE - NO TP

1/2" = 1'-0"

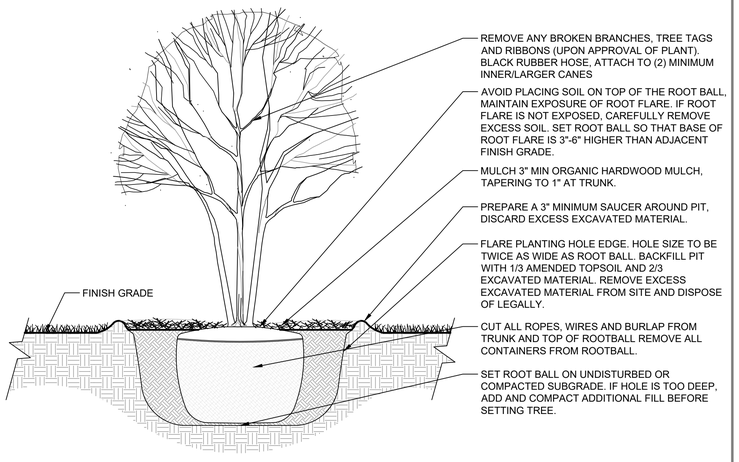

2 ORNAMENTAL TREE PLANTING

1/2" = 1'-0"

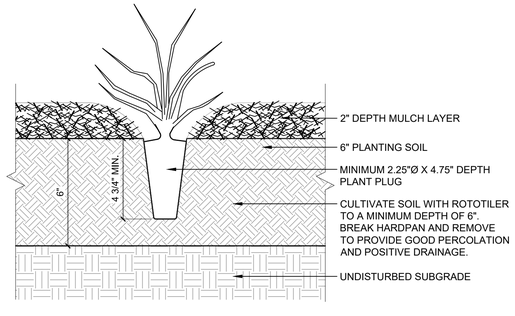

7 PLUG PLANTING

3" = 1'-0"

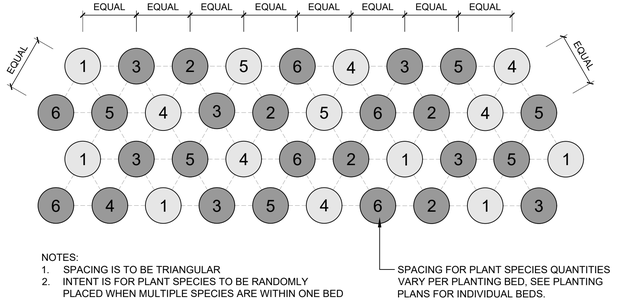

6 PLANT SPACING

1/2" = 1'-0"

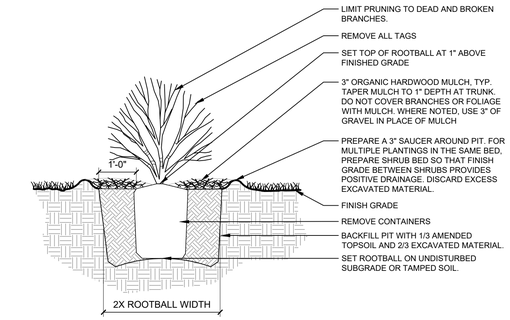

3 SHRUB DETAIL

1/2" = 1'-0"

RVi
22 East Chicago Avenue
Suite 200a
Naperville, IL 60540
Tel: 312.634.2100
www.rviplanning.com

PREPARED FOR

CITY OF LAKE FOREST

800 N. FIELD DRIVE
LAKE FOREST, ILLINOIS 60045

CONSULTANTS

CIVIL ENGINEER
HEY AND ASSOCIATES, INC.
26575 W. COMMERCE DRIVE
SUITE 601
VOLO, ILLINOIS 60073
T 847.740.0888

ELECTRICAL ENGINEER
NOVA ENGINEERING, PC
2338 S. CLINE AVENUE
SCHERERVILLE, INDIANA 46375
T 219.865.3352

SOUTH PARK PHASE TWO

ISSUE FOR BID
150 S. MAYWOOD RD.
LAKE FOREST, ILLINOIS 60045

PROJECT NO:	26000793
DATE:	10/28/2026
DRAWN:	MDB/AMM
REVIEWED:	LJL

OCTOBER 28, 2026
REVISIONS:

NO.	DATE	ISSUE

DETAILS

L5.14

01_ORIGINAL ISSUE

L:\2026\26000793 south park ph2\05 production\03 CD\01 current plans\L5.0 Details.dwg 10/28/2026 miranci berger

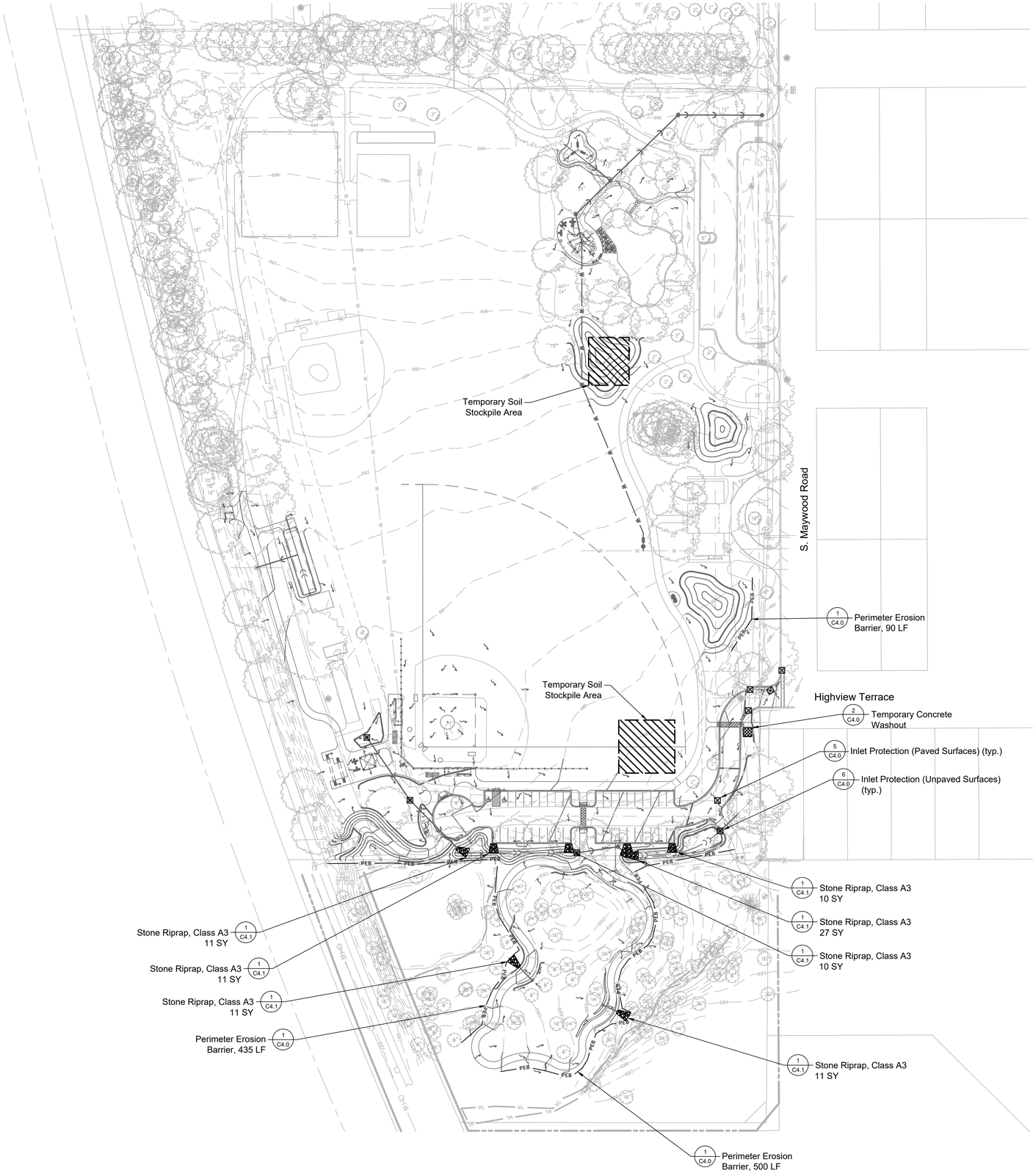

SOIL EROSION AND SEDIMENT CONTROL NOTES

All soil erosion and sedimentation control measures shall be in accordance with the "Standard Specifications for Road and Bridge Construction", State of Illinois, Department of Transportation, adopted January 1, 2022. Unless otherwise indicated, all vegetative and structural erosion and sediment control practices will be constructed according to minimum standards and specifications in the Illinois Urban Manual revised June 2013.

1. Following are the Lake County Stormwater Management Commission's Soil Erosion and Sediment Control Construction Notes:

   A. Sediment control measures shall be installed prior to the commencement of hyrdologic disturbance of upland areas.

   B. For those developments that require a Designated Erosion Control Inspector (DECI), inspections and documentation shall be performed, at a minimum:
   - Upon completion of sediment and runoff control measures (including perimeter controls and diversions), prior to proceeding with any other earth disturbance or grading.
   - After every seven (7) calendar days or storm event with greater than 0.5 inch of rainfall or liquid equivalent precipitation.

   C. Soil disturbance shall be conducted in such a manner as to minimize erosion. If stripping, clearing, grading, or landscaping are to be done in phases, the permittee shall plan for appropriate soil erosion and sediment control measures.

   D. The existing parking lot entrance on S. Maywood Road shall be utilized for construction access. Should the existing entrance not be sufficient to prevent tracking onto adjacent roadways, a stabilized mat of crushed stone meeting IDOT gradation CA-1 underlain with filter fabric, and in accordance with the Illinois Urban Manual, or other appropriate measures(s) as approved by the Enforcement Officer, shall be installed. Sediment or soil is not alllowed on the adjacent pavement and shall be removed by scraping or street cleaning and transported to a controlled sediment disposal area.

   E. Temporary diversions shall be constructed as necessary to direct all runoff from hydrologically disturbed areas to an appropriate sediment trap or basin.

   F. Disturbed areas shall be stabilized with temporary or permanent measures within seven (7) calendar days following the end of active hydrologic disturbance or redisturbance.

   G. All stockpiles shall have appropriate measures to prevent erosion. Stockpiles shall not be placed in flood prone areas or wetlands and designated buffers.

   H. Slopes steeper than 3H:1V shall be stabilized with appropriate measures as approved by the Enforcement Officer.

   I. Appropriate erosion control blanket shall be installed on all interior detention basin side slopes between the normal water level and high water level.

   J. Storm sewers that are or will be functioning during construction shall be protected by an appropriate sediment control measure.

   K. If dewatering services are used, adjoining properties and discharge locations shall be protected from erosion and sedimentation. Discharges shall be routed through an approved anionic polymer dewatering system or a similar measure as approved by the Enforcement Officer. Dewatering systems should be inspected daily during operational periods. The Enforcement Officer, or approved representative, must be present at the commencement of dewatering activities.

   L. If installed soil erosion and sediment control measures do not minimize sediment leaving the development site, additional measures such as anionic polymers or filtration systems may be required by the Enforcement Officer.

   M. All temporary and permanent erosion control measures must be maintained and repaired as needed. The property owner shall be ultimately responsible for maintenance and repair.

   N. All temporary sediment control measures shall be removed within 30 days after final site stabilization is achieved or after the temporary measures are no longer needed.

   O. The erosion control measures indicated on the plans are the minimum requirements. Additional measures may be required, as directed by the Engineer, Enforcement Officer, or other governing agency.

2. Quantities are for convenience of the Owner. Contractor shall install SESC measures as shown on the plan.

SESC LEGEND

- WL — Ex Wetland Boundary
- Ex Major Contour (5 foot)
- Ex Minor Contour (1 foot)
- 680 — Prop Major Contour (5 foot)
- 679 — Prop Minor Contour (1 foot)
- PEB — Perimeter Erosion Barrier
- Inlet Protection

0 30' 60' 120'
SCALE: 1" = 60'-0"

RVi
22 East Chicago Avenue
Suite 200a
Naperville, IL 60540
Tel: 312.634.2100
www.rvilanning.com

PREPARED FOR
CITY OF LAKE FOREST

800 N. FIELD DRIVE
LAKE FOREST, ILLINOIS 60045

CONSULTANTS

CIVIL ENGINEER
HEY AND ASSOCIATES, INC.
26575 W. COMMERCE DRIVE
SUITE 601
VOLO, ILLINOIS 60073
T 847.740.0888

ELECTRICAL ENGINEER
NOVA ENGINEERING, PC
2338 S. CLINE AVENUE
SCHERERVILLE, INDIANA 46375
T 219.865.3352

SOUTH PARK PHASE TWO

ISSUE FOR BID
150 S. MAYWOOD RD.
LAKE FOREST, ILLINOIS 60045

PROJECT NO:	26000793
DATE:	10/28/2026
DRAWN:	BCB/BEG
REVIEWED:	CTM

OCTOBER 28, 2026
REVISIONS:

NO.	DATE	ISSUE

SESC PLAN

C1.0

01_ORIGINAL ISSUE

E:\Projects\26-0075 RVI - South Park Improvements\05 CAD\26-0075 RVI South Park.dwg 10/27/2026 corey mase



GRADING LEGEND

- Ex Wetland Boundary
- Ex Major Contour (5 foot)
- Ex Minor Contour (1 foot)
- 680 Prop Major Contour (5 foot)
- 679 Prop Minor Contour (1 foot)
- Prop Storm Sewer
- Prop Storm Underdrain
- 675.50 Spot Elevation
- 675.50 T/C Top of Curb Spot Elevation
- ±M.E. Match Existing
- Drainage Arrow
- Prop Cleanout
- Prop Catch Basin
- Prop Storm Manhole
- Prop Flared End Section

GRADING AND DRAINAGE NOTES

All work done under this heading will be done in accordance with applicable provisions of the "Standard Specifications for Road and Bridge Construction", State of Illinois, Department of Transportation, adopted January 1, 2026, and revisions thereto, the "Standard Specifications for Water and Sewer Construction in Illinois", latest edition, the City of Lake Forest codes and regulations, the project notes and specifications.

1. Work under this section shall include, but not be limited to, the following:
   a. Clearing and removal of all undesirable vegetative growth within the construction area except as noted otherwise on the plans.
   b. Removing unsuitable materials as specified from paved and playground areas and other designated areas.
   c. Clay cut and clay fill with compaction within paved and playground areas and other designated areas.
   d. Excavation and grading of the entire site per plan, including construction of berms, swales, etc., as shown on these plans.
   e. Placement and construction of structural and non-structural fills.
   f. If required, removal from site and disposal of any excess or unsuitable material upon completion of mass grading.
   g. Movement and compaction of spoil material from the construction of underground utilities.
   h. Final shaping and trimming to the lines, grades and cross-sections shown in these plans, and topsoil placement to design finish grade elevations.
   i. Soil erosion control measures in accordance with the applicable specifications and county requirements.
2. Silt fence and perimeter erosion barrier as shown in the construction plans shall be erected prior to mass earthwork.
3. It is the Contractor's responsibility to determine all material quantities and apprise themself of all site conditions. No claims for extra work will be recognized unless ordered in writing by the Owner.
4. The grading operations are to be closely supervised and inspected, particularly during the removal of unsuitable material and the construction of embankments, by the geotechnical engineer or his representative. All testing, inspection and supervision of soil quality, unsuitable removal and its replacement, and other soils related operations shall be entirely the responsibility of the geotechnical engineer.
5. The grading and construction of the site improvements shall not cause ponding of stormwater except as noted on the plans. All areas adjacent to these improvements shall be graded to allow positive drainage.
6. The proposed grading elevations shown on the plans are finish grade unless otherwise noted. A minimum of six inches (6") of topsoil is to be placed before finish grade elevations are achieved, except where noted otherwise. Topsoil depth shall be increased as needed if on-site earth fill is not available and for construction of berms.
7. It is anticipated that topsoil and earth cuts and fills will balance on-site with no import or export needed. The Contractor shall notify the Owner and/or Engineer should it be determined prior to or during construction that the earthwork will not balance.
8. All disturbed areas to be restored according to the planting plan.
9. All disturbed areas shall be stabilized with NA Green S75 erosion control blanket, or approved equal, unless otherwise noted.
10. The Contractor is to locate all utilities, public and private, prior to beginning construction. Contractor will be responsible for any damages to utilities caused by their work. Contact J.U.L.I.E. 72 hours prior to construction at 1-800-982-0123 or (811) for location of utilities and contractor shall be responsible for protection of the same.
11. The Contractor shall notify the Architect or Engineer if existing utility lines of any nature are encountered that conflict in location with new construction so that the conflict may be resolved.
12. The Contractor shall be responsible for the protection of all public and private utilities even though they may not be shown on the plans. Any utility damaged during construction shall be repaired or replaced to the satisfaction of the Owner and the Contractor's expense.
13. The Contractor shall be required to make arrangements for the proper bracing, shoring and other required protection of all roadways, structures, poles, cables and pipe lines before construction begins. He shall be responsible for any damage to the streets or roadways and associated structures and shall make repairs as necessary to the satisfaction of the Owner at his own expense.
14. The Contractor shall confirm the location (horizontal and vertical) of all utility pipes and structures to which a new connection is being made prior to constructing the new pipe. He shall notify the Architect or Engineer should any discrepancy be found between the location shown on the plans and the location determined in the field.

0 10' 20' 40'
SCALE: 1" = 20'-0"

RVi
22 East Chicago Avenue
Suite 200a
Naperville, IL 60540
Tel: 312.634.2100
www.rviplanning.com

PREPARED FOR
CITY OF LAKE FOREST

800 N. FIELD DRIVE
LAKE FOREST, ILLINOIS 60045

CONSULTANTS

CIVIL ENGINEER
HEY AND ASSOCIATES, INC.
26575 W. COMMERCE DRIVE
SUITE 601
VOLO, ILLINOIS 60073
T 847.740.0888

ELECTRICAL ENGINEER
NOVA ENGINEERING, PC
2338 S. CLINE AVENUE
SCHERERVILLE, INDIANA 46375
T 219.865.3352

SOUTH PARK PHASE TWO

ISSUE FOR BID
150 S. MAYWOOD RD.
LAKE FOREST, ILLINOIS 60045

PROJECT NO:	26000793
DATE:	10/28/2026
DRAWN:	BCB/BEG
REVIEWED:	CTM

OCTOBER 28, 2026
REVISIONS:

NO.	DATE	ISSUE

GRADING AND DRAINAGE PLAN OVERALL

C2.0

01_ORIGINAL ISSUE

E:\Projects\26-0075 RVI - South Park Improvements\05 CAD\26-0075 RVI South Park.dwg 10/27/2026 corey mase

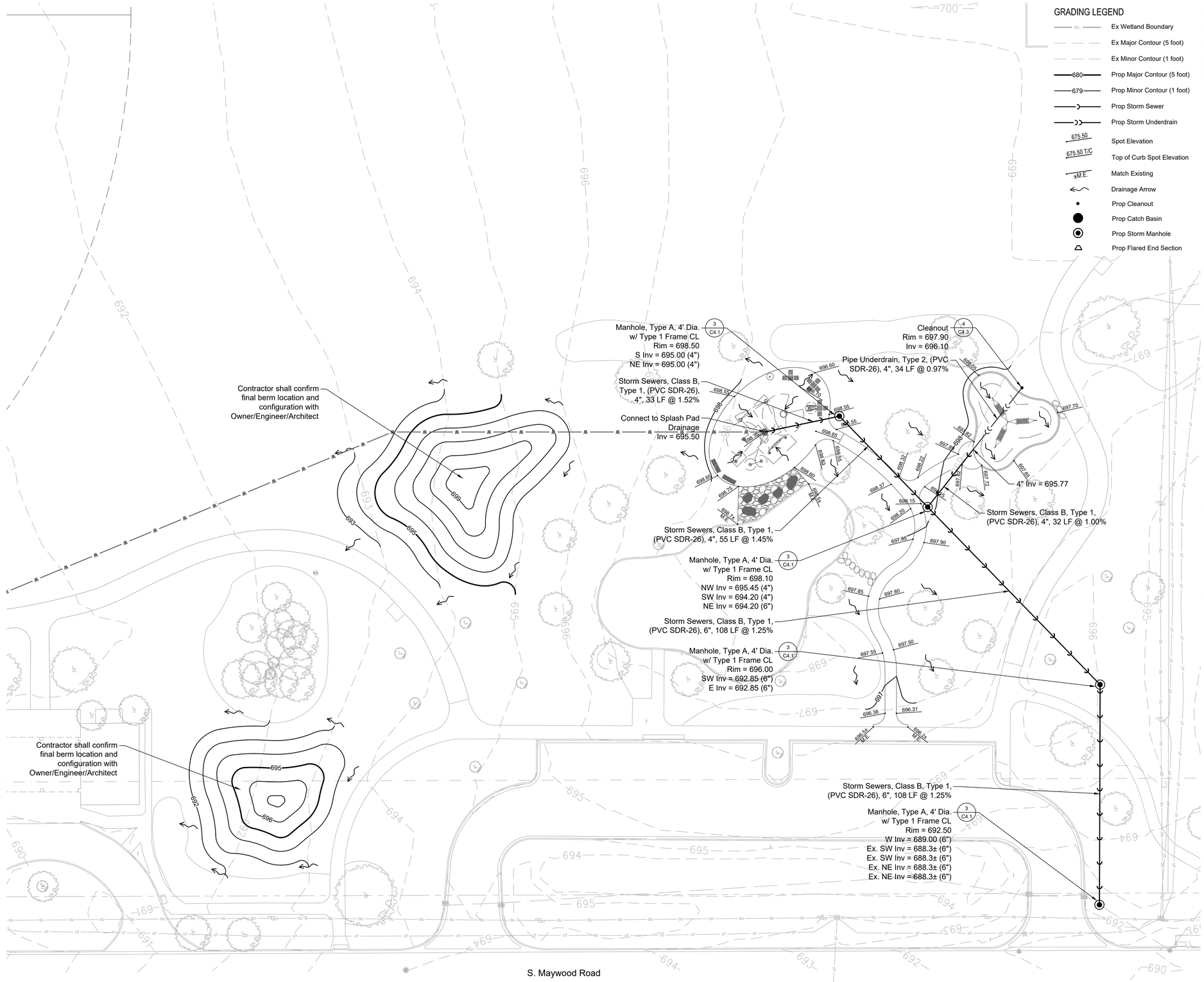

GRADING LEGEND

- Ex Wetland Boundary
- Ex Major Contour (5 foot)
- Ex Minor Contour (1 foot)
- Prop Major Contour (5 foot)
- Prop Minor Contour (1 foot)
- Prop Storm Sewer
- Prop Storm Underdrain
- Spot Elevation
- Top of Curb Spot Elevation
- Match Existing
- Drainage Arrow
- Prop Cleanout
- Prop Catch Basin
- Prop Storm Manhole
- Prop Flared End Section

GRADING AND DRAINAGE NOTES

All work done under this heading will be done in accordance with applicable provisions of the "Standard Specifications for Road and Bridge Construction", State of Illinois, Department of Transportation, adopted January 1, 2026, and revisions thereto, the "Standard Specifications for Water and Sewer Construction in Illinois", latest edition, the City of Lake Forest codes and regulations, the project notes and specifications.

1. Work under this section shall include, but not be limited to, the following:
   a. Clearing and removal of all undesirable vegetative growth within the construction area except as noted otherwise on the plans.
   b. Removing unsuitable materials as specified from paved and playground areas and other designated areas.
   c. Clay cut and clay fill with compaction within paved and playground areas and other designated areas.
   d. Excavation and grading of the entire site per plan, including construction of berms, swales, etc., as shown on these plans.
   e. Placement and construction of structural and non-structural fills.
   f. If required, removal from site and disposal of any excess or unsuitable material upon completion of mass grading.
   g. Movement and compaction of spoil material from the construction of underground utilities.
   h. Final shaping and trimming to the lines, grades and cross-sections shown in these plans, and topsoil placement to design finish grade elevations.
   i. Soil erosion control measures in accordance with the applicable specifications and county requirements.
2. Silt fence and perimeter erosion barrier as shown in the construction plans shall be erected prior to mass earthwork.
3. It is the Contractor's responsibility to determine all material quantities and apprise themself of all site conditions. No claims for extra work will be recognized unless ordered in writing by the Owner.
4. The grading operations are to be closely supervised and inspected, particularly during the removal of unsuitable material and the construction of embankments, by the geotechnical engineer or his representative. All testing, inspection and supervision of soil quality, unsuitable removal and its replacement, and other soils related operations shall be entirely the responsibility of the geotechnical engineer.
5. The grading and construction of the site improvements shall not cause ponding of stormwater except as noted on the plans. All areas adjacent to these improvements shall be graded to allow positive drainage.
6. The proposed grading elevations shown on the plans are finish grade unless otherwise noted. A minimum of six inches (6") of topsoil is to be placed before finish grade elevations are achieved, except where noted otherwise. Topsoil depth shall be increased as needed if on-site earth fill is not available and for construction of berms.
7. It is anticipated that topsoil and earth cuts and fills will balance on-site with no import or export needed. The Contractor shall notify the Owner and/or Engineer should it be determined prior to or during construction that the earthwork will not balance.
8. All disturbed areas to be restored according to the planting plan.
9. All disturbed areas shall be stabilized with NA Green S75 erosion control blanket, or approved equal, unless otherwise noted.
10. The Contractor is to locate all utilities, public and private, prior to beginning construction. Contractor will be responsible for any damages to utilities caused by their work. Contact J.U.L.I.E. 72 hours prior to construction at 1-800-982-0123 or (811) for location of utilities and contractor shall be responsible for protection of the same.
11. The Contractor shall notify the Architect or Engineer if existing utility lines of any nature are encountered that conflict in location with new construction so that the conflict may be resolved.
12. The Contractor shall be responsible for the protection of all public and private utilities even though they may not be shown on the plans. Any utility damaged during construction shall be repaired or replaced to the satisfaction of the Owner and the Contractor's expense.
13. The Contractor shall be required to make arrangements for the proper bracing, shoring and other required protection of all roadways, structures, poles, cables and pipe lines before construction begins. He shall be responsible for any damage to the streets or roadways and associated structures and shall make repairs as necessary to the satisfaction of the Owner at his own expense.
14. The Contractor shall confirm the location (horizontal and vertical) of all utility pipes and structures to which a new connection is being made prior to constructing the new pipe. He shall notify the Architect or Engineer should any discrepancy be found between the location shown on the plans and the location determined in the field.

RVi
22 East Chicago Avenue
Suite 200a
Naperville, IL 60540
Tel: 312.634.2100
www.rviplanning.com

PREPARED FOR

CITY OF LAKE FOREST

800 N. FIELD DRIVE
LAKE FOREST, ILLINOIS 60045

CONSULTANTS

CIVIL ENGINEER
HEY AND ASSOCIATES, INC.
26575 W. COMMERCE DRIVE
SUITE 601
VOLO, ILLINOIS 60073
T 847.740.0888

ELECTRICAL ENGINEER
NOVA ENGINEERING, PC
2338 S. CLINE AVENUE
SCHERERVILLE, INDIANA 46375
T 219.865.3352

SOUTH PARK PHASE TWO

ISSUE FOR BID
150 S. MAYWOOD RD.
LAKE FOREST, ILLINOIS 60045

PROJECT NO:	26000793
DATE:	10/28/2026
DRAWN:	BCB/BEG
REVIEWED:	CTM

OCTOBER 28, 2026
REVISIONS:

NO.	DATE	ISSUE

GRADING AND DRAINAGE PLAN ENLARGEMENT

C2.1

01_ORIGINAL ISSUE

E:\Projects\26-0075 RVI - South Park Improvements\05 CAD\26-0075 RVI South Park.dwg 10/27/2026 corey mase

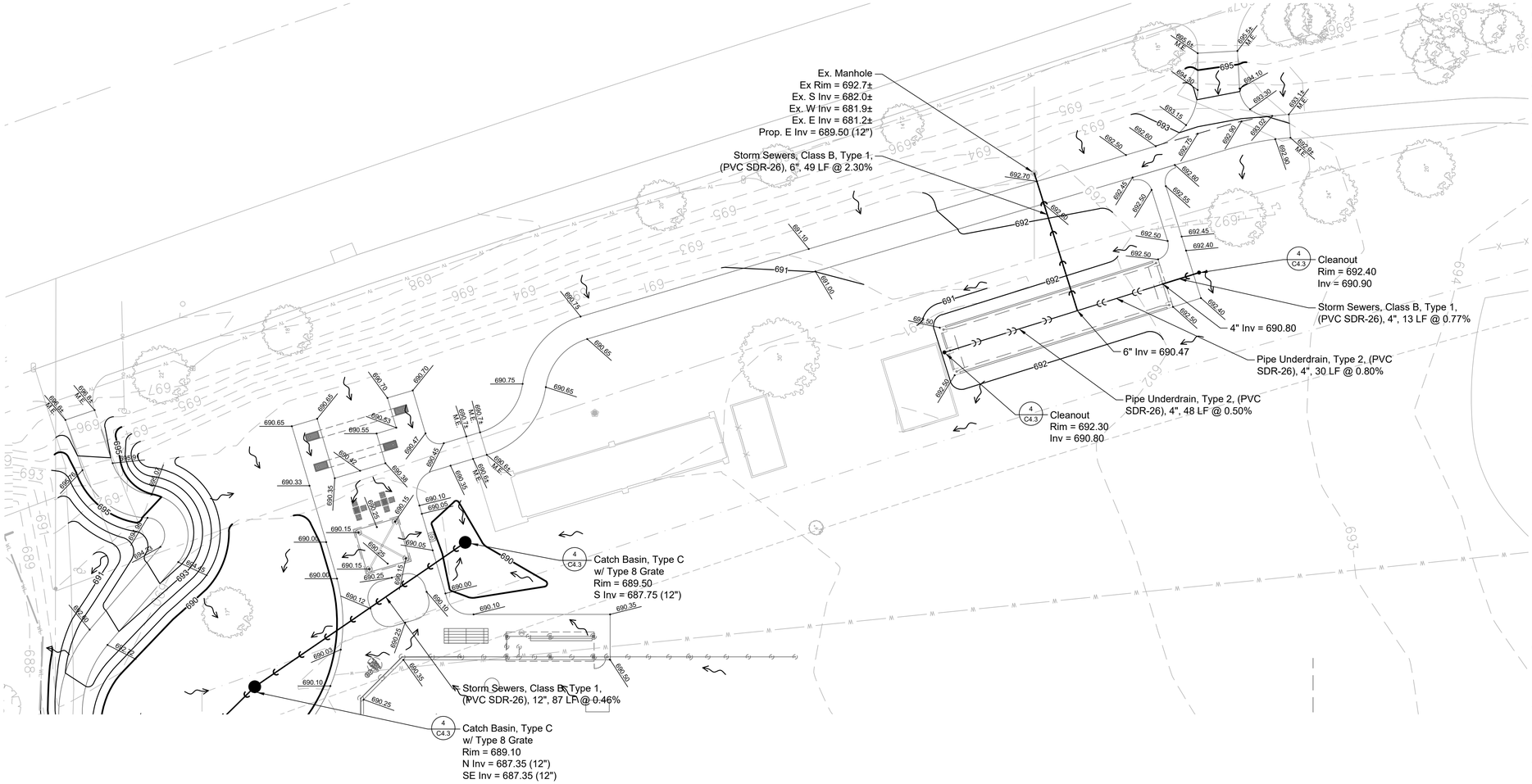

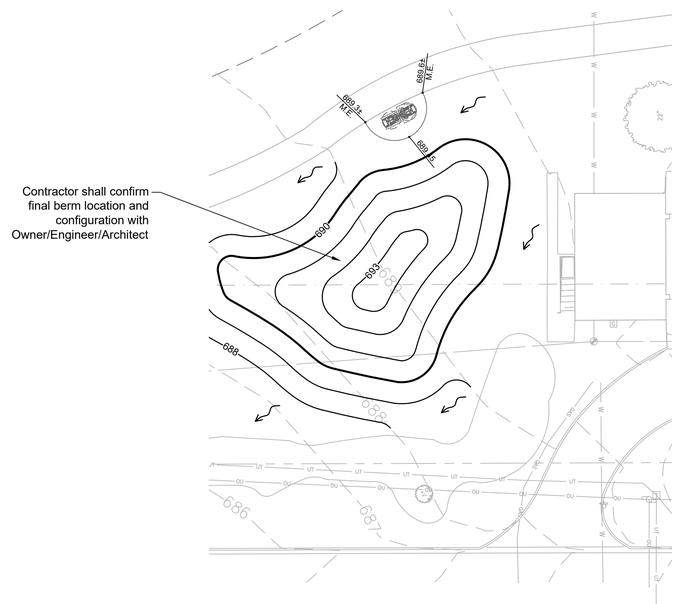

GRADING LEGEND

- Ex Wetland Boundary
- Ex Major Contour (5 foot)
- Ex Minor Contour (1 foot)
- Prop Major Contour (5 foot)
- Prop Minor Contour (1 foot)
- Prop Storm Sewer
- Prop Storm Underdrain
- Spot Elevation
- Top of Curb Spot Elevation
- Match Existing
- Drainage Arrow
- Prop Cleanout
- Prop Catch Basin
- Prop Storm Manhole
- Prop Flared End Section

GRADING AND DRAINAGE NOTES

All work done under this heading will be done in accordance with applicable provisions of the "Standard Specifications for Road and Bridge Construction", State of Illinois, Department of Transportation, adopted January 1, 2026, and revisions thereto, the "Standard Specifications for Water and Sewer Construction in Illinois", latest edition, the City of Lake Forest codes and regulations, the project notes and specifications.

1. Work under this section shall include, but not be limited to, the following:
   a. Clearing and removal of all undesirable vegetative growth within the construction area except as noted otherwise on the plans.
   b. Removing unsuitable materials as specified from paved and playground areas and other designated areas.
   c. Clay cut and clay fill with compaction within paved and playground areas and other designated areas.
   d. Excavation and grading of the entire site per plan, including construction of berms, swales, etc., as shown on these plans.
   e. Placement and construction of structural and non-structural fills.
   f. If required, removal from site and disposal of any excess or unsuitable material upon completion of mass grading.
   g. Movement and compaction of spoil material from the construction of underground utilities.
   h. Final shaping and trimming to the lines, grades and cross-sections shown in these plans, and topsoil placement to design finish grade elevations.
   i. Soil erosion control measures in accordance with the applicable specifications and county requirements.
2. Silt fence and perimeter erosion barrier as shown in the construction plans shall be erected prior to mass earthwork.
3. It is the Contractor's responsibility to determine all material quantities and apprise themself of all site conditions. No claims for extra work will be recognized unless ordered in writing by the Owner.
4. The grading operations are to be closely supervised and inspected, particularly during the removal of unsuitable material and the construction of embankments, by the geotechnical engineer or his representative. All testing, inspection and supervision of soil quality, unsuitable removal and its replacement, and other soils related operations shall be entirely the responsibility of the geotechnical engineer.
5. The grading and construction of the site improvements shall not cause ponding of stormwater except as noted on the plans. All areas adjacent to these improvements shall be graded to allow positive drainage.
6. The proposed grading elevations shown on the plans are finish grade unless otherwise noted. A minimum of six inches (6") of topsoil is to be placed before finish grade elevations are achieved, except where noted otherwise. Topsoil depth shall be increased as needed if on-site earth fill is not available and for construction of berms.
7. It is anticipated that topsoil and earth cuts and fills will balance on-site with no import or export needed. The Contractor shall notify the Owner and/or Engineer should it be determined prior to or during construction that the earthwork will not balance.
8. All disturbed areas to be restored according to the planting plan.
9. All disturbed areas shall be stabilized with NA Green S75 erosion control blanket, or approved equal, unless otherwise noted.
10. The Contractor is to locate all utilities, public and private, prior to beginning construction. Contractor will be responsible for any damages to utilities caused by their work. Contact J.U.L.I.E. 72 hours prior to construction at 1-800-982-0123 or (811) for location of utilities and contractor shall be responsible for protection of the same.
11. The Contractor shall notify the Architect or Engineer if existing utility lines of any nature are encountered that conflict in location with new construction so that the conflict may be resolved.
12. The Contractor shall be responsible for the protection of all public and private utilities even though they may not be shown on the plans. Any utility damaged during construction shall be repaired or replaced to the satisfaction of the Owner and the Contractor's expense.
13. The Contractor shall be required to make arrangements for the proper bracing, shoring and other required protection of all roadways, structures, poles, cables and pipe lines before construction begins. He shall be responsible for any damage to the streets or roadways and associated structures and shall make repairs as necessary to the satisfaction of the Owner at his own expense.
14. The Contractor shall confirm the location (horizontal and vertical) of all utility pipes and structures to which a new connection is being made prior to constructing the new pipe. He shall notify the Architect or Engineer should any discrepancy be found between the location shown on the plans and the location determined in the field.

SCALE: 1" = 20'-0"

RVi
22 East Chicago Avenue
Suite 200a
Naperville, IL 60540
Tel: 312.634.2100
www.rvlplanning.com

PREPARED FOR

CITY OF LAKE FOREST

800 N. FIELD DRIVE
LAKE FOREST, ILLINOIS 60045

CONSULTANTS

CIVIL ENGINEER
HEY AND ASSOCIATES, INC.
26575 W. COMMERCE DRIVE
SUITE 601
VOLO, ILLINOIS 60073
T 847.740.0888

ELECTRICAL ENGINEER
NOVA ENGINEERING, PC
2338 S. CLINE AVENUE
SCHERERVILLE, INDIANA 46375
T 219.865.3352

SOUTH PARK PHASE TWO

ISSUE FOR BID
150 S. MAYWOOD RD.
LAKE FOREST, ILLINOIS 60045

PROJECT NO:	26000793
DATE:	10/28/2026
DRAWN:	BCB/BEG
REVIEWED:	CTM

OCTOBER 28, 2026
REVISIONS:

NO.	DATE	ISSUE

GRADING AND DRAINAGE PLAN ENLARGEMENTS

C2.2

01_ORIGINAL ISSUE

E:\Projects\26-0075 RVI - South Park Improvements\05 CAD\26-0075 RVI South Park.dwg 10/27/2026 corey mase

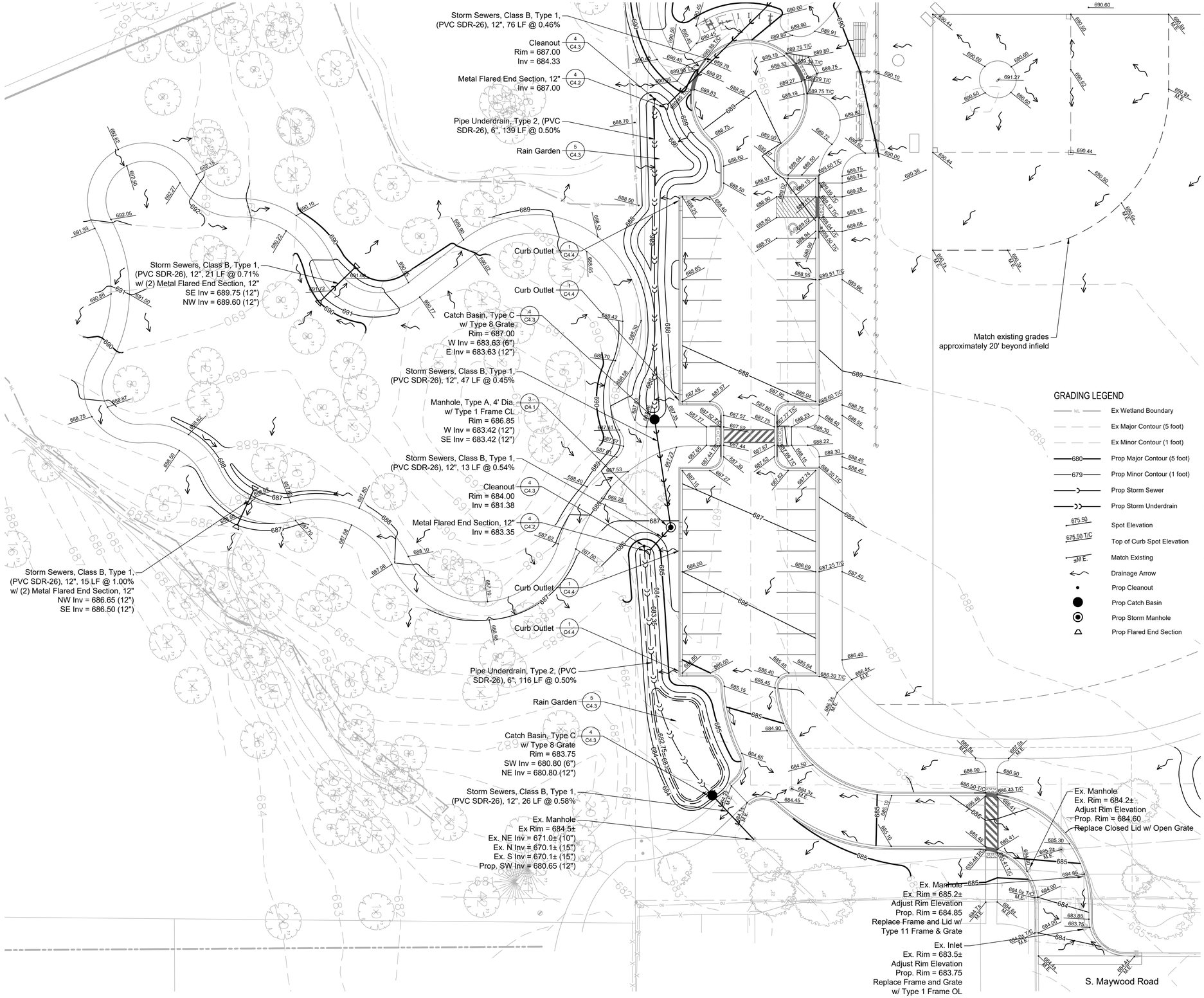

GRADING LEGEND

- Ex Wetland Boundary
- Ex Major Contour (5 foot)
- Ex Minor Contour (1 foot)
- Prop Major Contour (5 foot)
- Prop Minor Contour (1 foot)
- Prop Storm Sewer
- Prop Storm Underdrain
- Spot Elevation
- Top of Curb Spot Elevation
- Match Existing
- Drainage Arrow
- Prop Cleanout
- Prop Catch Basin
- Prop Storm Manhole
- Prop Flared End Section

GRADING AND DRAINAGE NOTES

All work done under this heading will be done in accordance with applicable provisions of the "Standard Specifications for Road and Bridge Construction", State of Illinois, Department of Transportation, adopted January 1, 2026, and revisions thereto, the "Standard Specifications for Water and Sewer Construction in Illinois", latest edition, the City of Lake Forest codes and regulations, the project notes and specifications.

1. Work under this section shall include, but not be limited to, the following:
   a. Clearing and removal of all undesirable vegetative growth within the construction area except as noted otherwise on the plans.
   b. Removing unsuitable materials as specified from paved and playground areas and other designated areas.
   c. Clay cut and clay fill with compaction within paved and playground areas and other designated areas.
   d. Excavation and grading of the entire site per plan, including construction of berms, swales, etc., as shown on these plans.
   e. Placement and construction of structural and non-structural fills.
   f. If required, removal from site and disposal of any excess or unsuitable material upon completion of mass grading.
   g. Movement and compaction of spoil material from the construction of underground utilities.
   h. Final shaping and trimming to the lines, grades and cross-sections shown in these plans, and topsoil placement to design finish grade elevations.
   i. Soil erosion control measures in accordance with the applicable specifications and county requirements.
2. Silt fence and perimeter erosion barrier as shown in the construction plans shall be erected prior to mass earthwork.
3. It is the Contractor's responsibility to determine all material quantities and apprise themself of all site conditions. No claims for extra work will be recognized unless ordered in writing by the Owner.
4. The grading operations are to be closely supervised and inspected, particularly during the removal of unsuitable material and the construction of embankments, by the geotechnical engineer or his representative. All testing, inspection and supervision of soil quality, unsuitable removal and its replacement, and other soils related operations shall be entirely the responsibility of the geotechnical engineer.
5. The grading and construction of the site improvements shall not cause ponding of stormwater except as noted on the plans. All areas adjacent to these improvements shall be graded to allow positive drainage.
6. The proposed grading elevations shown on the plans are finish grade unless otherwise noted. A minimum of six inches (6") of topsoil is to be placed before finish grade elevations are achieved, except where noted otherwise. Topsoil depth shall be increased as needed if on-site earth fill is not available and for construction of berms.
7. It is anticipated that topsoil and earth cuts and fills will balance on-site with no import or export needed. The Contractor shall notify the Owner and/or Engineer should it be determined prior to or during construction that the earthwork will not balance.
8. All disturbed areas to be restored according to the planting plan.
9. All disturbed areas shall be stabilized with NA Green S75 erosion control blanket, or approved equal, unless otherwise noted.
10. The Contractor is to locate all utilities, public and private, prior to beginning construction. Contractor will be responsible for any damages to utilities caused by their work. Contact J.U.L.I.E. 72 hours prior to construction at 1-800-982-0123 or (811) for location of utilities and contractor shall be responsible for protection of the same.
11. The Contractor shall notify the Architect or Engineer if existing utility lines of any nature are encountered that conflict in location with new construction so that the conflict may be resolved.
12. The Contractor shall be responsible for the protection of all public and private utilities even though they may not be shown on the plans. Any utility damaged during construction shall be repaired or replaced to the satisfaction of the Owner and the Contractor's expense.
13. The Contractor shall be required to make arrangements for the proper bracing, shoring and other required protection of all roadways, structures, poles, cables and pipe lines before construction begins. He shall be responsible for any damage to the streets or roadways and associated structures and shall make repairs as necessary to the satisfaction of the Owner at his own expense.
14. The Contractor shall confirm the location (horizontal and vertical) of all utility pipes and structures to which a new connection is being made prior to constructing the new pipe. He shall notify the Architect or Engineer should any discrepancy be found between the location shown on the plans and the location determined in the field.

0 10' 20' 40'
SCALE: 1" = 20'-0"

RVi
22 East Chicago Avenue
Suite 200a
Naperville, IL 60540
Tel: 312.634.2100
www.rvlplanning.com

PREPARED FOR
CITY OF LAKE FOREST
800 N. FIELD DRIVE
LAKE FOREST, ILLINOIS 60045

CONSULTANTS

CIVIL ENGINEER
HEY AND ASSOCIATES, INC.
26575 W. COMMERCE DRIVE
SUITE 601
VOLO, ILLINOIS 60073
T 847.740.0888

ELECTRICAL ENGINEER
NOVA ENGINEERING, PC
2338 S. CLINE AVENUE
SCHERERVILLE, INDIANA 46375
T 219.865.3352

SOUTH PARK PHASE TWO

ISSUE FOR BID
150 S. MAYWOOD RD.
LAKE FOREST, ILLINOIS 60045

PROJECT NO:	26000793
DATE:	10/28/2026
DRAWN:	BCB/BEG
REVIEWED:	CTM

OCTOBER 28, 2026
REVISIONS:

NO.	DATE	ISSUE

GRADING AND DRAINAGE PLAN ENLARGEMENT

C2.3

01_ORIGINAL ISSUE

E:\Projects\25-0075 RVI - South Park Improvements\05 CAD\25-0075 RVI South Park.dwg 10/27/2026 corey mase



UTILITY NOTES

1. All utility construction shall be in accordance with the "Standard Specifications for Road and Bridge Construction", State of Illinois, Department of Transportation, latest edition, and revisions thereto, the "Standard Specifications for Water and Sewer Construction in Illinois", latest edition, the Village of Wauconda codes and regulations, the project notes and specifications.
2. The Contractor is to locate all utilities, public and private, prior to beginning construction. Contractor will be responsible for any damages to utilities caused by their work. Contact J.U.L.I.E. 72 hours prior to construction at 1-800-982-0123 or (811) for location of utilities and contractor shall be responsible for protection of the same.
3. The Contractor shall notify the Architect or Engineer if existing utility lines of any nature are encountered that conflict in location with new construction so that the conflict may be resolved.
4. The Contractor shall be responsible for the protection of all public and private utilities even though they may not be shown on the plans. Any utility damaged during construction shall be repaired or replaced to the satisfaction of the Owner and the Contractor's expense.
5. The Contractor shall be required to make arrangements for the proper bracing, shoring and other required protection of all roadways, structures, poles, cables and pipe lines before construction begins. Contractor shall be responsible for any damage to the streets or roadways and associated structures and shall make repairs as necessary to the satisfaction of the Owner at his own expense.
6. The Contractor shall confirm the horizontal and vertical locations of all existing utility pipes prior to constructing the new utility pipes. Contractor shall notify the Architect or Engineer should any discrepancy be found between the location shown on the plans and the location determined in the field or if any proposed pipes will be in conflict with any utilities not indicated on the plans.
7. All water piping shall have a minimum depth of cover of 5-1/2 feet.
8. A minimum of 10 feet of horizontal separation shall be provided between water main/service pipes and sewer pipes, except at crossings. Where water and sewer pipes cross, the invert of the water pipe shall be a minimum of 18 inches above the top of the sewer pipe. If the water pipe cannot be installed as described above while maintaining a minimum depth of 5-1/2 feet, vertical separation according to Detail 4 on Sheet C4.3 shall be provided.
9. Water main protection, where required at utility crossings, shall be provided by using water main quality pipe for the sewer pipe to 10' each side of the crossing or by providing water main quality casing over the water service to 10' each side of the crossing.
10. The Contractor shall confirm the location of the existing water service at the connection points prior to installing any new water service piping. The Contractor shall notify the Architect or Engineer if the existing water main location indicated on the plans does not match the field conditions.

UTILITY LEGEND

- Ex Wetland Boundary
- Ex Major Contour (5 foot)
- Ex Minor Contour (1 foot)
- 680 Prop Major Contour (5 foot)
- 679 Prop Minor Contour (1 foot)
- Existing Sanitary Sewer
- Existing Water Service
- Proposed Storm Sewer
- Proposed Water Service
- Prop Cleanout
- Prop Catch Basin
- Prop Storm Manhole
- Prop Flared End Section
- Proposed Valve & Box

0 30' 60' 120'
SCALE: 1" = 60'-0"

RVi
22 East Chicago Avenue
Suite 200a
Naperville, IL 60540
Tel: 312.634.2100
www.rviplanning.com

PREPARED FOR
CITY OF LAKE FOREST

800 N. FIELD DRIVE
LAKE FOREST, ILLINOIS 60045

CONSULTANTS

CIVIL ENGINEER
HEY AND ASSOCIATES, INC.
26575 W. COMMERCE DRIVE
SUITE 601
VOLO, ILLINOIS 60073
T 847.740.0888

ELECTRICAL ENGINEER
NOVA ENGINEERING, PC
2338 S. CLINE AVENUE
SCHERERVILLE, INDIANA 46375
T 219.865.3352

SOUTH PARK PHASE TWO

ISSUE FOR BID

150 S. MAYWOOD RD.
LAKE FOREST, ILLINOIS 60045

PROJECT NO:	26000793
DATE:	10/28/2026
DRAWN:	BCB/BEG
REVIEWED:	CTM

OCTOBER 28, 2026
REVISIONS:

NO.	DATE	ISSUE

UTILITY PLAN OVERALL

C3.0

01_ORIGINAL ISSUE

E:\Projects\26-0075.RVI - South Park Improvements\05 CAD\26-0075 RVi South Park.dwg 10/27/2026 corey mase

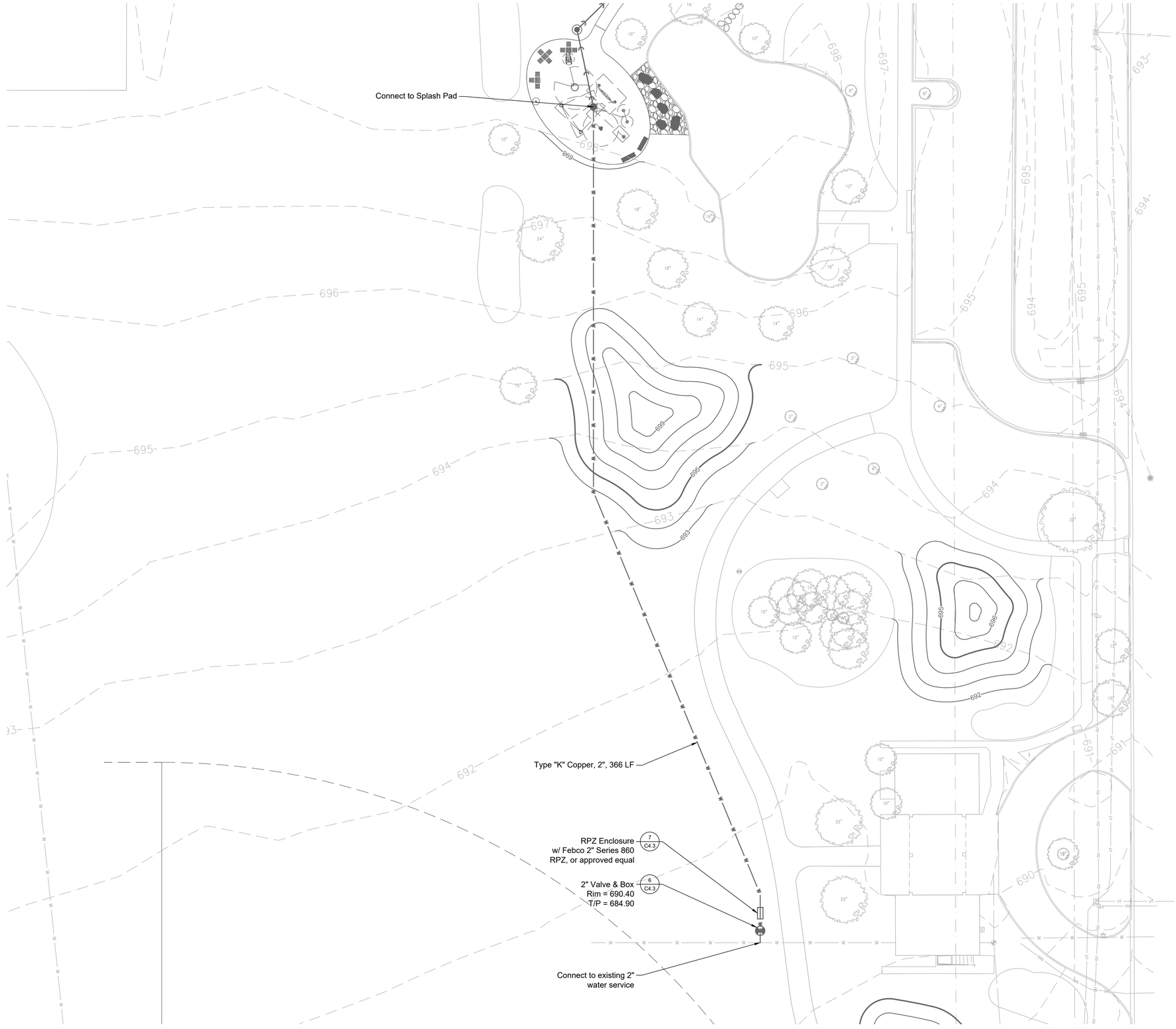

UTILITY NOTES

1. All utility construction shall be in accordance with the "Standard Specifications for Road and Bridge Construction", State of Illinois, Department of Transportation, latest edition, and revisions thereto, the "Standard Specifications for Water and Sewer Construction in Illinois", latest edition, the Village of Wauconda codes and regulations, the project notes and specifications.
2. The Contractor is to locate all utilities, public and private, prior to beginning construction. Contractor will be responsible for any damages to utilities caused by their work. Contact J.U.L.I.E. 72 hours prior to construction at 1-800-982-0123 or (811) for location of utilities and contractor shall be responsible for protection of the same.
3. The Contractor shall notify the Architect or Engineer if existing utility lines of any nature are encountered that conflict in location with new construction so that the conflict may be resolved.
4. The Contractor shall be responsible for the protection of all public and private utilities even though they may not be shown on the plans. Any utility damaged during construction shall be repaired or replaced to the satisfaction of the Owner and the Contractor's expense.
5. The Contractor shall be required to make arrangements for the proper bracing, shoring and other required protection of all roadways, structures, poles, cables and pipe lines before construction begins. Contractor shall be responsible for any damage to the streets or roadways and associated structures and shall make repairs as necessary to the satisfaction of the Owner at his own expense.
6. The Contractor shall confirm the horizontal and vertical locations of all existing utility pipes prior to constructing the new utility pipes. Contractor shall notify the Architect or Engineer should any discrepancy be found between the location shown on the plans and the location determined in the field or if any proposed pipes will be in conflict with any utilities not indicated on the plans.
7. All water piping shall have a minimum depth of cover of 5-1/2 feet.
8. A minimum of 10 feet of horizontal separation shall be provided between water main/service pipes and sewer pipes, except at crossings. Where water and sewer pipes cross, the invert of the water pipe shall be a minimum of 18 inches above the top of the sewer pipe. If the water pipe cannot be installed as described above while maintaining a minimum depth of 5-1/2 feet, vertical separation according to Detail 4 on Sheet C4.3 shall be provided.
9. Water main protection, where required at utility crossings, shall be provided by using water main quality pipe for the sewer pipe to 10' each side of the crossing or by providing water main quality casing over the water service to 10' each side of the crossing.
10. The Contractor shall confirm the location of the existing water service at the connection points prior to installing any new water service piping. The Contractor shall notify the Architect or Engineer if the existing water main location indicated on the plans does not match the field conditions.

UTILITY LEGEND

- Ex Wetland Boundary
- Ex Major Contour (5 foot)
- Ex Minor Contour (1 foot)
- 680 Prop Major Contour (5 foot)
- 679 Prop Minor Contour (1 foot)
- Existing Sanitary Sewer
- Existing Water Service
- Proposed Storm Sewer
- Proposed Water Service
- Prop Cleanout
- Prop Catch Basin
- Prop Storm Manhole
- Prop Flared End Section
- Proposed Valve & Box

0 10' 20' 40'
SCALE: 1" = 20'-0"

RVi
22 East Chicago Avenue
Suite 200a
Naperville, IL 60540
Tel: 312.634.2100
www.rviplanning.com

PREPARED FOR
CITY OF LAKE FOREST

800 N. FIELD DRIVE
LAKE FOREST, ILLINOIS 60045

CONSULTANTS

CIVIL ENGINEER
HEY AND ASSOCIATES, INC.
26575 W. COMMERCE DRIVE
SUITE 601
VOLO, ILLINOIS 60073
T 847.740.0888

ELECTRICAL ENGINEER
NOVA ENGINEERING, PC
2338 S. CLINE AVENUE
SCHERERVILLE, INDIANA 46375
T 219.865.3352

SOUTH PARK PHASE TWO

ISSUE FOR BID
150 S. MAYWOOD RD.
LAKE FOREST, ILLINOIS 60045

PROJECT NO:	26000793
DATE:	10/28/2026
DRAWN:	BCB/BEG
REVIEWED:	CTM

OCTOBER 28, 2026
REVISIONS:

NO.	DATE	ISSUE

UTILITY PLAN ENLARGEMENT

C3.1

01_ORIGINAL ISSUE

E:\Projects\26-0075.RVI - South Park Improvements\05.CAD\26-0075.RVI.South Park.dwg 10/27/2026 corey mase

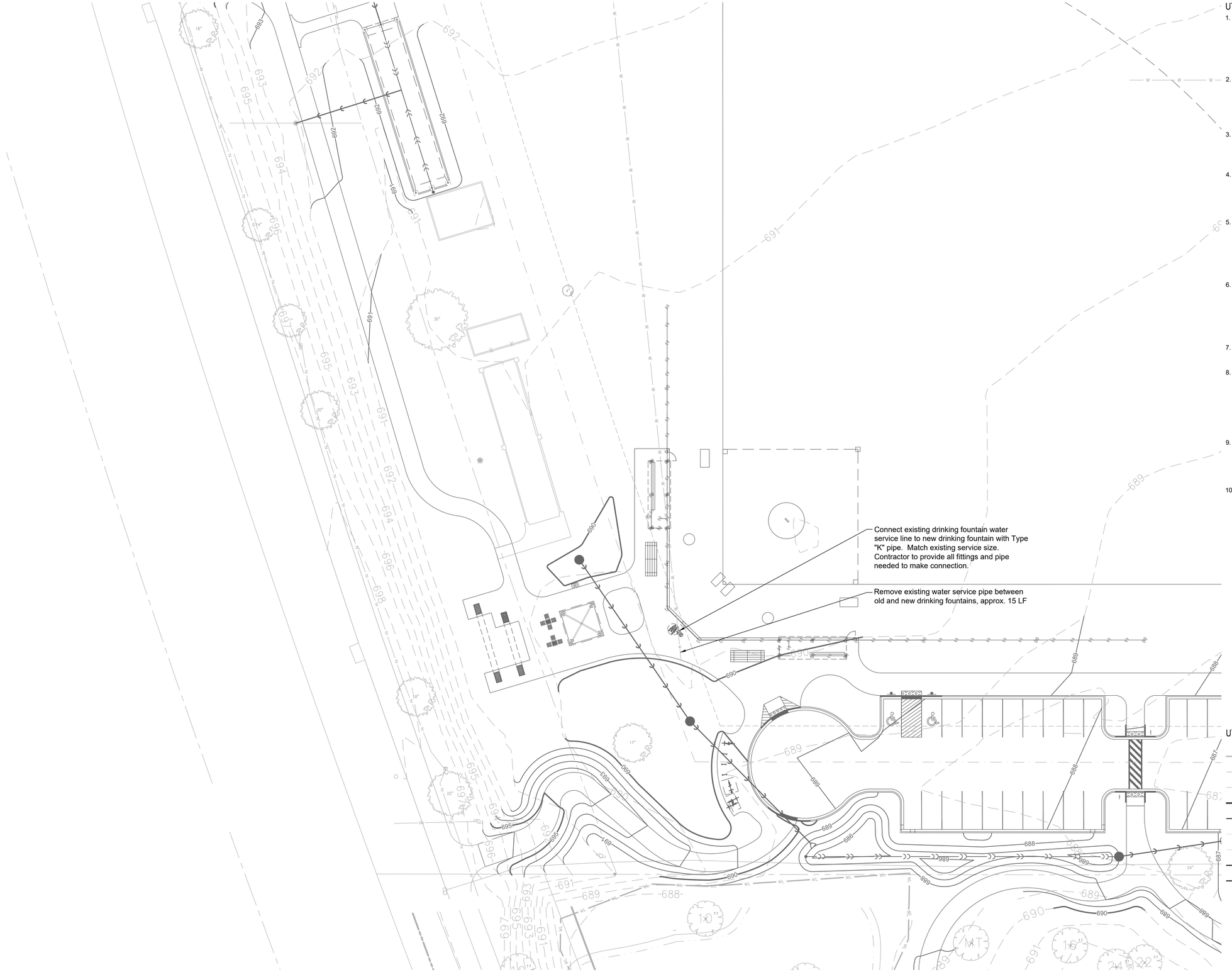

UTILITY NOTES

1. All utility construction shall be in accordance with the "Standard Specifications for Road and Bridge Construction", State of Illinois, Department of Transportation, latest edition, and revisions thereto, the "Standard Specifications for Water and Sewer Construction in Illinois", latest edition, the Village of Wauconda codes and regulations, the project notes and specifications.
2. The Contractor is to locate all utilities, public and private, prior to beginning construction. Contractor will be responsible for any damages to utilities caused by their work. Contact J.U.L.I.E. 72 hours prior to construction at 1-800-982-0123 or (811) for location of utilities and contractor shall be responsible for protection of the same.
3. The Contractor shall notify the Architect or Engineer if existing utility lines of any nature are encountered that conflict in location with new construction so that the conflict may be resolved.
4. The Contractor shall be responsible for the protection of all public and private utilities even though they may not be shown on the plans. Any utility damaged during construction shall be repaired or replaced to the satisfaction of the Owner and the Contractor's expense.
5. The Contractor shall be required to make arrangements for the proper bracing, shoring and other required protection of all roadways, structures, poles, cables and pipe lines before construction begins. Contractor shall be responsible for any damage to the streets or roadways and associated structures and shall make repairs as necessary to the satisfaction of the Owner at his own expense.
6. The Contractor shall confirm the horizontal and vertical locations of all existing utility pipes prior to constructing the new utility pipes. Contractor shall notify the Architect or Engineer should any discrepancy be found between the location shown on the plans and the location determined in the field or if any proposed pipes will be in conflict with any utilities not indicated on the plans.
7. All water piping shall have a minimum depth of cover of 5-1/2 feet.
8. A minimum of 10 feet of horizontal separation shall be provided between water main/service pipes and sewer pipes, except at crossings. Where water and sewer pipes cross, the invert of the water pipe shall be a minimum of 18 inches above the top of the sewer pipe. If the water pipe cannot be installed as described above while maintaining a minimum depth of 5-1/2 feet, vertical separation according to Detail 4 on Sheet C4.3 shall be provided.
9. Water main protection, where required at utility crossings, shall be provided by using water main quality pipe for the sewer pipe to 10' each side of the crossing or by providing water main quality casing over the water service to 10' each side of the crossing.
10. The Contractor shall confirm the location of the existing water service at the connection points prior to installing any new water service piping. The Contractor shall notify the Architect or Engineer if the existing water main location indicated on the plans does not match the field conditions.

UTILITY LEGEND

- Ex Wetland Boundary
- Ex Major Contour (5 foot)
- Ex Minor Contour (1 foot)
- 680 Prop Major Contour (5 foot)
- 679 Prop Minor Contour (1 foot)
- Existing Sanitary Sewer
- Existing Water Service
- Proposed Storm Sewer
- Proposed Water Service
- Prop Cleanout
- Prop Catch Basin
- Prop Storm Manhole
- Prop Flared End Section
- Proposed Valve & Box

0 10' 20' 40'
SCALE: 1" = 20'-0"

RVi
22 East Chicago Avenue
Suite 200a
Naperville, IL 60540
Tel: 312.634.2100
www.rviplanning.com

PREPARED FOR
CITY OF LAKE FOREST

800 N. FIELD DRIVE
LAKE FOREST, ILLINOIS 60045

CONSULTANTS

CIVIL ENGINEER
HEY AND ASSOCIATES, INC.
26575 W. COMMERCE DRIVE
SUITE 601
VOLO, ILLINOIS 60073
T 847.740.0888

ELECTRICAL ENGINEER
NOVA ENGINEERING, PC
2338 S. CLINE AVENUE
SCHERERVILLE, INDIANA 46375
T 219.865.3352

SOUTH PARK PHASE TWO

ISSUE FOR BID
150 S. MAYWOOD RD.
LAKE FOREST, ILLINOIS 60045

PROJECT NO:	26000793
DATE:	10/28/2026
DRAWN:	BCB/BEG
REVIEWED:	CTM

OCTOBER 28, 2026
REVISIONS:

NO.	DATE	ISSUE

UTILITY PLAN ENLARGEMENT

C3.2

01_ORIGINAL ISSUE

E:\Projects\26-0075 RVI - South Park Improvements\05 CAD\26-0075 RVI South Park.dwg 10/27/2026 corey mase

ROLLED EROSION CONTROL PRODUCTS

STAKING PATTERN GUIDE

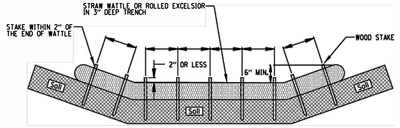

NOTES:
1. OVERLAP MINIMUM IS THE DIAMETER OF THE ROLL.
2. 4" SPACING FOR WATTLES.
3. 2" SPACING FOR ROLLED EXCELSIOR.
4. OR SPACE ACCORDING TO MANUFACTURER'S SPECIFICATIONS.

STAKE DETAIL

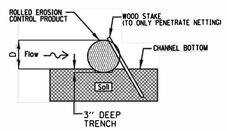

NOTES:
1. DRAWINGS ARE NOT TO SCALE.
2. ENDS OF WATTLES OR ROLLED EXCELSIOR SHALL BE TURNED AT LEAST 6" UPSLOPE.
3. RECOMMENDED STAKES ARE 1 1/8" WIDE x 1 1/8" THICK x 30" LONG.
4. STAKES SHALL NOT EXTEND ABOVE THE STRAW WATTLE MORE THAN 2".
5. SPACING THE TOE OF THE UPSTREAM DITCH CHECK SHALL CREATE A HORIZONTAL LINE WITH THE TOP OF THE DOWNSTREAM DITCH CHECK.

REFERENCE		STANDARD DWG. NO.
Project		IUM-514
Designed ____ Date ____		SHEET 1 OF 1
Checked ____ Date ____		DATE 08-2-2019
Approved ____ Date ____		

1 Perimeter Erosion Barrier Detail (Not to Scale)

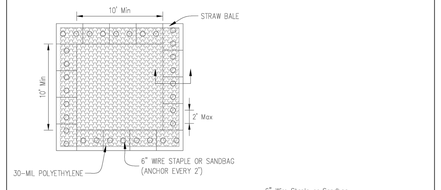

NOTES:
1. Maintaining temporary concrete washout facilities shall include removing and disposing of hardend concrete and/or slurry and returning the facilities to a functional condition.
2. Facility shall be cleaned or reconstructed in a new area once washout becomes two-thirds full.
3. Each straw bale is to be staked in place using (2) 2"x2"x4' wooden stakes.

TEMPORARY CONCRETE WASHOUT FACILITY – STRAW BALE

2 Temporary Concrete Washout Detail (Not to Scale)

EROSION CONTROL BLANKET – TURF REINFORCEMENT MAT (TRM)

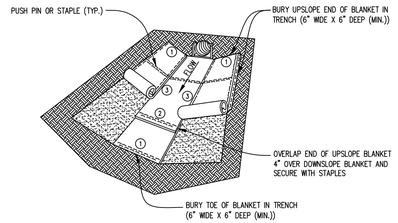

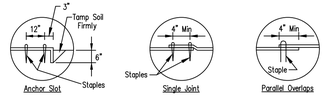

DETAIL 1 DETAIL 2 DETAIL 3

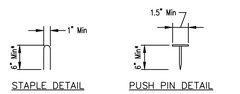

*Note:
1. For sandy soil conditions, staple or push pin shall be a minimum 8 inches.

REFERENCE		STANDARD DWG. NO.
Project		IUM-531
Designed ____ Date ____		SHEET 1 OF 1
Checked ____ Date ____		DATE 02-22-11
Approved ____ Date ____		

3 Erosion Control Blanket & Turf Reinforcement Mat (TRM) Detail (Not to Scale)

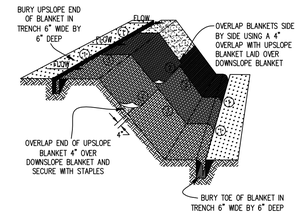

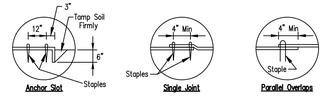

DETAIL 1 DETAIL 2 DETAIL 3

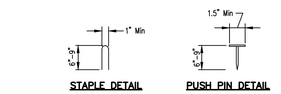

NOTES:
1. Staples shall be placed in a diamond pattern at 2 per s.y. for stiched blankets. Non-stiched shall use 4 staples per s.y. of material. This equates to 200 staples with stiched blanket and 400 stapels with non-stiched blanket per 100 s.y. of material.
2. Staple or push pin lengths shall be selected based on soil type and conditions. (minimum staple length is 6")
3. Erosion control material shall be placed in contact with the soil over a prepared seedbed.
4. All anchor slots shall be stapled at approximately 12" intervals.

EROSION CONTROL BLANKET INSTALLATION DETAILS

4 Erosion Control Blanket Detail (Not to Scale)

INLET PROTECTION – PAVED AREAS DROP-IN PROTECTION

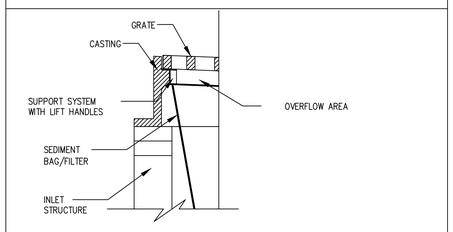

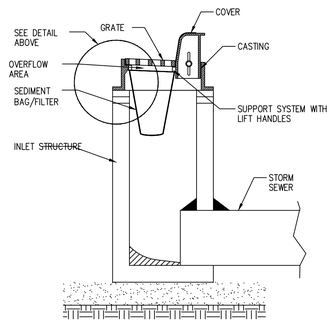

REFERENCE		STANDARD DWG. NO.
Project		IUM-561D
Designed ____ Date ____		SHEET 1 OF 1
Checked ____ Date ____		DATE 01-11-11
Approved ____ Date ____		

5 Inlet Protection (Paved Surfaces) Detail (Not to Scale)

MANUFACTURED ABOVE GRADE INLET PROTECTION

NOT TO SCALE

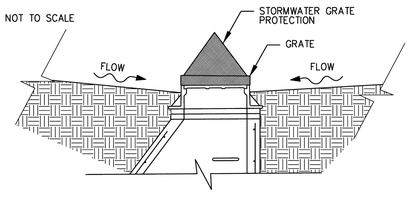

SECTION

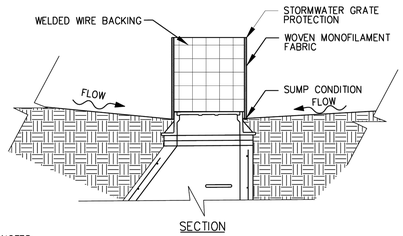

SECTION

NOTES:
1. A maintenance schedule must maintain a sediment accumulation of less than 50% of the height of the inlet protection.
2. Device should be supported.
3. Fabric type should be IUM 592 Standard Table 1 Class 4.

REFERENCE		STANDARD DWG. NO.
Project		IUM-531
Designed ____ Date ____		SHEET 1 OF 1
Checked ____ Date ____		DATE 03-27-2017
Approved ____ Date ____		

6 Inlet Protection (Unpaved Surfaces) Detail (Not to Scale)

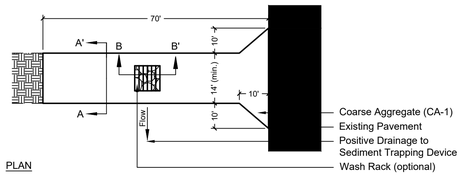

PLAN

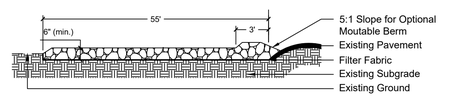

SIDE ELEVATION

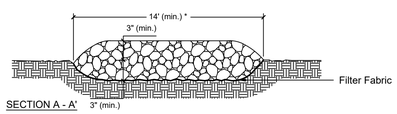

SECTION A - A' 3" (min.)

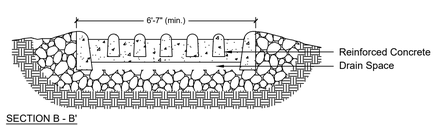

SECTION B - B'

Notes:
1. Filter fabric shall meet the requirements of the specifications and shall be placed over the cleared area prior to the placing of rock.
2. Rock or reclaimed concrete shall meet coarse aggregate gradation CA-1 and be placed according to the standard specifications.
3. Any drainage facilities required because of washing shall be construced according to manufacturer's specifications.
4. If wash racks are used they shall be installed according to the manufacturer's specifications.
* Must extend full width of ingress and egress operation.

7 Stabilized Construction Entrance Detail (If Needed) (Not to Scale)

RVi
22 East Chicago Avenue
Suite 200a
Naperville, IL 60540
Tel: 312.634.2100
www.rvilanning.com

PREPARED FOR

CITY OF LAKE FOREST

800 N. FIELD DRIVE
LAKE FOREST, ILLINOIS 60045

CONSULTANTS

CIVIL ENGINEER
HEY AND ASSOCIATES, INC.
26575 W. COMMERCE DRIVE
SUITE 601
VOLO, ILLINOIS 60073
T 847.740.0888

ELECTRICAL ENGINEER
NOVA ENGINEERING, PC
2338 S. CLINE AVENUE
SCHERERVILLE, INDIANA 46375
T 219.865.3352

SOUTH PARK PHASE TWO

ISSUE FOR BID
150 S. MAYWOOD RD.
LAKE FOREST, ILLINOIS 60045

PROJECT NO: 26000793
DATE: 10/28/2026
DRAWN: BCB/BEG
REVIEWED: CTM

OCTOBER 28, 2026
REVISIONS:
NO. DATE ISSUE

CIVIL DETAILS

C4.0

01_ORIGINAL ISSUE

E:\Projects\26-0075 RVi - South Park Improvements\05 CAD\26-0075 RVi South Park.dwg 10/27/2026 corey mase

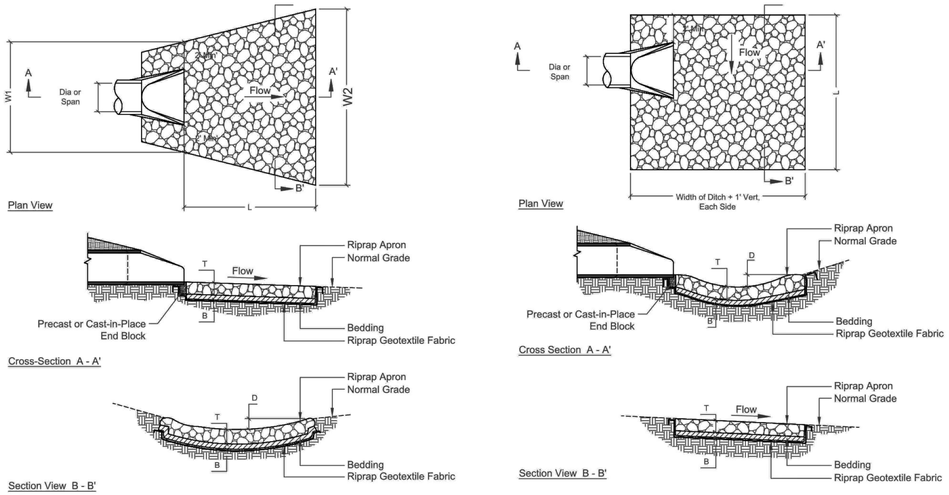

DIA. OF ROUND INLET PIPE (in)	IDOT RIPRAP GRADATION (RR)	RIPRAP APRON THICKNESS (in)	RIPRAP BEDDING THICKNESS (in)	APRON LEGNTH (ft)	APRON WIDTH UPSTREAM (ft)	APRON WIDTH DOWNSTREAM (ft)	DEPTH BELOW NORMAL GRADE (in)
		T	B	L	W1	W2	D
12	RR-3	8.0	NA	12.0	5.0	11.0	6.0
15	RR-3	8.0	NA	14.0	5.0	12.0	6.0
18	RR-4	16.0	6.0	16.0	5.5	13.5	7.0
21	RR-4	16.0	6.0	20.0	6.0	16.0	10.0
24	RR-4	16.0	6.0	20.0	6.0	16.0	10.0

1 Rock Outlet Protection Detail
(Not to Scale)

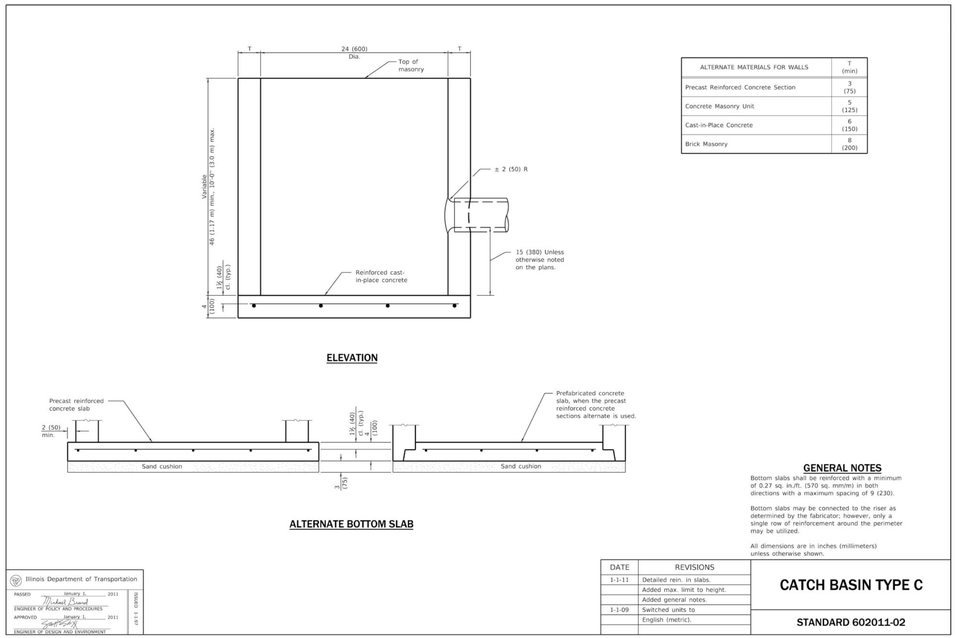

ALTERNATE MATERIALS FOR WALLS	T (min)
Precast Reinforced Concrete Section	3 (75)
Concrete Masonry Unit	5 (125)
Cast-in-Place Concrete	6 (150)
Brick Masonry	8 (200)

GENERAL NOTES

Bottom slabs shall be reinforced with a minimum of 0.27 sq. in./ft. (570 sq. mm/m) in both directions with a maximum spacing of 9 (230).

Bottom slabs may be connected to the riser as determined by the fabricator; however, only a single row of reinforcement around the perimeter may be utilized.

All dimensions are in inches (millimeters) unless otherwise shown.

Illinois Department of Transportation
PASSED January 5, 2011
ENGINEER OF POLICY AND PROCEDURES
APPROVED January 5, 2011
ENGINEER OF DESIGN AND ENVIRONMENT
DISTRICT ONE

DATE	REVISIONS
1-1-11	Detailed rein. in slabs.
	Added max. limit to height.
	Added general notes.
1-1-09	Switched units to
	English (metric).

CATCH BASIN TYPE C

STANDARD 602011-02

2 Catch Basin Type C Detail
(Not to Scale)

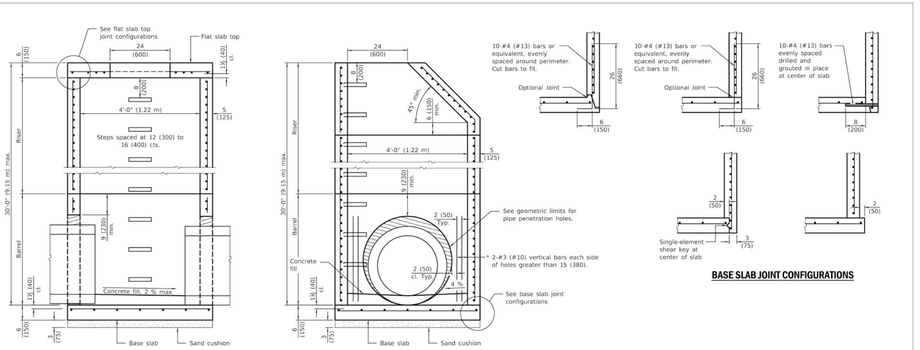

GEOMETRIC LIMITS FOR PIPE PENETRATION HOLES

1. A minimum of 9 (230) of monolithic reinforced concrete shall be maintained above pipe penetration holes > 24 (600).
2. A minimum 12 (300) inside arc length of reinforced concrete shall be maintained between pipe penetration holes > 15 (380).
3. A maximum of 60 percent of the inside perimeter of the reinforced concrete manhole walls may be removed.
4. Horizontal joints that intersect pipe penetration holes > 15 (380) shall have one joint splice for every location around the perimeter of the joint where the inside arc length between pipe penetration holes is < 24 (600). See joint splice detail.
5. The recommended pipe penetration hole is equal to the O.D. of the pipe plus 4 (100).
6. Only pipe penetration holes ≤ 15 (380) are allowed in riser sections.

SHEAR KEY GEOMETRY
(Reinforcement not shown for clarity)

GENERAL NOTES

The manufacturer shall ensure that all precast manhole sections are additionally reinforced where required to resist damage from handling, shipping and installation stresses.

Lifting holes shall be located in the sections as per the manufacturer's recommendations, except as noted.

See Standard 602701 for details of manhole steps.

All dimensions are in inches (millimeters) unless otherwise noted.

Illinois Department of Transportation
PASSED March 5, 2019
ENGINEER OF POLICY AND PROCEDURES
APPROVED March 5, 2019
ENGINEER OF DESIGN AND ENVIRONMENT
DISTRICT ONE

DATE	REVISIONS
3-1-19	Moved wall reinforcement from
	inside face to middle.
1-1-19	Expanded / refined reinforcement
	options. Increased manhole depths.

PRECAST MANHOLE TYPE A 4' (1.22 m) DIAMETER
(Sheet 1 of 2)

STANDARD 602401-06

3 Precast Manhole Type A 4' Diameter Detail
(Not to Scale)

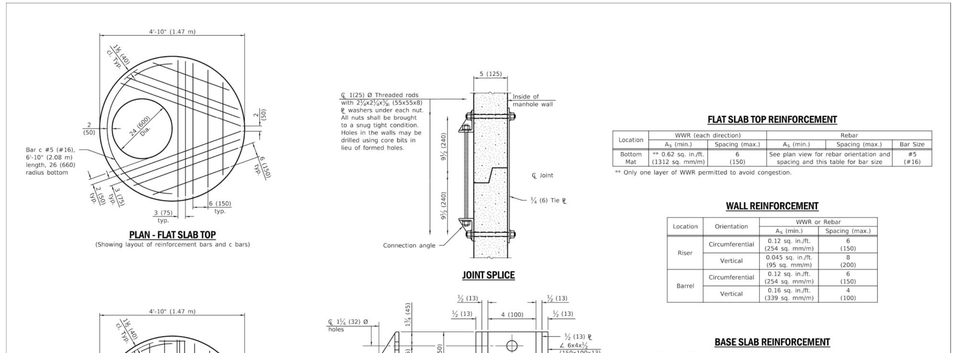

FLAT SLAB TOP REINFORCEMENT

Location	WWR (each direction)		Rebar		
	A_s (min.)	Spacing (max.)	A_s (min.)	Spacing (max.)	Bar Size
Bottom Mat	** 0.62 sq. in./ft. (1312 sq. mm/m)	6 (150)	See plan view for rebar orientation and spacing and this table for bar size		#5 (#16)

** Only one layer of WWR permitted to avoid congestion.

WALL REINFORCEMENT

Location	Orientation	WWR or Rebar	
		A_s (min.)	Spacing (max.)
Riser	Circumferential	0.12 sq. in./ft. (254 sq. mm/m)	6 (150)
	Vertical	0.045 sq. in./ft. (95 sq. mm/m)	8 (200)
Barrel	Circumferential	0.12 sq. in./ft. (254 sq. mm/m)	6 (150)
	Vertical	0.16 sq. in./ft. (339 sq. mm/m)	4 (100)

BASE SLAB REINFORCEMENT

Location	Total Height	WWR or Rebar (each direction)	
		A_s (min.)	Spacing (max.)
Top Mat	≤ 20 ft. (6.10 m)	0.24 sq. in./ft. (508 sq. mm/m)	10 (250)
	> 20 ft. (6.10 m)	0.24 sq. in./ft. (508 sq. mm/m)	10 (250)

Illinois Department of Transportation
PASSED March 5, 2019
ENGINEER OF POLICY AND PROCEDURES
APPROVED March 5, 2019
ENGINEER OF DESIGN AND ENVIRONMENT
DISTRICT ONE

PRECAST MANHOLE TYPE A 4' (1.22 m) DIAMETER
(Sheet 2 of 2)

STANDARD 602401-06

RVi
22 East Chicago Avenue
Suite 200a
Naperville, IL 60540
Tel: 312.634.2100
www.rvilanning.com

PREPARED FOR
CITY OF LAKE FOREST

800 N. FIELD DRIVE
LAKE FOREST, ILLINOIS 60045

CONSULTANTS

CIVIL ENGINEER
HEY AND ASSOCIATES, INC.
26575 W. COMMERCE DRIVE
SUITE 601
VOLO, ILLINOIS 60073
T 847.740.0888

ELECTRICAL ENGINEER
NOVA ENGINEERING, PC
2338 S. CLINE AVENUE
SCHERERVILLE, INDIANA 46375
T 219.865.3352

SOUTH PARK PHASE TWO

ISSUE FOR BID
150 S. MAYWOOD RD.
LAKE FOREST, ILLINOIS 60045

PROJECT NO:	26000793
DATE:	10/28/2026
DRAWN:	BCB/BEG
REVIEWED:	CTM

OCTOBER 28, 2026
REVISIONS:

NO.	DATE	ISSUE

CIVIL DETAILS

C4.1

01_ORIGINAL ISSUE

E:\Projects\26-0075 RVI - South Park Improvements\05 CAD\26-0075 RVI South Park.dwg 10/27/2026 corey.maas

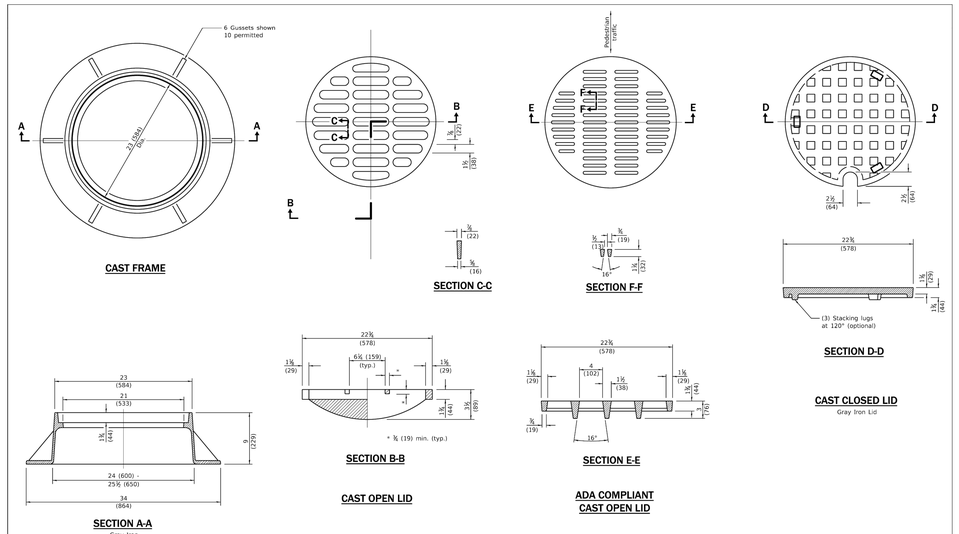

All dimensions are in inches (millimeters) unless otherwise shown.

Illinois Department of Transportation
PASSED January 1, 2020 — ENGINEER OF POLICY AND PROCEDURES
APPROVED January 1, 2020 — ENGINEER OF DESIGN AND ENVIRONMENT
DISKS 1 EA

DATE	REVISIONS
1-1-20	Revised dimension in Section B-B of cast open lid.
1-1-15	Revised dimensioning of frame. Added ADA compliant open lid.
1-1-09	Switched units to English (metric).

FRAME AND LIDS TYPE 1

STANDARD 604001-05

1 Frame and Lids Type 1 Detail (Not to Scale)

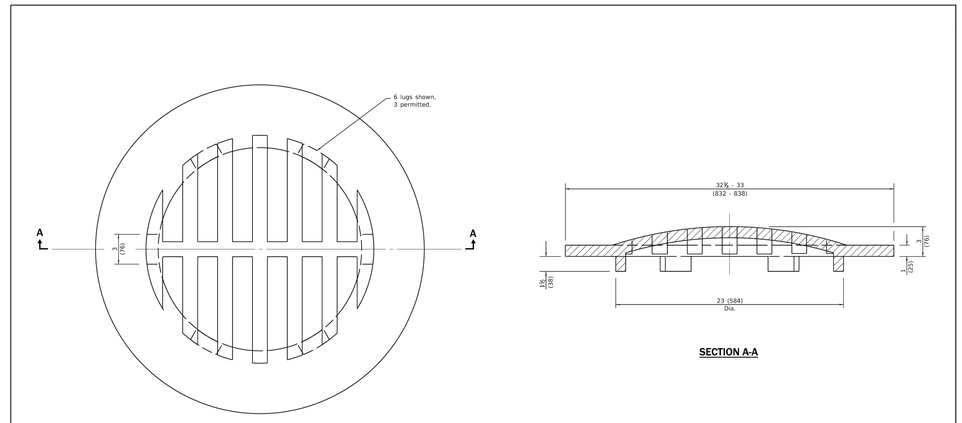

All dimensions are in inches (millimeters) unless otherwise shown.

Illinois Department of Transportation
PASSED January 1, 2015 — ENGINEER OF POLICY AND PROCEDURES
APPROVED January 1, 2015 — ENGINEER OF DESIGN AND ENVIRONMENT
DISKS 1 EA

DATE	REVISIONS
1-1-15	Revised dimensions.
1-1-09	Switched units to English (metric).

GRATE TYPE 8

STANDARD 604036-03

2 Grate Type 8 Detail (Not to Scale)

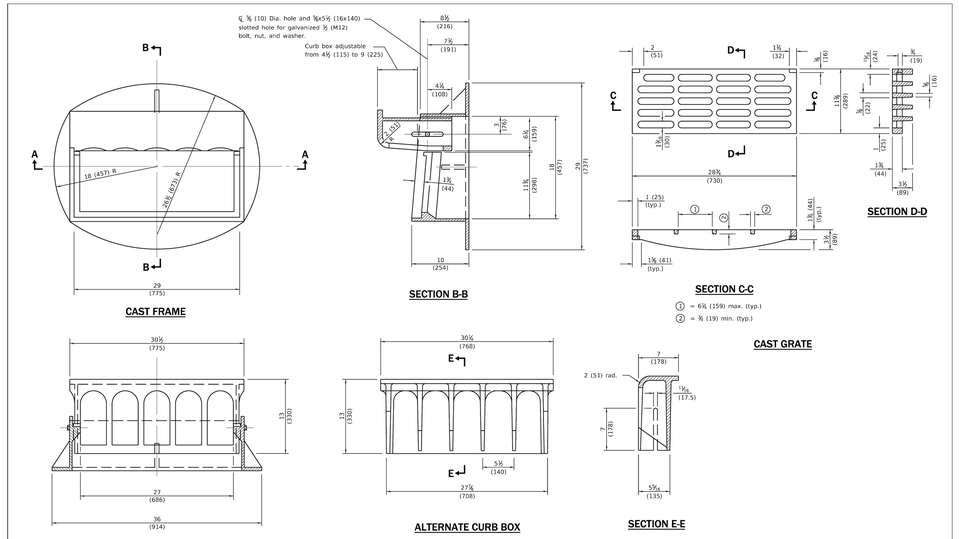

All dimensions are in inches (millimeters) unless otherwise shown.

Illinois Department of Transportation
PASSED January 1, 2015 — ENGINEER OF POLICY AND PROCEDURES
APPROVED January 1, 2015 — ENGINEER OF DESIGN AND ENVIRONMENT
DISKS 1 EA

DATE	REVISIONS
1-1-15	Revised dimensions of frame and alternate curb box.
4-1-09	Switched units to English (metric).

FRAME AND GRATE TYPE 11

STANDARD 604051-04

3 Frame and Grate Type 11 Detail (Not to Scale)

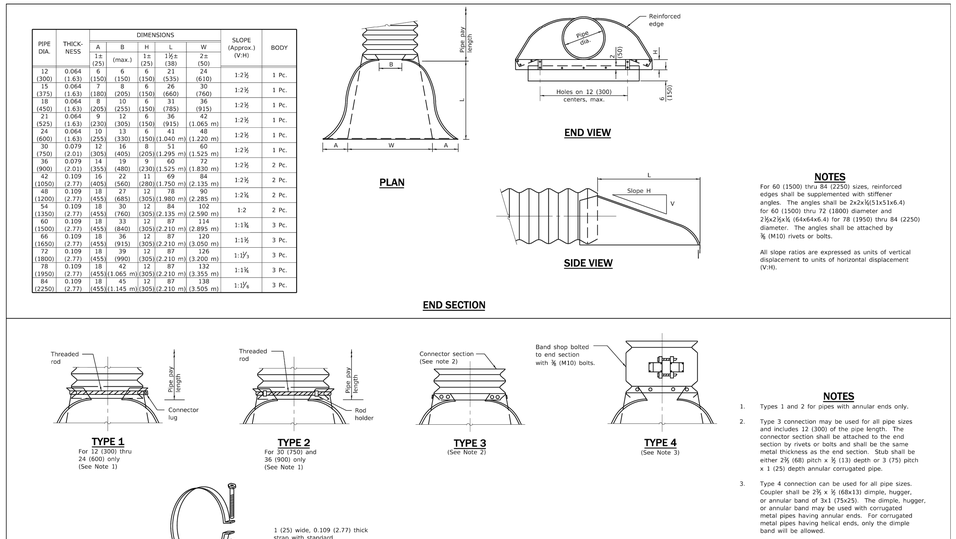

PIPE DIA.	THICK-NESS	DIMENSIONS A ± (25)	B (max.)	H ± (25)	L ± (38)	W ± (50)	SLOPE (Approx.) (V:H)	BODY
12 (300)	0.064 (1.63)	6 (150)	6 (150)	6 (150)	21 (535)	24 (610)	1:2½	1 Pc.
15 (375)	0.064 (1.63)	7 (180)	8 (205)	6 (150)	26 (660)	30 (760)	1:2½	1 Pc.
18 (450)	0.064 (1.63)	8 (205)	10 (255)	6 (150)	31 (785)	36 (915)	1:2½	1 Pc.
21 (525)	0.064 (1.63)	9 (230)	12 (305)	6 (150)	36 (915)	42 (1.065 m)	1:2½	1 Pc.
24 (600)	0.064 (1.63)	10 (255)	13 (330)	6 (150)	41 (1.040 m)	48 (1.220 m)	1:2½	1 Pc.
30 (750)	0.079 (2.01)	12 (305)	16 (405)	8 (205)	51 (1.295 m)	60 (1.525 m)	1:2½	1 Pc.
36 (900)	0.079 (2.01)	14 (355)	19 (480)	9 (230)	60 (1.525 m)	72 (1.830 m)	1:2½	2 Pc.
42 (1050)	0.109 (2.77)	16 (405)	22 (560)	11 (280)	69 (1.750 m)	84 (2.135 m)	1:2½	2 Pc.
48 (1200)	0.109 (2.77)	18 (455)	27 (685)	12 (305)	78 (1.980 m)	90 (2.285 m)	1:2¾	2 Pc.
54 (1350)	0.109 (2.77)	18 (455)	30 (760)	12 (305)	84 (2.135 m)	102 (2.590 m)	1:2	2 Pc.
60 (1500)	0.109 (2.77)	18 (455)	33 (840)	12 (305)	87 (2.210 m)	114 (2.895 m)	1:1¾	3 Pc.
66 (1650)	0.109 (2.77)	18 (455)	36 (915)	12 (305)	87 (2.210 m)	120 (3.050 m)	1:1½	3 Pc.
72 (1800)	0.109 (2.77)	18 (455)	39 (990)	12 (305)	87 (2.210 m)	126 (3.200 m)	1:1⅜	3 Pc.
78 (1950)	0.109 (2.77)	18 (455)	42 (1.065 m)	12 (305)	87 (2.210 m)	132 (3.355 m)	1:1¼	3 Pc.
84 (2250)	0.109 (2.77)	18 (455)	45 (1.145 m)	12 (305)	87 (2.210 m)	138 (3.505 m)	1:1⅛	3 Pc.

END SECTION

END VIEW

PLAN

SIDE VIEW

NOTES

For 60 (1500) thru 84 (2250) sizes, reinforced edges shall be supplemented with stiffener angles. The angles shall be 2x2x¼(51x51x6.4) for 60 (1500) thru 72 (1800) diameter and 2½x2½x¼ (64x64x6.4) for 78 (1950) thru 84 (2250) diameter. The angles shall be attached by ⅜ (M10) rivets or bolts.

All slope ratios are expressed as units of vertical displacement to units of horizontal displacement (V:H).

NOTES

1. Types 1 and 2 for pipes with annular ends only.
2. Type 3 connection may be used for all pipe sizes and includes 12 (300) of the pipe length. The connector section shall be attached to the end section by rivets or bolts and shall be the same metal thickness as the end section. Stub shall be either 2½ (68) pitch x ½ (13) depth or 3 (75) pitch x 1 (25) depth annular corrugated pipe.
3. Type 4 connection can be used for all pipe sizes. Coupler shall be 2⅔ x ⅝ (68x13) dimple, hugger, or annular band of 3x1 (75x25). The dimple, hugger, or annular band may be used with corrugated metal pipes having annular ends. For corrugated metal pipes having helical ends, only the dimple band will be allowed.

All dimensions are in inches (millimeters) unless otherwise shown.

CONNECTIONS OF END SECTIONS

Illinois Department of Transportation
PASSED January 1, 2021 — ENGINEER OF POLICY AND PROCEDURES
APPROVED January 1, 2021 — ENGINEER OF DESIGN AND ENVIRONMENT
DISKS 1 EA

DATE	REVISIONS
1-1-21	Revised THICKNESS values in table.
1-1-18	Renamed standard.

METAL FLARED END SECTION FOR PIPE CULVERTS

STANDARD 542401-04

4 Flared End Section (Not to Scale)

RVi
22 East Chicago Avenue
Suite 200a
Naperville, IL 60540
Tel: 312.634.2100
www.rvilanning.com

PREPARED FOR

CITY OF LAKE FOREST

800 N. FIELD DRIVE
LAKE FOREST, ILLINOIS 60045

CONSULTANTS

CIVIL ENGINEER
HEY AND ASSOCIATES, INC.
26575 W. COMMERCE DRIVE
SUITE 601
VOLO, ILLINOIS 60073
T 847.740.0888

ELECTRICAL ENGINEER
NOVA ENGINEERING, PC
2338 S. CLINE AVENUE
SCHERERVILLE, INDIANA 46375
T 219.865.3352

SOUTH PARK PHASE TWO

ISSUE FOR BID
150 S. MAYWOOD RD.
LAKE FOREST, ILLINOIS 60045

PROJECT NO: 26000793
DATE: 10/28/2026
DRAWN: BCB/BEG
REVIEWED: CTM

OCTOBER 28, 2026
REVISIONS:

NO.	DATE	ISSUE

CIVIL DETAILS

C4.2

01_ORIGINAL ISSUE

E:\Projects\26-0075 RVI - South Park Improvements\05 CAD\26-0075 RVI South Park.dwg 10/27/2026 corey mase

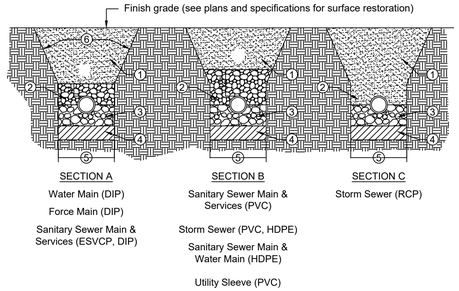

① Trench backfill to subgrade and within 2 feet of proposed pavement, driveway, curb and gutter or sidewalk. Trench backfill materials shalll be IDOT approved gradation:
- FA 1, FA 2, FA 6 or FA 21
- CA 6, CA 10 or CA 18

Compacted to 90% of modified proctor density.
In non-structural areas backfill with approved excavated materials.

② Initial backfill to depth as indicated. Material shall be IDOT approved gradation:
- FA 6
- CA 6, CA 7 or CA 11

③ Pipe bedding shall be fractured granular material IDOT gradation CA-7 or CA-11 from 4 inches below horizontal center of pipe

④ Unsuitable material to be removed where directed by the Engineer and replaced with compacted suitable material.

⑤ Trench Width:
- Pipe O.D. + 12 inches min. (for payment purposes)
- Pipe I.D. + 18 inches max. (for payment purposes)
- Or as noted in Standard Specifications for Water and Sewer Main Construction in Illinois

⑥ Contractors shall comply with the latest OSHA standards including, but not limited to:
- Sloping and benching trenching walls
- Trench support and shoring systems
- Shield sytems and Hazardous atmospheres.

1 Typical Trench Detail (Not to Scale)

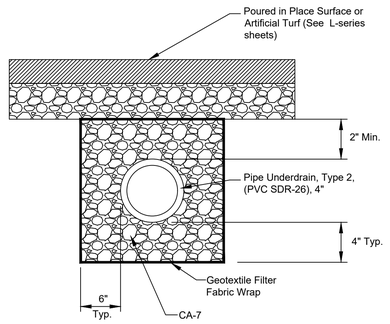

Note:
Underdrain and CA-7 aggregate shall not be installed until upstream areas have been stabilized. Contractor shall prevent sediment and debris from contaminating the CA-7.

2 Pipe Underdrain (PIP Surfacing and Artificial Turf) Detail (Not to Scale)

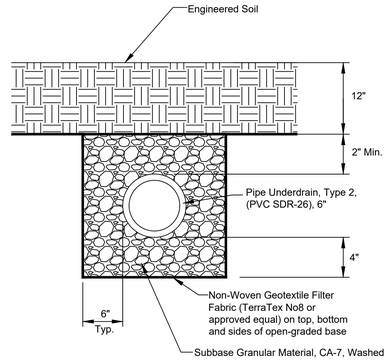

Note:
Engineered soil mix, underdrain and CA-7 aggregate shall not be installed until upstream areas have been stabilized. Contractor shall prevent sediment and debris from contaminating the engineered soil and CA-7.

3 Pipe Underdrain (Rain Garden) Detail (Not to Scale)

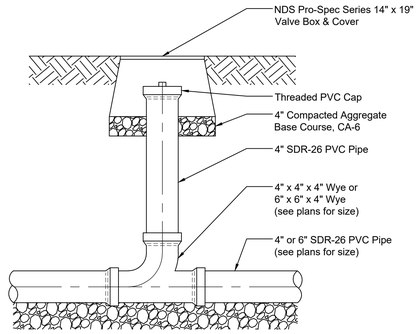

4 Underdrain Cleanout (Not to Scale)

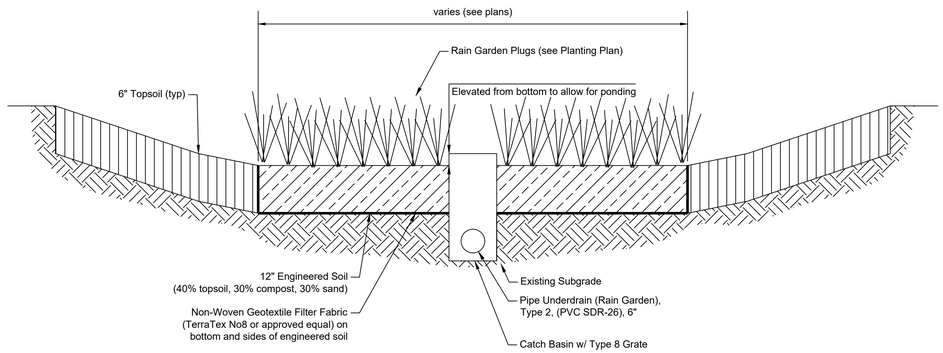

Notes:
1. Contractor shall till or disc subgrade before placing engineered soil in order to promote infiltration.
2. Engineered soil mix, underdrain and CA-7 aggregate shall not be installed until upstream areas have been stabilized. Contractor shall prevent sediment and debris from contaminating the engineered soil and CA-7 .

5 Rain Garden Detail (Not to Scale)

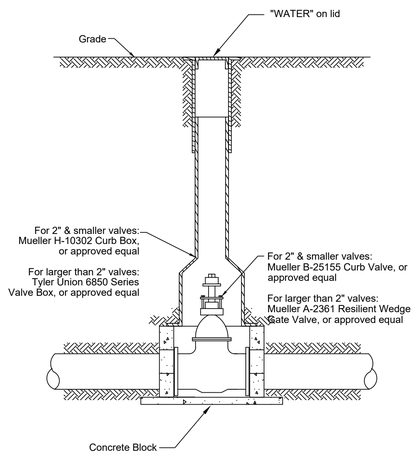

6 Typical Valve Box Installation Detail (Not to Scale)

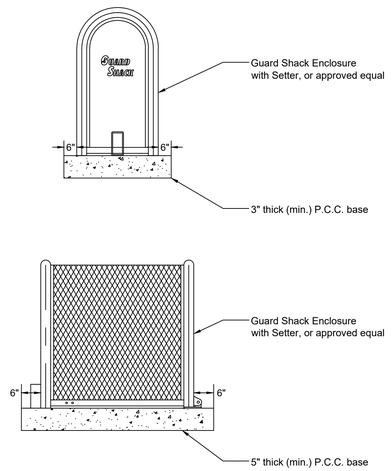

Notes:

1. RPZ enclosure shall be Guard Shack model HGS-3 with ES-3 Setter, or approved equal.
2. Contractor to confirm sizes to fit necessary plumbing.

7 RPZ Enclosure Detail (Not to Scale)

RVi
22 East Chicago Avenue
Suite 200a
Naperville, IL 60540
Tel: 312.634.2100
www.rviplanning.com

PREPARED FOR

CITY OF LAKE FOREST

800 N. FIELD DRIVE
LAKE FOREST, ILLINOIS 60045

CONSULTANTS

CIVIL ENGINEER
HEY AND ASSOCIATES, INC.
26575 W. COMMERCE DRIVE
SUITE 601
VOLO, ILLINOIS 60073
T 847.740.0888

ELECTRICAL ENGINEER
NOVA ENGINEERING, PC
2338 S. CLINE AVENUE
SCHERERVILLE, INDIANA 46375
T 219.865.3352

SOUTH PARK PHASE TWO

ISSUE FOR BID
150 S. MAYWOOD RD.
LAKE FOREST, ILLINOIS 60045

PROJECT NO:	26000793
DATE:	10/28/2026
DRAWN:	BCB/BEG
REVIEWED:	CTM

OCTOBER 28, 2026

REVISIONS:

NO.	DATE	ISSUE

CIVIL DETAILS

C4.3

01_ORIGINAL ISSUE

E:\Projects\26-0075 RVI - South Park Improvements\05 CAD\26-0075 RVI South Park.dwg 10/27/2026 corey mase

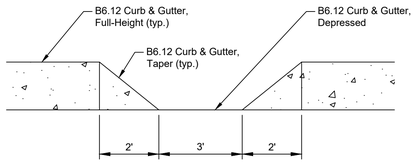

1 Curb Outlet Detail
(Not to Scale)

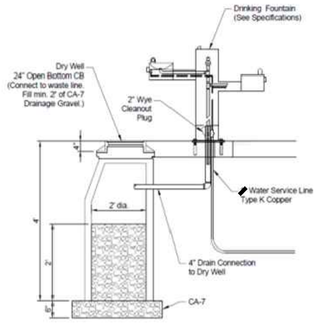

2 Drinking Fountain Drain Detail
(Not to Scale)

RVi
22 East Chicago Avenue
Suite 200a
Naperville, IL 60540
Tel: 312.634.2100
www.rviplanning.com

PREPARED FOR

CITY OF LAKE FOREST

800 N. FIELD DRIVE
LAKE FOREST, ILLINOIS 60045

CONSULTANTS

CIVIL ENGINEER
HEY AND ASSOCIATES, INC.
26575 W. COMMERCE DRIVE
SUITE 601
VOLO, ILLINOIS 60073
T 847.740.0888

ELECTRICAL ENGINEER
NOVA ENGINEERING, PC
2338 S. CLINE AVENUE
SCHERERVILLE, INDIANA 46375
T 219.865.3352

SOUTH PARK PHASE TWO

ISSUE FOR BID

150 S. MAYWOOD RD.
LAKE FOREST, ILLINOIS 60045

PROJECT NO:	26000793
DATE:	10/28/2026
DRAWN:	BCB/BEG
REVIEWED:	CTM

OCTOBER 28, 2026

REVISIONS:

NO.	DATE	ISSUE

CIVIL DETAILS

C4.4

01_ORIGINAL ISSUE

E:\Projects\26-0075 RVI - South Park Improvements\05 CAD\26-0075 RVI South Park.dwg 10/27/2026 corey mase

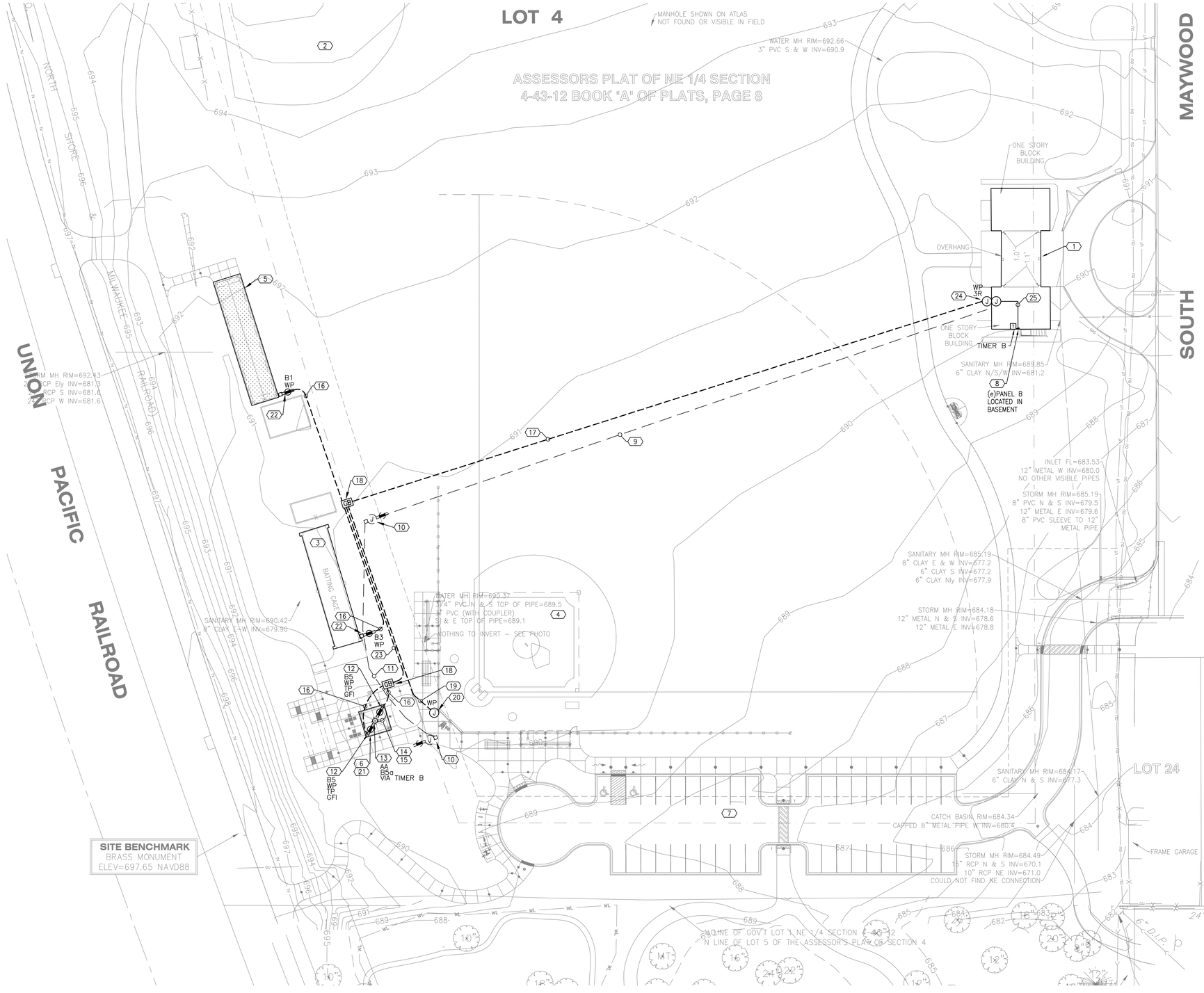

SHEET NOTES (X)

1. EXISTING PICNIC PAVILION.
2. EXISTING BALLFIELD.
3. EXISTING BATTING CAGES
4. RENOVATED BALLFIELD.
5. PROPOSED NEW BATTING CAGES.
6. PROPOSED NEW SHELTER STRUCTURE.
7. PROPOSED NEW PARKING LOT.
8. EXISTING PANEL B IN BASEMENT TO REMAIN.
9. REMOVE EXISTING WIRE. EXISTING UNDERGROUND CONDUIT TO BE TERMINATED BELOW GRADE AND ABANDON IN PLACE.
10. REMOVE EXISTING PEDESTAL, JUNCTION BOX AND RECEPTACLE COMPLETE AS REQUIRED.
11. REMOVE EXISTING CONDUIT AND WIRE COMPLETE AS REQUIRED.
12. FURNISH AND INSTALL GFCI RECEPTACLE FLUSH IN COLUMN WITH LOCKABLE IN-USE COVER. FURNISH AND INSTALL HUBBELL #WP26E SERIES COVER. RECEPTACLE SHALL BE MOUNTED 18" ABOVE FINISHED FLOOR. E.C TO COORDINATE CONDUIT PLACEMENT IN FOUNDATION TO MATCH LOCATION OF OPENING IN COLUMN BASE PLATE WITH SHELTER PROVIDER PRIOR TO ROUGH-IN. COORDINATE CUTOUT IN COLUMN AND CONDUIT ROUTING WITH SHELTER PROVIDER. VERIFY EXACT LOCATION AND CONDUIT ROUTING WITH LANDSCAPE ARCHITECT.
13. FURNISH AND INSTALL LIGHT FIXTURE. FURNISH AND INSTALL ALL REQUIRED HARDWARE TO MOUNT FIXTURE TO UNDERSIDE OF SHELTER. SURFACE MOUNT FIXTURE TO SHELTER.
14. CONDUIT ROUTED UP THRU COLUMN TO LIGHT FIXTURE.
15. 3/4"C-2#10+1#10 GRD.
16. 1"C-2#6+1#6 GRD.
17. 3"C-7#6+1#6 GRD WITH PULL ROPE. CONNECT TO EXISTING PANEL B. ELECTRICAL CONTRACTOR TO DIRECT BORE. SHELTER LIGHT VIA TIMER B.
18. FURNISH AND INSTALL (GB) NON-METALLIC IN-GRADE JUNCTION BOX SIZE AS REQUIRED. COORDINATE EXACT LOCATION WITH LANDSCAPE ARCHITECT PRIOR TO ROUGH-IN. SEE DETAIL ON SHEET E3.0.
19. FURNISH AND INSTALL 1" EMPTY CONDUIT WITH PULL ROPE FOR FUTURE.
20. FURNISH AND INSTALL WP 6"x6"x4" JUNCTION BOX FOR FUTURE. ANCHOR TO BACKSTOP POST COMPLETE AS REQUIRED. VERIFY EXACT LOCATION WITH LANDSCAPE ARCHITECT/CITY OF LAKE FOREST PRIOR TO ROUGH-IN. SEE DETAIL ON SHEET E3.0.
21. ELECTRICAL CONTRACTOR SHALL USE THE COLUMN(S)/STRUCTURE FOR THE SHELTER LIGHTING AND RECEPTACLE POWER FEED(S). COORDINATE CONDUIT PLACEMENT WITH ALL TRADES. PROVIDE SEALTIGHT RACEWAY THRU COLUMN UP TO JUNCTION BOX IN STRUCTURE FOR DISTRIBUTION TO LIGHT FIXTURES. COORDINATE OPENINGS IN COLUMN FOR SEAL TIGHT RACEWAY WITH SHELTER MANUFACTURER PRIOR TO INSTALLATION. COORDINATE ALL REQUIRED OPENINGS WITH SHELTER MANUFACTURER PRIOR TO FABRICATION.
22. FURNISH AND INSTALL GFCI TAMPER AND WEATHER RESISTANT RECEPTACLE WITH LOCKABLE IN-USE COVER (BASEBALL PITCHING MACHINE). COVER SHALL BE HUBBELL #WP262E SERIES. MOUNT RECEPTACLE 18" ABOVE FINISH GRADE ON 4"X4" PRESSURE TREATED WOOD POST. SEE DETAIL ON SHEET E3.0. VERIFY EXACT LOCATION AT BATTING CAGES WITH OWNER/LANDSCAPE ARCHITECT PRIOR TO INSTALLATION.
23. 1"C-3#6+1#6 GRD.
24. PROVIDE NEW PULL/JUNCTION BOXES. SIZE AND TYPE AS REQUIRED BY CODE AND DOUBLE CAPACITY FOR FUTURE. 3" CONDUIT BETWEEN BOXES.
25. 1 1/2"C-7#6+1#6 ROUTED EXPOSED THRU BASEMENT TO PANEL B. SHELTER LIGHT VIA TIMER B.

GENERAL NOTES (APPLIES TO ALL SHEETS)

A. THIS DRAWING DOES NOT PURPORT TO SHOW ALL ELECTRICAL DEVICES, ETC. CONTRACTOR SHALL FIELD VERIFY ALL EXISTING CONDITIONS AND BE RESPONSIBLE FOR ALL REQUIRED ELECTRICAL DEMOLITION WORK. CONTRACTOR SHALL ALSO FIELD VERIFY ALL CONDUITS, CABLES, ETC. THAT ARE PASSING THROUGH THIS AREA AND SERVE ADJACENT AREAS THAT ARE REQUIRED TO REMAIN.

B. CONTRACTOR SHALL BE RESPONSIBLE FOR COORDINATING ALL NEW WORK WITH EXISTING CONDITIONS.

C. CONDUIT ROUTING IS DIAGRAMMATIC. CONTRACTOR SHALL FIELD VERIFY EXISTING CONDITIONS AND ADJUST AS REQUIRED.

D. CONTRACTOR SHALL BE AWARE OF POSSIBLE CONFLICTS BETWEEN NEW AND EXISTING UTILITIES AND COORDINATE AS REQUIRED. PROTECT ALL EXISTING UTILITIES AS REQUIRED DURING CONSTRUCTION. CONTRACTOR SHALL BE RESPONSIBLE FOR LOCATING ALL EXISTING UTILITIES BEFORE BEGINNING WORK. ANY UTILITIES DAMAGED BY CONTRACTOR SHALL BE REPAIRED BY CONTRACTOR TO OWNERS SATISFACTION.

E. ALL DAMAGED AND DIRTIED CONCRETE SIDEWALKS, ASPHALT, STAIRS, PAVERS, ETC., DISTURBED DURING CONSTRUCTION SHALL BE RESTORED TO ORIGINAL CONDITION BY THE CONTRACTOR.

F. ELECTRICAL CONTRACTOR SHALL COORDINATE ACCESS/CUTOUT LOCATIONS REQUIRED FOR RECEPTACLE, JUNCTION BOXES AND LIGHTING LOCATIONS WITH THE SHELTER MANUFACTURER AND LANDSCAPE ARCHITECT.

G. ALL ELECTRICAL WIRING SHALL BE IN ACCORDANCE WITH THE NATIONAL ELECTRICAL CODE AND LOCAL AMENDMENTS IN EFFECT AT THE TIME OF CONSTRUCTION.

H. ELECTRICAL CONTRACTOR SHALL PROVIDE SEAL TIGHT RACEWAY FOR ALL SHELTER LIGHTING AND RECEPTACLES. CONDUIT/ SEAL TIGHT RACEWAY FOR LIGHTING AND RECEPTACLES SHALL BE CONCEALED IN SHELTER STRUCTURE.

I. CONTRACTOR SHALL BE RESPONSIBLE FOR OBTAINING ELECTRICAL PERMIT AND COORDINATING SITE INSPECTIONS THOUGH THE CITY OF LAKE FOREST.

J. SEE SPLASH PAD DRAWINGS ETC. FOR ADDITIONAL WORK REQUIRED BY THE ELECTRICAL CONTRACTOR FOR THE SPLASH PAD EQUIPMENT. VERIFY MANUFACTURER, MODEL NUMBER, STYLE, COLOR, ACCESSORIES, OPTIONS, ETC. WITH LANDSCAPE ARCHITECT & G.C. PRIOR TO ORDERING, ROUGH-IN, OR INSTALLATION. COORDINATE LOCATION AND INSTALLATION WITH SPLASH PAD EQUIPMENT SUPPLIER.

K. SEE SHELTER STRUCTURE DRAWINGS ETC. FOR ADDITIONAL WORK REQUIRED BY THE ELECTRICAL CONTRACTOR FOR THE SHELTER. VERIFY MANUFACTURER, MODEL NUMBER, STYLE, COLOR, ACCESSORIES, OPTIONS, ETC. WITH ARCHITECT & G.C. PRIOR TO ORDERING, ROUGH-IN, OR INSTALLATION. COORDINATE LOCATION AND INSTALLATION WITH SHELTER STRUCTURE SUPPLIER.

LEGEND

(X) DENOTES SHEET NOTE TAG

RVi
22 East Chicago Avenue
Suite 200a
Naperville, IL 60540
Tel: 312.634.2100
www.rviplanning.com

PREPARED FOR
CITY OF LAKE FOREST
800 N. FIELD DRIVE
LAKE FOREST, ILLINOIS 60045

CONSULTANTS

CIVIL ENGINEER
HEY AND ASSOCIATES, INC.
26575 W. COMMERCE DRIVE
SUITE 601
VOLO, ILLINOIS 60073
T 847.740.0888

ELECTRICAL ENGINEER
NOVA ENGINEERING, PC
2338 S. CLINE AVENUE
SCHERERVILLE, INDIANA 46375
T 219.865.3352

SOUTH PARK PHASE TWO

ISSUE FOR BID
150 S. MAYWOOD RD.
LAKE FOREST, ILLINOIS 60045

PROJECT NO:	26000793
DATE:	10/28/2026
DRAWN:	RB
REVIEWED:	MZ

October 28, 2026
REVISIONS:

NO.	DATE	ISSUE

Electrical Partial Site Plan

E1.0

01_ORIGINAL ISSUE

L:\RVi - Previous HD\GR\V011 - South Park - Lake Forest_Autocad (Working Drawings)_RV011 - E1.0, E2.0 SITE PLAN.dwg 10/20/2026 randyb

SHEET NOTES (X)

1. EXISTING PICNIC PAVILION.
2. EXISTING BALLFIELD.
3. EXISTING PARKING LOT.
4. EXISTING PLAYGROUND.
5. EXISTING BASKETBALL COURT.
6. EXISTING PICKLEBALL COURTS.
7. PROPOSED SPLASH PAD. SEE BONDING DETAIL ON SHEET E3.0. NO POWER REQUIRED FOR SPLASH PAD – BATTERY OPERATED CONTROL.
8. PROPOSED NEW PLAY AREA.

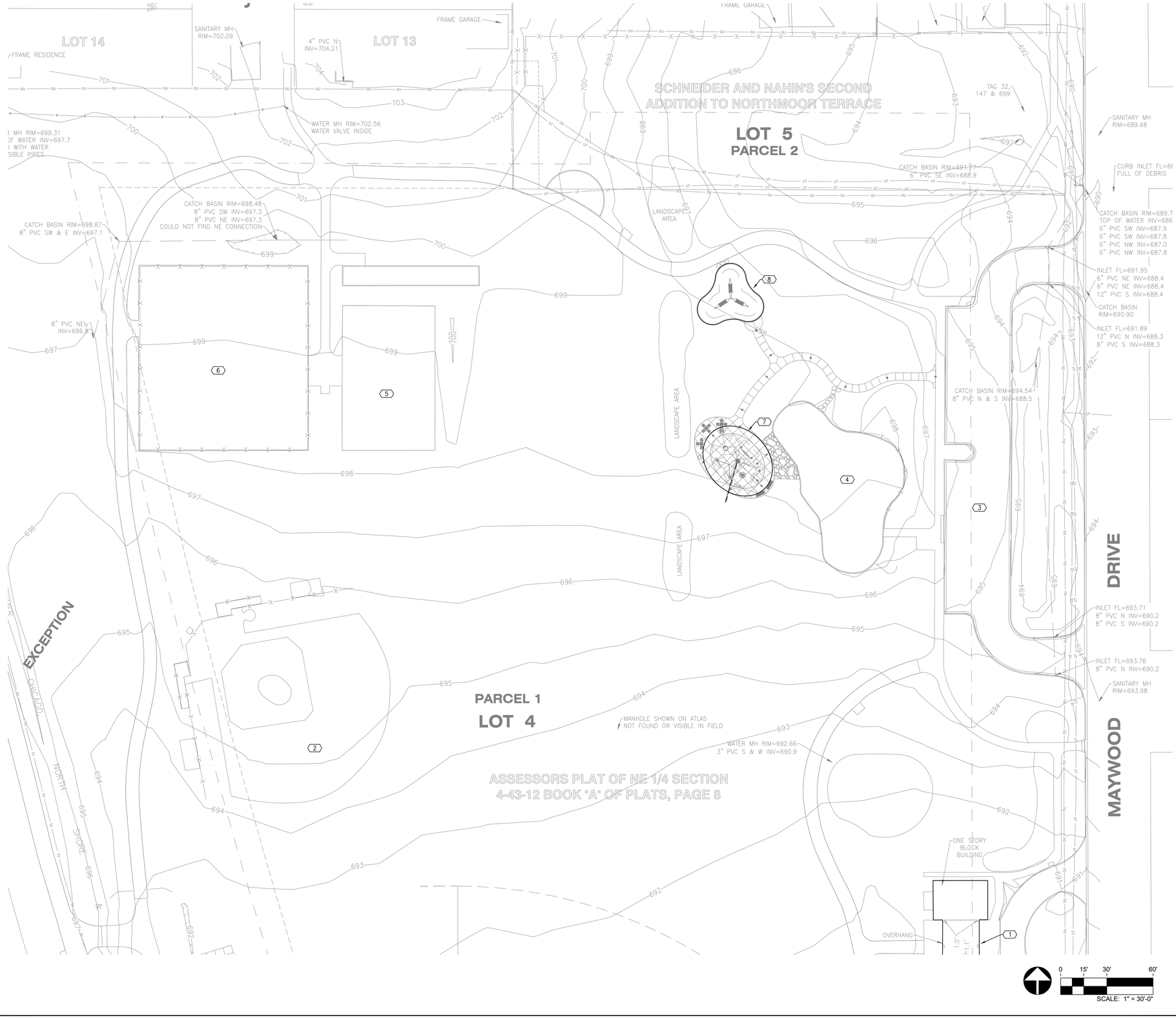

RVi
22 East Chicago Avenue
Suite 200a
Naperville, IL 60540
Tel: 312.634.2100
www.rviplanning.com

PREPARED FOR

CITY OF LAKE FOREST

800 N. FIELD DRIVE
LAKE FOREST, ILLINOIS 60045

CONSULTANTS

CIVIL ENGINEER
HEY AND ASSOCIATES, INC.
26575 W. COMMERCE DRIVE
SUITE 601
VOLO, ILLINOIS 60073
T 847.740.0888

ELECTRICAL ENGINEER
NOVA ENGINEERING, PC
2338 S. CLINE AVENUE
SCHERERVILLE, INDIANA 46375
T 219.865.3352

SOUTH PARK PHASE TWO

ISSUE FOR BID

150 S. MAYWOOD RD.
LAKE FOREST, ILLINOIS 60045

PROJECT NO:	26000793
DATE:	10/28/2026
DRAWN:	RB
REVIEWED:	MZ

October 28, 2026
REVISIONS:

NO.	DATE	ISSUE

Electrical
Partial
Site Plan

E2.0

01_ORIGINAL ISSUE

L:\RVi - Previous HDG\RV\011 - South Park - Lake Forest_Autocad (Working Drawings)_RV\011 - E1.0, E2.0 SITE PLAN.dwg 10/29/2026 randyb

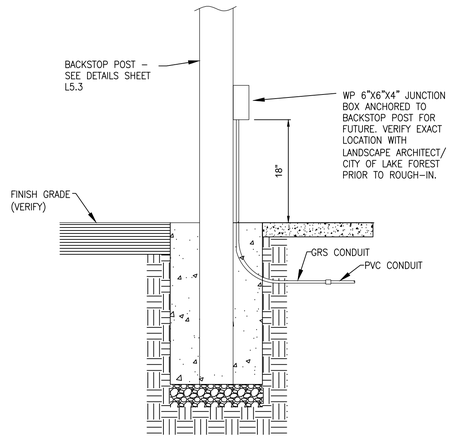

1 | JUCTION BOX @ BACKSTOP DETAIL

SCALE: NONE

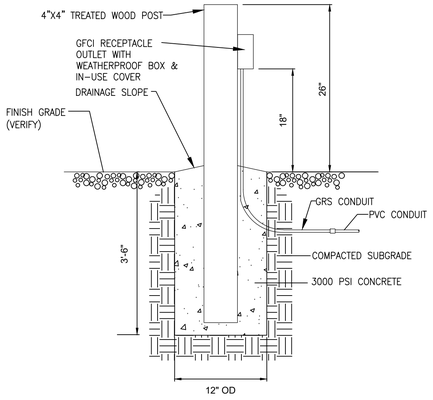

3 | POST DETAIL

SCALE: NONE

PANELBOARD EXISTING PANEL B - LOCATED IN BASEMENT
VOLTAGE: 240/120V, 1 PHASE, 3 WIRE
MAIN:
MOUNTING: SURFACE

CKT NO.	LOAD DESCRIPTION EXISTING USE	LOAD DESCRIPTION NEW USE	C/B	LOAD VA L1	LOAD VA L2
1	SPACE	**RECEPTACLE - BATTING CAGE**	**• 20A/1P**	**180**	
3	SPACE	**RECEPTACLE - BATTING CAGE**	**• 20A/1P**		**180**
5	SPACE	**RECEPTACLE & LIGHT SHELTER**	**• 20A/1P**	**388**	
7	SPACE	**TIMER B**	**• 20A/1P**		**100**
2	SUMP PUMP			-	
4	SPACE				-
6	SPACE			-	
8	SPACE				-

* DENOTES PROVIDE CIRCUIT BREAKER AS INDICATED

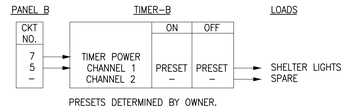

PRESETS DETERMINED BY OWNER.

6 | TIMER - B

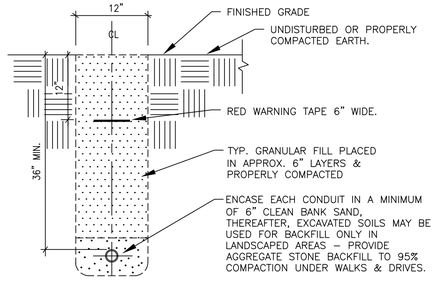

4 | CONDUIT TRENCH DETAIL

NO SCALE

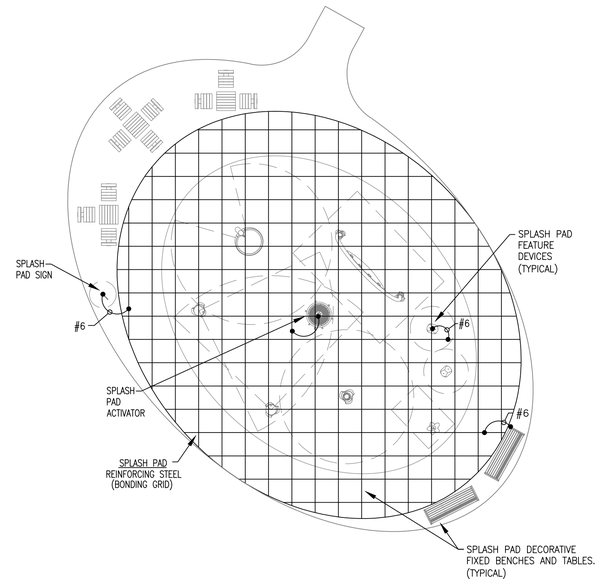

SPLASH PAD BONDING NOTES

1. VERIFY EXACT SPLASH PAD BONDING REQUIREMENTS WITH SUPPLIER.
2. VERIFY EXACT QUANTITY OF SPLASH PAD DEVICES WITH SUPPLIER.
3. GROUND CONCRETE MESH.
4. SEE SPLASH PAD SUPPLIER EQUIPMENT DRAWINGS FOR COMPLETE CONNECTION REQUIREMENTS REQUIRED BY THE ELECTRICAL CONTRACTOR FOR THE SPLASH PAD. VERIFY MANUFACTURER, MODEL NUMBER, STYLE, COLOR, ACCESSORIES, OPTIONS, ETC. WITH ARCHITECT & G.C. PRIOR TO ORDERING, ROUGH-IN, OR INSTALLATION. COORDINATE LOCATION AND INSTALLATION WITH SPLASH PAD EQUIPMENT SUPPLIER.
5. PROVIDE COMPLETE EQUIPOTENTIAL BONDING PER NATIONAL ELECTRICAL CODE ARTICLE 680.26. CONNECT ALL METAL PARTS TO A COMMON BONDING GRID (WATER FEATURE REINFORCING STEEL) TO ENSURE THAT ALL SUCH METAL PARTS ARE AT THE SAME ELECTRICAL POTENTIAL. PROVIDE MINIMUM #6 SOLID COPPER BONDING CONDUCTOR AND LISTED PRESSURE OR EXOTHERMIC CONNECTIONS. CONNECT WATER FEATURE DECK REINFORCEMENT TO A MINIMUM OF 4 FEET BEYOND EDGE OF WATER FEATURE. BOND ALL WATER FEATURE REINFORCING STEEL, MECHANICAL EQUIPMENT, PUMPS, TANKS, DECK EQUIPMENT, ACTIVITIES AND ANY OTHER EMBEDDED METAL STRUCTURES.
6. ALL METAL FITTINGS WITHIN OR ATTACHED TO THE SPLASH PAD STRUCTURE SHALL BE BONDED. ISOLATED PARTS THAT ARE NOT OVER 4 INCHES IN ANY DIMENSION AND DO NOT PENETRATE THE SPLASH PAD STRUCTURE MORE THAN ONE INCH SHALL NOT REQUIRE BONDING. ARTICLE 680.26(B)(5).

7 | SPLASH PAD BONDING DIAGRAM

SCALE: NONE

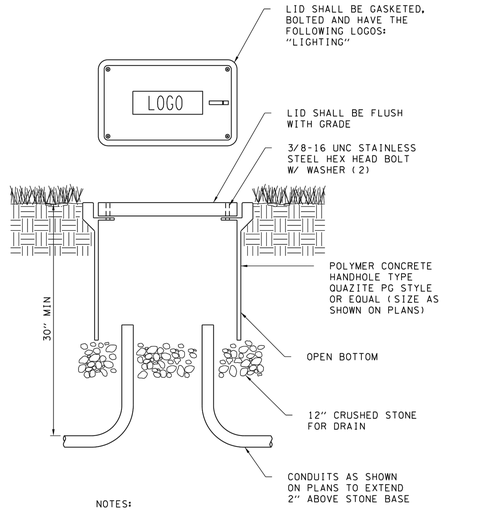

NOTES:

1. ALL SPLICES SHALL BE WATERPROOF. SEE SPLICING DETAIL.
2. POLYMER CONCRETE HANDHOLE AND LID SHALL BE GREY.
3. BOX & LID SHALL MEET/EXCEED ANSI TIER 15 LOADING REQUIREMENTS REQUIREMENTS AND BE TESTED IN ACCCORDANCE WITH THE LATEST EDITION OF THE ANSI/SCTE 77 "SPECIFICATIONS FOR UNDERGROUND ENCLOSURE INTEGITRY", AND THE PROVISIONS OF PARAGRAPHS 5.2.3 AND 5.2.4 OF WESTER UNDERGROUND COMMITTE GUIDE 3.6.

2 | IN-GRADE JUNCTION BOX DETAIL

NO SCALE

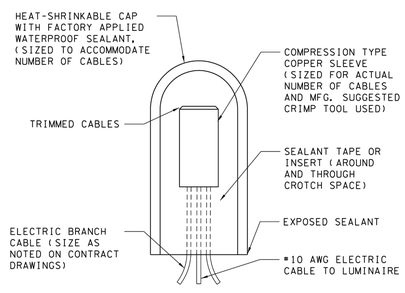

5 | ELECTRIC SPLICE CABLE DETAIL

NO SCALE

RVi
22 East Chicago Avenue
Suite 200a
Naperville, IL 60540
Tel: 312.634.2100
www.rviplanning.com

PREPARED FOR

CITY OF LAKE FOREST

800 N. FIELD DRIVE
LAKE FOREST, ILLINOIS 60045

CONSULTANTS

CIVIL ENGINEER
HEY AND ASSOCIATES, INC.
26575 W. COMMERCE DRIVE
SUITE 601
VOLO, ILLINOIS 60073
T 847.740.0888

ELECTRICAL ENGINEER
NOVA ENGINEERING, PC
2338 S. CLINE AVENUE
SCHERERVILLE, INDIANA 46375
T 219.865.3352

SOUTH PARK PHASE TWO

ISSUE FOR BID
150 S. MAYWOOD RD.
LAKE FOREST, ILLINOIS 60045

PROJECT NO:	26000793
DATE:	10/28/2026
DRAWN:	RB
REVIEWED:	MZ

October 28, 2026
REVISIONS:

NO.	DATE	ISSUE

Electrical Detials

E3.0

01_ORIGINAL ISSUE

L:\RVi - Previous HD\GRV\011 - South Park - Lake Forest_Autocad (Working Drawings)_RV\011 - E4.0 SCHEDULES.dwg 10/19/2026 randyb

SITE ELECTRICAL SPECIFICATIONS

GENERAL
1. THE CONTRACTOR SHALL FURNISH ALL LABOR AND MATERIALS NECESSARY TO PROVIDE A COMPLETE INSTALLATION OF THE SYSTEMS INDICATED ON THE DRAWINGS AND IN THE SPECIFICATIONS.
2. ALL WORK SHALL BE PERFORMED IN A WORKMANLIKE MANNER AND COMPLY WITH ALL APPLICABLE LOCAL, STATE AND NATIONAL CODES AND ORDINANCES AND THE REQUIREMENTS OF THE LOCAL UTILITY COMPANY. ALL EQUIPMENT SHALL BE U.L. (OR OTHER NATIONALLY RECOGNIZED TESTING COMPANY) LISTED.
3. ALL DRAWINGS ARE DIAGRAMMATIC IN NATURE. CONTRACTOR SHALL INSTALL SYSTEMS TO MEET FIELD CONDITIONS. CONTRACTOR SHALL COORDINATE ALL WORK WITH RESPECTIVE TRADES, AND VERIFY LOCATIONS FROM THE ARCHITECTURAL DRAWINGS, SUPPLIER DRAWINGS, AND FIELD DIMENSIONS.
4. CONTRACTOR SHALL VISIT THE SITE TO DETERMINE THE FULL EXTENT OF THE WORK AND THE WORKING CONDITIONS.
5. THE DRAWINGS AND SPECIFICATIONS HAVE BEEN DEVELOPED FOR ONE (1) PRIME CONTRACTOR. THEY ARE NOT INTENDED TO DIVIDE THE WORK BETWEEN CONTRACTORS. COORDINATE INTERFACES WITH GENERAL CONTRACTOR.
6. ARRANGE AND PAY FOR ALL COST CHARGEABLE TO THE OWNER BY UTILITY COMPANIES FOR ELECTRICAL SERVICES FOR THE PROJECT INCLUDING TELEPHONE AND ELECTRICAL SERVICE.
7. CONTRACTOR SHALL VERIFY ALL ELECTRICAL REQUIREMENTS FOR THE FOLLOWING EQUIPMENT WITH THE ASSOCIATED VENDOR AND/OR CONTRACTOR AND THE AUTHORITY HAVING JURISIDICTION (AHJ) PRIOR TO ORDERING EQUIPMENT AND ROUGH-IN:
   A. SHELTER STRUCTURE
   B. SPLASH PAD EQUIPMENT

PERMITS
OBTAIN AND PAY FOR ALL LICENSES, PERMITS AND INSPECTIONS FOR ALL WORK COVERED BY THIS CONTRACT. ALL CERTIFICATES OF INSPECTION SHALL BE DELIVERED TO THE OWNER.

CONSTRUCTION POWER
PROVIDE TEMPORARY POWER AND LIGHTING FOR THE JOB SITE DURING CONSTRUCTION.

ELECTRICAL TIE-INS
COORDINATE WITH THE BUILDING OWNER FOR THE FURNISHING OF ELECTRICAL POWER FOR THE PROJECT

OPENINGS
1. PROVIDE ALL REQUIRED OPENINGS THROUGH WALLS, CEILINGS AND FLOORS. ALL DISTURBED SURFACES OR FINISHES MUST BE REPLACED OR REPAIRED TO THE ARCHITECT'S SATISFACTION.
2. FIRE SEAL ALL PENETRATIONS THROUGH FIRE RATED WALLS.

CONDUIT
1. ALL ELECTRICAL WORK SHALL BE INSTALLED IN A METAL CONDUIT SYSTEM, INCLUDING LOW VOLTAGE WIRING.
2. SERVICE ENTRANCE CONDUIT, EXTERIOR CONDUIT AND CONDUIT EXPOSED TO WEATHER AND SHALL BE RIGID GALVANIZED STEEL.
3. CONDUIT IN WET LOCATIONS SHALL BE RIGID GALVANIZED STEEL
4. UNDERGROUND FEEDER AND UNDERGROUND BRANCH CONDUITS SHALL BE RIGID GALVANIZED STEEL OR SCHEDULE 40 PVC AS PERMITTED BY CODE. RIGID GALVANIZED STEEL CONDUIT SHALL BE USED FOR MAKING FINAL TURNS OUT OF EQUIPMENT PADS AND FINISHED FLOOR. EXTERIOR UNDERGROUND CONDUITS SHALL BE INSTALLED 36" BELOW GRADE. CONDUIT BELOW CONCRETE FLOOR SLAB SHALL BE A MINIMUM OF 6" BELOW BOTTOM OF SLAB.
5. ALL CONDUIT IN DRY LOCATIONS SHALL BE EMT.
6. MINIMUM SIZE CONDUIT ABOVE GRADE SHALL BE 1/2". MINIMUM SIZE CONDUIT BELOW GRADE SHALL BE 3/4".
7. ALL CONDUITS SHALL BE INDEPENDENTLY SUPPORTED. CONDUITS SHALL NOT BE SUPPORTED FROM MECHANICAL SYSTEMS OR CEILING SUSPENSION WIRES.
8. ALL CONDUITS SHALL BE CONCEALED UNLESS SPECIFICALLY NOTED OTHERWISE. WHERE EXPOSED, CONDUITS SHALL BE RUN IN STRAIGHT LINES PARALLEL AND/OR PERPENDICULAR TO BUILDING CONSTRUCTION.

WIRE (120V AND ABOVE):
1. ALL WIRE SHALL BE COPPER WITH 600V INSULATION. CONDUCTORS SHALL BE STRANDED FOR SIZES NO. 8 AWG AND LARGER, SOLID FOR SIZES NO. 10 AWG AND SMALLER.
2. TYPE THWN SHALL BE USED INDOORS NOT INCLUDING SERVICES.
3. TYPE XHHW SHALL BE USED BELOW SLABS, SERVICE ENTRANCES AND EXTERIOR UNDERGROUND WORK, INCLUDING SITE LIGHTING.
4. MINIMUM SIZE SHALL BE #12. RUNS OVER 75' SHALL BE MINIMUM #10 UNLESS NOTED OTHERWISE.

SPLICES AND TERMINATIONS
1. ALL SPLICES AND PIGTAIL CONNECTIONS FOR INDOOR AND DRY LOCATIONS FOR CABLE SIZES NUMBER 10 AWG AND SMALLER SHALL BE MADE UP WITH PREINSULATED SPRING CONNECTORS, 3M COMPANY "SCOTCHLOCK," IDEAL INDUSTRIES, INC., WIRENUTS, OR APPROVED EQUAL. SPLICES FOR CABLE SIZES NUMBER 8 AWG AND LARGER SHALL BE BUTT SPLICE TYPE CONSISTING OF LONG BARREL COPPER ONLY TYPE COMPRESSION CONNECTOR. SPLICE SHALL BE COVERED WITH EITHER A COLD SHRINK CONNECTOR INSULATOR OR HEAT SHRINK CONNECTOR INSULATOR.
2. ALL SPLICES OUTDOORS, ABOVE GRADE, SUCH AS IN LIGHT POLES, SHALL BE A WATERPROOF TWIST CONNECTOR. IDEAL WEATHERPROOF OR EQUAL.
3. ALL SPLICES OUTDOORS BELOW GRADE, SUCH AS IN UNDERGROUND PULL BOXES, SHALL BE MADE USING MOISTURE RESISTANT GEL ENCAPSULATED SPLICE KIT. ACCEPTABLE MANUFACTURERS SHALL BE NSI EASY SPLICE GEL TAP SPLICE OR RAYCHEM GTAP OR GHFC. WATERPROOF WIRE NUT CONNECTORS ARE NOT ACCEPTABLE.

BRANCH WIRING:
1. CONDUITS AND BOXES SHALL BE CONCEALED WHEREVER POSSIBLE.
2. CONNECT EQUIPMENT AND DEVICES TO THE CIRCUITS AND SWITCH LEGS SHOWN.
3. ARCS SHOWN ON DRAWINGS REPRESENT SWITCH ARRANGEMENT ONLY, AND ARE NOT INTENDED TO SHOW CONDUIT ROUTINGS.
4. EACH CIRCUIT SHALL HAVE AN INDEPENDENT NEUTRAL.
5. AMPACITIES OF CONDUCTORS WHEN MORE THAN THREE (3) CURRENT -CARRYING CONDUCTORS ARE PLACED IN A RACEWAY SHALL BE DERATED PER CODE.
6. WHERE WIRE SIZES MUST BE INCREASED TO LIMIT VOLTAGE DROP, CONTRACTOR SHALL COORDINATE TERMINAL SIZES AT TERMINATIONS.

WIRING DEVICES:
1. WIRING DEVICES SHALL BE 20 AMPERE, UL/FED SPEC LISTED, BACK AND SIDE WIRED, WITH COLOR AS SELECTED AND APPROVED BY THE ARCHITECT.
2. PROVIDE COMMON COVER PLATE FOR GANGED DEVICES. COVERS FOR SURFACE MOUNTED BOXES SHALL BE APPROPRIATE FOR THE BOX TYPE.
3. FOR RECEPTACLES IN EXTERIOR LOCATIONS, PROVIDE CAST ALUMINUM WHILE-IN-USE WEATHERPROOF COVERS, HUBBELL #WP26E.
4. VERIFY ALL MOUNTING HEIGHTS WITH ARCHITECT & LATEST ADA REQUIREMENTS PRIOR TO INSTALLATION.
5. CONDUCTORS SHALL BE ATTACHED TO DEVICES BY MEANS OF SCREW TERMINALS OR SCREW CLAMPS.
6. WIRING DEVICES SHALL BE HUBBELL OR PASS & SEYMOUR CONSTRUCTION SERIES.

LIGHTING FIXTURES:
1. FURNISH FIXTURES AND LAMPS AS SPECIFIED IN THE FIXTURE SCHEDULE.
2. PROVIDE ADEQUATE SUPPORT FOR ALL FIXTURES.

TIMER B:
1. TIMER SHALL BE ELECTROMECHANICAL 24 HOUR WITH SKIPPER, SWITCH CONFIGURATION AND VOLTAGE RATINGS AS INDICATED ON THE DRAWINGS.
2. TIMER SHALL BE ENCLOSED IN A LOCKABLE NEMA 1 ENCLOSURE.
3. TIMER SHALL BE TORK 7000 SERIES OR EQUAL

GROUNDING:
1. GROUNDING SHALL COMPLY WITH THE REQUIREMENTS OF THE LOCAL INSPECTION AUTHORITY.
2. PROVIDE A SEPARATE, INSULATED GROUNDING CONDUCTOR IN EACH FEEDER AND BRANCH CONDUIT, BONDED AT EACH TERMINATION.

SPLASH PAD EQUIPMENT:
1. PROVIDE ALL NECESSARY ITEMS AS REQUIRED TO CONNECT AND PLACE IN PROPER OPERATION ALL OF THE SPLASH PAD EQUIPMENT AND DEVICES.
2. COORDINATE ALL CONNECTION REQUIREMENTS PRIOR TO ORDERING EQUIPMENT AND ROUGH-IN. THIS SHALL INCLUDE LOCATION, VOLTAGE, CIRCUIT BREAKER, FUSE AND WIRE SIZE, PHASE, CONTROL, MOUNTING HEIGHT, ETC. SEE SPLASH PAD EQUIPMENT DOCUMENTS FOR FURTHER INFORMATION.

RENOVATION/DEMOLITION:
1. EXISTING GROUNDING SYSTEM SHALL BE TESTED AND THE NECESSARY CORRECTIONS SHALL BE MADE TO BRING THE GROUNDING SYSTEM INTO CODE COMPLIANCE.
2. ALL EXISTING ELECTRICAL EQUIPMENT, DEVICES AND JUNCTION BOXES BEING REMOVED MUST BE DEACTIVATED AND THE WIRING SHALL BE REMOVED BACK TO THE NEAREST DEVICE THAT IS CONNECTED TO THE SAME CIRCUIT THAT IS TO REMAIN.
3. ALL EXISTING CONDUIT MUST BE REMOVED FROM THE DEVICE BEING REMOVED TO THE NEAREST DEVICE NOT BEING REMOVED OR BACK TO A POINT WHERE THE CONDUIT ENTERS A WALL, FLOOR OR CEILING NOT BEING REMOVED.
4. REMOVE INDICATED EXISTING ELECTRICAL DEVICES AS SHOWN AND PROVIDE COVER PLATES.
5. THE EXISTING EQUIPMENT MUST REMAIN IN OPERATION DURING CONSTRUCTION. RECONNECT OR TEMPORARILY FEED EXISTING EQUIPMENT.
6. CONTRACTOR SHALL PROVIDE ALL MATERIAL AND LABOR TO REFEED OR RECONNECT EXISTING CIRCUITS DISRUPTED BY NEW DEMOLITION WORK THAT ARE REQUIRED TO REMAIN IN OPERATION DURING AND/OR AFTER CONSTRUCTION.
7. THE OWNER MUST APPROVE ANY REQUIRED OUTAGES TO UPGRADE SERVICE OR TO INSTALL EQUIPMENT.

IDENTIFICATION
1 THE CONTRACTOR SHALL LABEL EQUIPMENT WITH ½" DYMO TAPE.
2. ALL MAJOR ELECTRICAL EQUIPMENT SHALL BE IDENTIFIED WHICH SHALL INCLUDE MDP, PANELBOARDS, MOTOR STARTERS, DISCONNECT SWITCHES, SWITCHES, ETC.
3. PROTECTIVE DEVICES IN MDP'S SHALL BE LABELLED WITH THE LOAD SERVED.
4. PROVIDE PANEL AND CIRCUIT NUMBER IDENTIFICATION ON ALL JUNCTION AND PULL BOXES.
5. APPLY THE FACTORY SUPPLIED ARC FLASH WARNING LABELS TO ALL SWITCHBOARDS AND PANELS AS REQUIRED PER NEC 110.16.
6. SERVICE EQUIPMENT SHALL BE LABELED LISTING AVAILABLE FAULT CURRENT.
7. PROVIDE CIRCUIT IDENTIFICATION ON COVER PLATES.
8. PROVIDE NEW TYPEWRITTEN SCHEDULES FOR PANELBOARDS.

AS-BUILT DRAWINGS:
1. PROVIDE AS-BUILT DRAWINGS

TESTS:
1. UPON COMPLETION OF WORK, TEST EACH SYSTEM TO BE FREE OF GROUNDS AND/OR FAULTS. TEST FOR PROPER OPERATION. IF ANY DEFECTS ARE FOUND, TAKE IMMEDIATE ACTION TO REMEDY.
2. CHECK ALL FIXTURES FOR BURNT OUT OR DAMAGED LAMPS AND REPLACE.

GUARANTEE:
CONTRACTOR SHALL GUARANTEE ALL EQUIPMENT AND WIRING TO BE FREE FROM MECHANICAL AND ELECTRICAL DEFECTS FOR A PERIOD OF ONE (1) YEAR FROM DATE OF ACCEPTANCE.

SHOP DRAWINGS
SUBMIT SHOP DRAWINGS FOR THE FOLLOWING EQUIPMENT FOR APPROVAL BY THE ENGINEER:
1. MATERIALS
2. WIRING DEVICES
3. LIGHT FIXTURES
4. TIME CLOCK

FIXTURE SCHEDULE

ALL FIXTURE FINISHES SHALL BE SELECTED BY OWNER/ ARCHITECT.

TYPE AA
CEILING SURFACE MOUNTED LED DOWNLIGHT FIXTURE WITH DIE CAST ALUMINUM HOUSING AND SAFETY GLASS, 120V, 28W, 2914 LUMENS, COLOR 4000K. FINISHES AS SELECTED BY ARCHITECT.

BEGA #B24419 K4 BLK(BLACK)

ELECTRICAL SYMBOL LIST

SYMBOL	DESCRIPTION
A2	DUPLEX RECEPTACLE OUTLET, 20A, 120V "A" DENOTES PANELBOARD, "2" DENOTES CIRCUIT NUMBER OTHER ABBREVIATIONS: WP = WEATHERPROOF WHILE IN USE TR = TAMPER AND WEATHER RESISTANT
	GFI RECEPTACLE
GB	QUAZITE IN-GRADE JUNCTION/PULL BOX FLUSH WITH GRADE
A D1a	LIGHTING FIXTURE "A" DENOTES LIGHT FIXTURE TYPE "D" DENOTES PANELBOARD "1" DENOTES CIRCUIT NUMBER "a" DENOTES SWITCH LEG
J	JUNCTION BOX SIZE AND TYPE AS REQUIRED BY CODE
	EXISTING PANELBOARD
WP	WEATHERPROOF
(e)	EXISTING
T	TIMER

RVi
22 East Chicago Avenue
Suite 200a
Naperville, IL 60540
Tel: 312.634.2100
www.rvilanning.com

PREPARED FOR
CITY OF LAKE FOREST

800 N. FIELD DRIVE
LAKE FOREST, ILLINOIS 60045

CONSULTANTS

CIVIL ENGINEER
HEY AND ASSOCIATES, INC.
26575 W. COMMERCE DRIVE
SUITE 601
VOLO, ILLINOIS 60073
T 847.740.0888

ELECTRICAL ENGINEER
NOVA ENGINEERING, PC
2338 S. CLINE AVENUE
SCHERERVILLE, INDIANA 46375
T 219.865.3352

SOUTH PARK PHASE TWO

ISSUE FOR BID
150 S. MAYWOOD RD.
LAKE FOREST, ILLINOIS 60045

PROJECT NO:	26000793
DATE:	10/28/2026
DRAWN:	RB
REVIEWED:	MZ

October 28, 2026
REVISIONS:
NO. DATE ISSUE

Electrical Schedules

E4.0

01_ORIGINAL ISSUE

L:\RVI - Previous HDGRVI\011 - South Park - Lake Forest_Autocad Working Drawings\1_RVI011 - E3.0, E4.0 SCHEDULES.dwg 10/19/2026 randyb