STATE OF OHIO
DEPARTMENT OF TRANSPORTATION

RIC-13-28.73

BLOOMINGGROVE TOWNSHIP

RICHLAND COUNTY

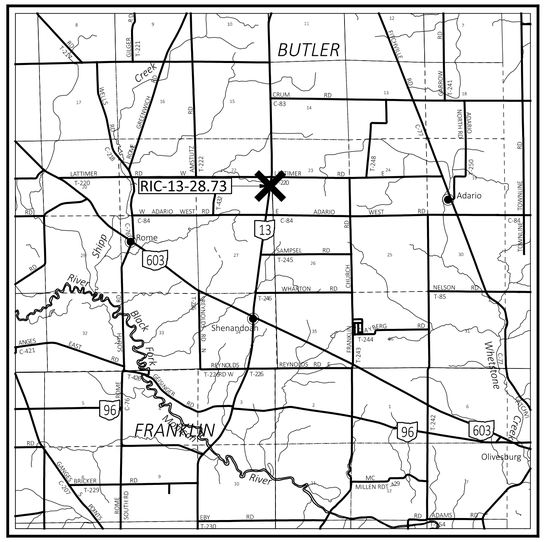

LOCATION MAP

LATITUDE: 40°56'14" LONGITUDE: 82°29'42"

PORTION TO BE IMPROVED	✕
INTERSTATE HIGHWAY	
FEDERAL ROUTES	
STATE ROUTES	
COUNTY & TOWNSHIP ROADS	
OTHER ROADS	

DESIGN DESIGNATION

CURRENT ADT (2026)	*4,400*
DESIGN YEAR ADT (2046)	*5,600*
DESIGN HOURLY VOLUME (2046)	*500*
DIRECTIONAL DISTRIBUTION	*50%*
TRUCKS (24 HOUR B&C)	*12%*
DESIGN SPEED	*55 MPH*
LEGAL SPEED	*55 MPH*
DESIGN FUNCTIONAL CLASSIFICATION:	
MINOR ARTERIAL	
NHS PROJECT	*NO*

DESIGN EXCEPTIONS

NONE

ADA DESIGN WAIVERS

NONE

Notify OHIO811.org Before You Dig
Notify online using **Remote Ticket Entry**
To call dial 8-1-1 or 800-362-2764
idig

INDEX OF SHEETS:

TITLE SHEET	*1*
TYPICAL SECTIONS	*2 - 3*
GENERAL NOTES	*4 - 5*
MOT NOTES	*6*
DETOUR PLAN	*7*
GENERAL SUMMARY	*8 - 9*
ROADWAY SUBSUMMARY	*10*
PLAN AND PROFILE	*11*
CROSS SECTIONS	*12 - 18*
DRAINAGE SUBSUMMARY	*19*
CULVERT DETAILS	*20*
HEADWALL DETAILS	*21 - 23*
CHANNEL CROSS SECTIONS	*24 - 29*
RIGHT OF WAY	*RW.1 - RW.8*

FEDERAL PROJECT NUMBER

E240925

RAILROAD INVOLVEMENT

NONE

PROJECT DESCRIPTION

THIS PROJECT INCLUDES THE REPLACEMENT OF TWIN 54" DIAMETER CORRUGATED METAL PIPE CULVERTS UNDER STATE ROUTE 13 USING OPEN CUT METHODS

EARTH DISTURBED AREAS

PROJECT EARTH DISTURBED AREA:	*0.511 ACRES*
ESTIMATED CONTRACTOR EARTH DISTURBED AREA:	*0.217 ACRES*
NOTICE OF INTENT EARTH DISTURBED AREA:	*NOI NOT REQUIRED*

2023 SPECIFICATIONS

THE STANDARD SPECIFICATIONS OF THE STATE OF OHIO, DEPARTMENT OF TRANSPORTATION, INCLUDING SUPPLEMENTAL SPECIFICATIONS LISTED IN THE PLANS, CHANGES LISTED IN THE PROPOSAL, AND THE SUPPLEMENTAL SPECIFICATION 800 VERSION INDICATED ON THE PROPOSAL SHALL GOVERN THIS IMPROVEMENT.

MAINTENANCE OF TRAFFIC ENDORSEMENT

I HEREBY APPROVE THESE PLANS AND DECLARE THAT THE MAKING OF THIS IMPROVEMENT WILL REQUIRE THE CLOSING TO TRAFFIC OF THE HIGHWAY AND THAT DETOURS WILL BE PROVIDED AS INDICATED ON SHEET 114950_MD001

ROBERT WEAVER
DISTRICT 03 DEPUTY DIRECTOR

PAMELA BORATYN
DIRECTOR, DEPARTMENT OF TRANSPORTATION

STANDARD CONSTRUCTION DRAWINGS

BP-3.1	*1/19/24*	*MT-97.10*	*7/18/25*				
		MT-98.20	*4/19/19*				
CB-2-3, 2-4	*7/19/24*	*MT-101.60*	*1/17/25*				
		MT-105.10	*1/17/20*				
DM-1.1	*7/17/26*	*TC-41.20*	*10/18/13*				
DM-4.3	*1/15/16*	*TC-41.30*	*4/21/23*				
DM-4.4	*1/15/16*	*TC-42.20*	*10/18/13*				
		TC-52.10	*10/18/13*				
MGS-2.1	*7/17/26*	*TC-52.20*	*1/15/21*				
MGS-2.3	*7/17/26*	*TC-65.11*	*1/17/25*				
MGS-5.3	*7/17/26*						
HW-1.1	*7/18/25*						
HW-2.1	*7/15/22*						
HW-2.2	*7/20/18*						

SUPPLEMENTAL SPECIFICATIONS	
800-2023	*1/16/26*
832	*7/18/25*
902	*1/16/26*
919	*1/17/20*

SPECIAL PROVISIONS

WATERWAY PERMIT CONDITIONS DATED 7/15/2026

PLANS PREPARED BY:

OHIO DEPARTMENT OF TRANSPORTATION
DISTRICT THREE ENGINEERING

ENGINEER'S SEAL

STATE OF OHIO
SPENCER THOMAS ORR
E-90904
REGISTERED PROFESSIONAL ENGINEER

TITLE SHEET

DESIGN AGENCY
DISTRICT 3
ENGINEERING TEAM TWO
DESIGNER STO
REVIEWER NRF 07/02/26
PROJECT ID 114950
SHEET P.1 TOTAL 29

RIC-13-28.73

MODEL: Sheet PAPERSIZE: 34x22 (in.) DATE: 8/4/2026 TIME: 4:17:41 PM PLTDRV: OHDOT_PDF.pltcfg PENTBL: 114950_OHDOT_Pen.tbl USER: Spencer.Orr@dot.ohio.gov WORKSPACE: OHDOTCEv02 WORKSET: 114950 PRODUCT: OpenRoadsDesigner 24.00.00.205
pw:\\ohiodot-pw.bentley.com:ohiodot-pw-02\Documents\01 Active Projects\District 03\Richland\114950\400-Engineering\Roadway\Sheets\114950_GT001.dgn

LEGEND

- (A) EXISTING ASPHALT CONCRETE (11.0" ±)
- (1) 202 PAVEMENT REMOVED
- (2) 204 SUBGRADE COMPACTION
- (3) 254 PAVEMENT PLANING, ASPHALT CONCRETE (3.0")
- (4) 301 ASPHALT CONCRETE BASE, PG64-22, (449) (9.0") (TO BE APPLIED IN TWO SEPARATE 4.5" LIFTS)
- (5) 304 AGGREGATE BASE (3.0")
- (6) 304 AGGREGATE BASE (6.0")
- (7) 304 AGGREGATE BASE (8.0")
- (8) 407 TACK COAT (0.08 GAL/SY ON PLANED SURFACE, 0.05 GAL/SY BETWEEN PROPOSED LIFTS)
- (9) 442 ASPHALT CONCRETE SURFACE COURSE, 9.5 MM, TYPE A (449), AS PER PLAN (3.0") (TO BE APPLIED IN TWO SEPARATE 1.5" LIFTS)
- (10) 659 SEEDING AND MULCHING
- (11) 408 PRIME COAT, AS PER PLAN (0.4 GAL/SY)
- (12) ITEM 605 - AGGREGATE DRAINS (0.08 PREF. SLOPE, 0.04 MIN. SLOPE)

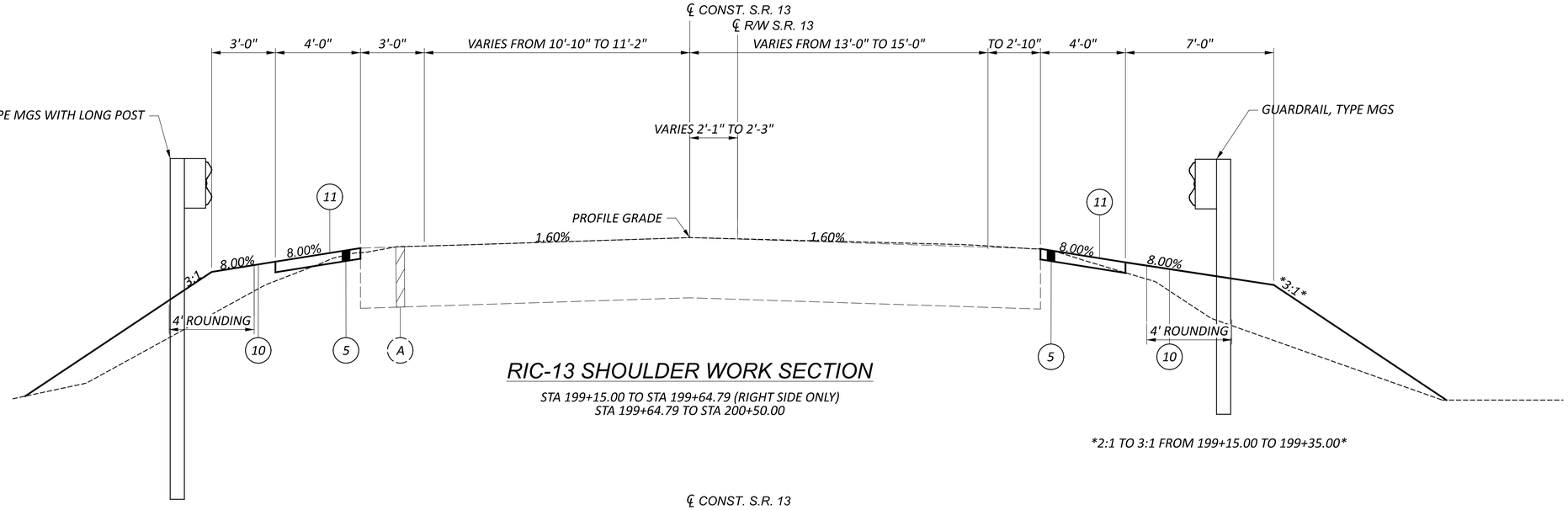

RIC-13 SHOULDER WORK SECTION

STA 199+15.00 TO STA 199+64.79 (RIGHT SIDE ONLY)
STA 199+64.79 TO STA 200+50.00

2:1 TO 3:1 FROM 199+15.00 TO 199+35.00

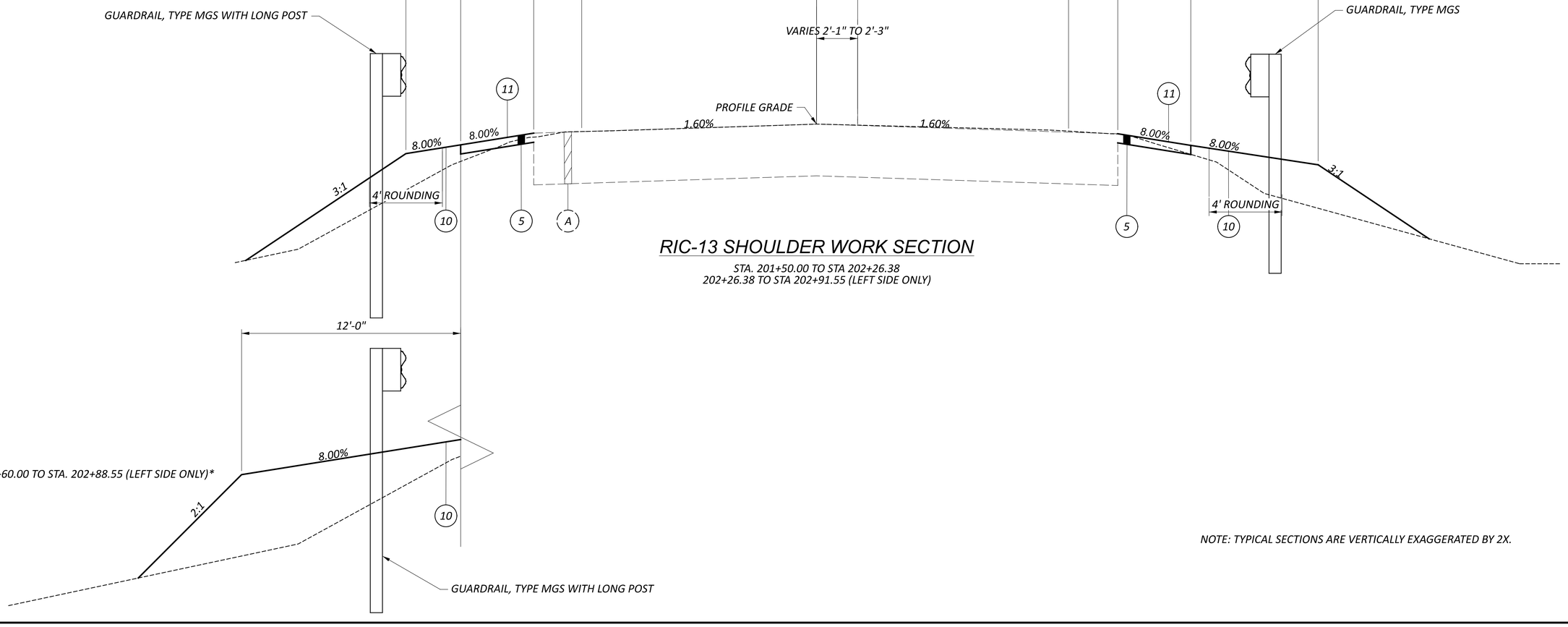

RIC-13 SHOULDER WORK SECTION

STA. 201+50.00 TO STA 202+26.38
202+26.38 TO STA 202+91.55 (LEFT SIDE ONLY)

NOTE: TYPICAL SECTIONS ARE VERTICALLY EXAGGERATED BY 2X.

TYPICAL SECTIONS

RIC-13-28.73

MODEL: GY001B PAPERSIZE: 34x22 (in.) DATE: 8/4/2026 TIME: 4:17:54 PM PLTDRV: OHDOT_PDF.pltcfg PENTBL: 114950_OHDOT_Pen.tbl USER: Spencer.Orr@dot.ohio.gov WORKSPACE: OHDOTCEv02 WORKSET: 114950 PRODUCT: OpenRoadsDesigner 24.00.00.205
pw:\\ohiodot-pw.bentley.com:ohiodot-pw-02\Documents\01 Active Projects\District 03\Richland\114950\400-Engineering\Roadway\Sheets\114950_GY001.dgn

DESIGN AGENCY
DISTRICT 3
ENGINEERING TEAM TWO

DESIGNER
STO

REVIEWER
NRF 07/02/26

PROJECT ID
119450

SHEET P.2 | TOTAL 29

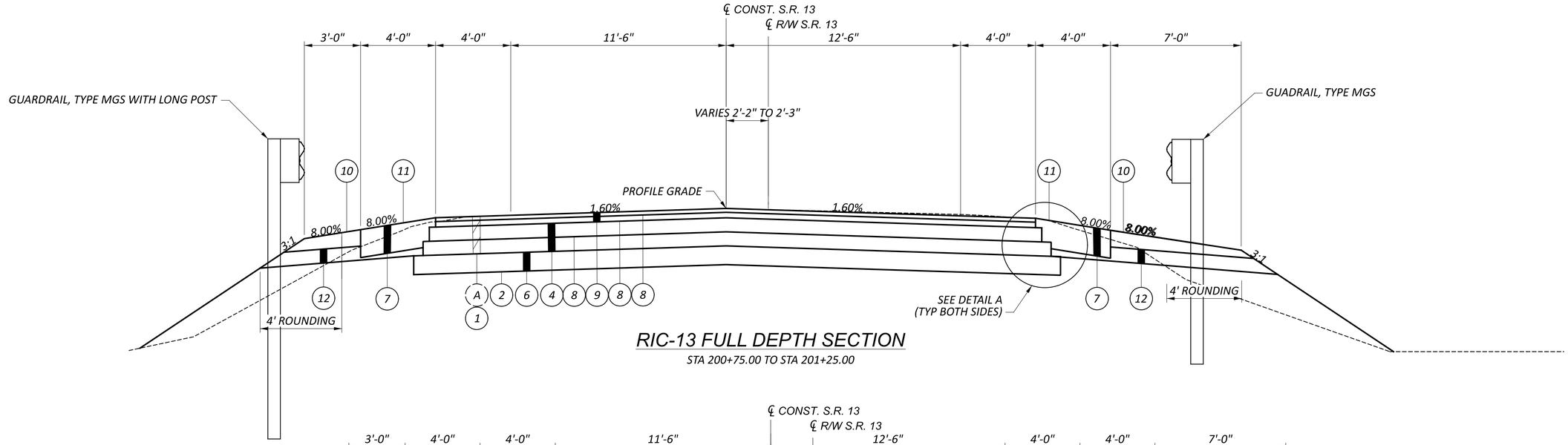

RIC-13 FULL DEPTH SECTION

STA 200+75.00 TO STA 201+25.00

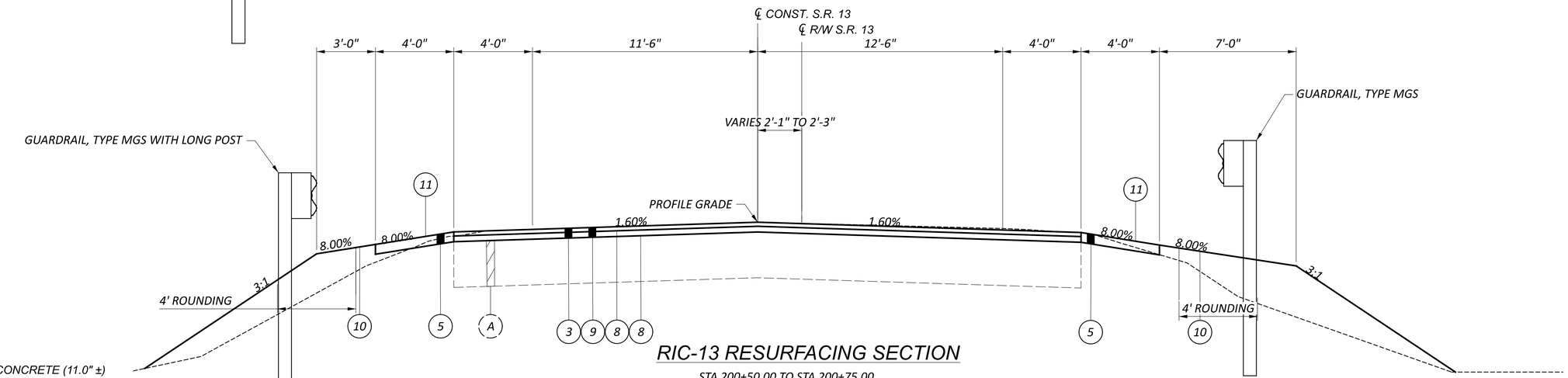

RIC-13 RESURFACING SECTION

STA 200+50.00 TO STA 200+75.00
STA 201+25.00 TO STA 201+50.00

LEGEND

- (A) EXISTING ASPHALT CONCRETE (11.0" ±)
- (1) 202 PAVEMENT REMOVED
- (2) 204 SUBGRADE COMPACTION
- (3) 254 PAVEMENT PLANING, ASPHALT CONCRETE (3.0")
- (4) 301 ASPHALT CONCRETE BASE, PG64-22, (449) (9.0") (TO BE APPLIED IN TWO SEPARATE 4.5" LIFTS)
- (5) 304 AGGREGATE BASE (3.0")
- (6) 304 AGGREGATE BASE (6.0")
- (7) 304 AGGREGATE BASE (8.0")
- (8) 407 TACK COAT (0.08 GAL/SY ON PLANED SURFACE, 0.05 GAL/SY BETWEEN PROPOSED LIFTS)
- (9) 442 ASPHALT CONCRETE SURFACE COURSE, 9.5 MM, TYPE A (449), AS PER PLAN (3.0") (TO BE APPLIED IN TWO SEPARATE 1.5" LIFTS)
- (10) 659 SEEDING AND MULCHING
- (11) 408 PRIME COAT, AS PER PLAN (0.4 GAL/SY)
- (12) ITEM 605 - AGGREGATE DRAINS (0.08 PREF. SLOPE, 0.04 MIN. SLOPE)

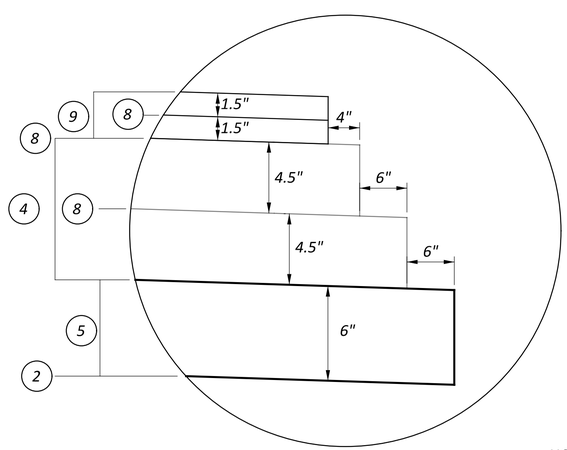

DETAIL A

NOTE: TYPICAL SECTIONS ARE VERTICALLY EXAGGERATED BY 2X.

TYPICAL SECTIONS

DESIGN AGENCY	DISTRICT 3
	ENGINEERING TEAM TWO
DESIGNER	STO
REVIEWER	NRF 07/02/26
PROJECT ID	119450
SHEET	P.3
TOTAL	29

RIC-13-28.73

MODEL: Sheet PAPERSIZE: 34x22 (in.) DATE: 8/4/2026 TIME: 4:17:55 PM PLTDRV: OHDOT_PDF.pltcfg PENTBL: 114950_OHDOT_Pen.tbl USER: Spencer.Orr@dot.ohio.gov WORKSPACE: OHDOTCEv02 WORKSET: 114950 PRODUCT: OpenRoadsDesigner 24.00.00.205
pw:\\ohiodot-pw.bentley.com:ohiodot-pw-02\Documents\01 Active Projects\District 03\Richland\114950\400-Engineering\Roadway\Sheets\114950_GY001.dgn

GENERAL

ROUNDING
(G101)

THE ROUNDING AT SLOPE BREAKPOINTS SHOWN ON THE TYPICAL SECTIONS APPLIES TO ALL CROSS SECTIONS, EVEN THOUGH OTHERWISE SHOWN.

UTILITIES
(G102A)

LISTED BELOW ARE ALL UTILITIES LOCATED WITHIN THE PROJECT LIMITS TOGETHER WITH THEIR RESPECTIVE OWNERS:

COMMUNICATION
BRIGHTSPEED
TIM BOWSER
175 ASHLAND ROAD
P.O. BOX 3555
MANSFIELD, OHIO 44907
419.755.7251
TIM.BOWSER@BRIGHTSPEED.COM

ELECTRIC
OHIO EDISON COMPANY
TRAVIS BALLOG
1717 ASHLAND ROAD
MANSFIELD, OHIO 44905
419.521.6213
BALLOGT@FIRSTENERGYCORP.COM

THE AFOREMENTIONED UTILITY COMPANIES AND AGENCIES HAVE VARIOUS FACILITIES IN THE AREA THAT WILL REMAIN IN PLACE DURING CONSTRUCTION.

EXTREME CAUTION SHOULD BE EXERCISED IN AREAS WITH UTILITIES. SECTIONS 105.07 AND 107.16 OF THE DEPARTMENT OF TRANSPORTATION CONSTRUCTION AND MATERIAL SPECIFICATIONS REQUIRE, AMONG OTHER THINGS, THAT THE CONTRACTOR COOPERATE WITH ALL UTILITIES LOCATED WITHIN THE LIMITS OF THIS CONSTRUCTION PROJECT AND TAKE RESPONSIBILITY FOR THE PROTECTION OF THE UTILITY PROPERTY AND SERVICES.

SURVEYING PARAMETERS
(G105)

PRIMARY PROJECT CONTROL MONUMENTS GOVERN ALL POSITIONING ON ODOT PROJECTS. SEE RIGHT OF WAY PLANS RW.3 FOR A TABLE CONTAINING PROJECT CONTROL INFORMATION.

USE THE FOLLOWING PROJECT CONTROL, VERTICAL POSITIONING, AND HORIZONTAL POSITIONING PARAMETERS FOR ALL SURVEYING:

PROJECT CONTROL
POSITIONING METHOD: GPS
MONUMENT TYPE: TYPE B

VERTICAL POSITIONING
ORTHOMETRIC HEIGHT DATUM: NAVD88
GEOID: GEOID18

HORIZONTAL POSITIONING
REFERENCE FRAME: NAD83 (2011 ADJ, 2010.0)
ELLIPSOID: GRS 80

COORDINATE SYSTEM: O.D.O.T. RICHLAND OCCS*
RICHLAND OCCS PROJECTION PARAMETERS:
PROJECTION: TRANSVERSE MERCATOR
CENTRAL LATITUDE: N 39°30'00"
CENTRAL LONGITUDE: W 277°24'00"
FALSE NORTHING: 0 METERS
FALSE EASTING: 50,000 METERS
PROJECTION SCALE FACTOR: 1.000050
USE THE POSITIONING METHODS AND MONUMENT TYPE USED IN THE ORIGINAL SURVEY TO RESTORE ALL MONUMENTS RELATED TO PRIMARY PROJECT CONTROL THAT ARE DAMAGED OR DESTROYED BY CONSTRUCTION ACTIVITIES. RESTORE THE DAMAGED OR DESTROYED MONUMENTS IN ACCORDANCE WITH CMS 623.

ODOT CONSTRUCTION AND MATERIAL SPECIFICATIONS ITEM 623 WILL GOVERN CONSTRUCTION SURVEYING ACTIVITY.

THE FOLLOWING MONUMENT VERIFICATION REPORT(S) WILL BE REQUIRED:

NONE

623.04a – PRECONSTRUCTION MONUMENT VERIFICATION AND REPORT

623.04b – POST CONSTRUCTION MONUMENT VERIFICATION AND REPORT

WORK LIMITS
(G106)

THE WORK LIMITS SHOWN ON THESE PLANS ARE FOR PHYSICAL CONSTRUCTION ONLY. PROVIDE THE INSTALLATION AND OPERATION OF ALL WORK ZONE TRAFFIC CONTROL AND WORK ZONE TRAFFIC CONTROL DEVICES REQUIRED BY THESE PLANS WHETHER INSIDE OR OUTSIDE THESE WORK LIMITS.

ROADWAY

ITEM 606 – ANCHOR ASSEMBLY, MGS TYPE E (MASH 2016)
(R113A)

THIS ITEM SHALL CONSIST OF FURNISHING AND INSTALLING ANY OF THE MASH 2016 GUARDRAIL END TERMINALS FOR TYPE MGS GUARDRAIL AS LISTED ON ROADWAY ENGINEERING'S WEB PAGE UNDER ROADSIDE SAFETY DEVICES FOR APPROVED GUARDRAIL END TREATMENTS. INSTALLATION SHALL BE AT THE LOCATIONS SPECIFIED IN THE PLANS, IN ACCORDANCE WITH THE MANUFACTURER'S SPECIFICATIONS.

THE FACE OF THE TYPE E IMPACT HEAD SHALL BE COVERED WITH REBOUNDABLE RETROREFLECTIVE SHEETING, PER CMS 730.191.

REFER TO THE MANUFACTURER'S INSTRUCTIONS REGARDING THE INSTALLATION OF, AND THE GRADING AROUND THE FOUNDATION TUBES AND GROUND STRUT. THE TOP OF ANY FOUNDATION TUBE SHOULD BE LESS THAN 4 INCHES ABOVE THE GROUND. THE PLACEMENT OF THE FOUNDATION TUBES SHOULD BE AN APPROPRIATE DEPTH BELOW THE LEVEL LINE IN ORDER TO MAINTAIN THE FINISHED GUARDRAIL HEIGHT OF 31 INCHES FROM THE EDGE OF THE SHOULDER.

ON-SITE GRADING IS REQUIRED IF THE TOP OF THE FOUNDATION TUBES OR TOP OF THE GROUND STRUT DOES PROJECT MORE THAN 4 INCHES ABOVE THE GROUND LINE.

PAYMENT FOR THE ABOVE WORK SHALL BE MADE AT THE UNIT PRICE BID FOR ITEM 606, ANCHOR ASSEMBLY, MGS TYPE E (MASH 2016), EACH, AND SHALL INCLUDE ALL LABOR, TOOLS, EQUIPMENT AND MATERIALS NECESSARY TO CONSTRUCT A COMPLETE AND FUNCTIONAL ANCHOR ASSEMBLY SYSTEM, INCLUDING ALL RELATED TRANSITIONS, REFLECTIVE SHEETING, HARDWARE, GRADING, EMBANKMENT AND EXCAVATION NOT SEPARATELY SPECIFIED, AS REQUIRED BY THE MANUFACTURER.

MONUMENT ASSEMBLIES
(G110)

CONSTRUCT MONUMENT ASSEMBLIES IN ACCORDANCE WITH THE DETAILS SHOWN ON THE STANDARD CONSTRUCTION DRAWINGS AND AT THE LOCATIONS SHOWN ON RIGHT OF WAY PLANS RW.3.

EROSION CONTROL

ITEM 659 – SEEDING AND MULCHING
E101A

THE FOLLOWING QUANTITIES ARE PROVIDED TO PROMOTE GROWTH AND CARE OF PERMANENT SEEDED AREAS:

659	COMMERCIAL FERTILIZER	0.13	TON
659	LIME	0.21	ACRE
659	WATER	5.51	M GAL
659	REPAIR SEEDING AND MULCHING	50	SQ YD
659	INTERSEEDING	50	SQ YD
659	TOPSOIL	110	CU YD
659	SOIL ANALYSIS TEST	2	EACH
659	SEEDING AND MULCHING	994	SQ YD

SEEDING AND MULCHING SHALL BE APPLIED TO ALL AREAS OF EXPOSED SOIL BETWEEN THE RIGHT-OF-WAY LINES. QUANTITY CALCULATIONS FOR SEEDING AND MULCHING ARE BASED ON THESE LIMITS. QUANTITIES ARE CARRIED TO THE GENERAL SUMMARY.

ENVIRONMENTAL/REMEDIATION

ITEM 605 – AGGREGATE DRAINS

AGGREGATE DRAINS SHALL BE PLACED AT THE FOLLOWING LOCATIONS:

STA. 200+75 (LEFT AND RIGHT)
STA. 201+25 (LEFT AND RIGHT)

ENVIRONMENTAL COMMITMENTS

ODOT WILL OBTAIN ALL APPROPRIATE WATERWAY PERMITS PRIOR TO ANY WORK WITHIN THE JURISDICTIONAL BOUNDARY OF ANY WATERWAY, INCLUDING WETLANDS, AND ALL WATERWAY PERMIT SPECIAL PROVISIONS WILL BE NOTED UNDER SPECIAL PROVISIONS IN THE PLANS AND ADHERED TO DURING CONSTRUCTION.

THE CONTRACTOR MUST SUBMIT THE OEPA DEMOLITION/RENOVATION FORM TO THE OEPA WITHIN 10 BUSINESS DAYS PRIOR TO DEMOLITION.

DRAINAGE

EXISTING CULVERT VERIFICATION

DETAILS AND DIMENSIONS SHOWN ON THESE PROPOSED PLANS PERTAINING TO THE EXISTING CULVERT HAVE BEEN OBTAINED FROM PLANS OF THE EXISTING CULVERT AND FROM FIELD OBSERVATIONS AND MEASUREMENTS. CONSEQUENTLY, SUCH DETAILS AND DIMENSIONS ARE INDICATIVE OF THE EXISTING CULVERT AND THE PROPOSED WORK, BUT THEY SHALL BE CONSIDERED TENTATIVE AND APPROXIMATE. THE CONTRACTOR IS REFERRED TO C&MS SECTIONS 102.05 AND 105.02. BASE THE CONTRACT BID PRICES UPON A RECOGNITION OF THE UNCERTAINTIES DESCRIBED ABOVE AND UPON A PREBID EXAMINATION OF THE EXISTING CULVERT. HOWEVER, THE DEPARTMENT WILL PAY FOR ALL PROJECT WORK BASED UPON ACTUAL DETAILS AND DIMENSIONS THAT HAVE BEEN VERIFIED IN THE FIELD.

REVIEW OF DRAINAGE FACILITIES
(D114)

BEFORE ANY WORK IS STARTED ON THE PROJECT AND AGAIN BEFORE FINAL ACCEPTANCE BY THE STATE, REPRESENTATIVES OF THE STATE AND THE CONTRACTOR, ALONG WITH LOCAL REPRESENTATIVES, SHALL MAKE AN INSPECTION OF ALL EXISTING SEWERS WHICH ARE TO REMAIN IN SERVICE AND WHICH MAY BE AFFECTED BY THE WORK. THE CONDITION OF THE EXISTING CONDUITS AND THEIR APPURTENANCE SHALL BE DETERMINED FROM FIELD OBSERVATIONS. RECORDS OF THE INSPECTION SHALL BE KEPT IN WRITING BY THE STATE.

ALL NEW CONDUITS, INLETS, CATCH BASINS, AND MANHOLES CONSTRUCTED AS A PART OF THE PROJECT SHALL BE FREE OF ALL FOREIGN MATTER AND IN A CLEAN CONDITION BEFORE THE PROJECT WILL BE ACCEPTED BY THE STATE.

ALL EXISTING SEWERS INSPECTED INITIALLY BY THE ABOVE MENTIONED PARTIES SHALL BE MAINTAINED AND LEFT IN A CONDITION REASONABLY COMPARABLE TO THAT DETERMINED BY THE ORIGINAL INSPECTION. ANY CHANGE IN THE CONDITION RESULTING FROM THE CONTRACTOR'S OPERATIONS SHALL BE CORRECTED BY THE CONTRACTOR TO THE SATISFACTION OF THE ENGINEER.

PAYMENT FOR ALL OPERATIONS DESCRIBED ABOVE SHALL BE INCLUDED IN THE CONTRACT PRICE FOR THE PERTINENT 611 CONDUIT ITEMS.

ITEM 202 – STRUCTURE REMOVED, AS PER PLAN

WHEN NO LONGER NEEDED TO MAINTAIN TRAFFIC, THE EXISTING STRUCTURE SHALL BE REMOVED UPON RECEIVING PERMISSION FROM THE ENGINEER, INCLUDING BUT NOT LIMITED TO, EXISTING HEADWALLS AND CONDUIT.

ITEM 611 – FARM DRAINS
(D107)

ALL FARM DRAINS, WHICH ARE ENCOUNTERED DURING CONSTRUCTION, SHALL BE PROVIDED WITH UNOBSTRUCTED OUTLETS. EXISTING COLLECTORS WHICH ARE LOCATED BELOW THE ROADWAY DITCH ELEVATIONS, AND WHICH CROSS THE ROADWAY, SHALL BE REPLACED WITHIN THE (RIGHT OF WAY) (CONSTRUCTION) LIMITS BY ITEM 611 CONDUIT, TYPE B, ONE COMMERCIAL SIZE LARGER THAN THE EXISTING CONDUIT.

EXISTING COLLECTORS AND ISOLATED FARM DRAINS, WHICH ARE ENCOUNTERED ABOVE THE ELEVATION OF ROADWAY DITCHES, SHALL BE OUTLET INTO THE ROADWAY DITCH BY 611 TYPE F CONDUIT. THE OPTIMUM OUTLET ELEVATION SHALL BE ONE FOOT ABOVE THE FLOWLINE ELEVATION OF THE DITCH. LATERAL FIELD TILES WHICH CROSS THE ROADWAY SHALL BE INTERCEPTED BY 611, TYPE E CONDUIT, AND CARRIED IN A LONGITUDINAL DIRECTION TO AN ADEQUATE OUTLET OR ROADWAY CROSSING.

THE LOCATION, TYPE, SIZE AND GRADE OF REPLACEMENTS SHALL BE DETERMINED BY THE ENGINEER AND PAYMENT SHALL BE MADE ON FINAL MEASUREMENTS.

EROSION CONTROL PADS AND ANIMAL GUARDS SHALL BE PROVIDED AT THE OUTLET END OF ALL FARM DRAINS AS PER STANDARD CONSTRUCTION DRAWING DM-1.1, EXCEPT WHEN THEY OUTLET INTO A DRAINAGE STRUCTURE. PAYMENT FOR THE EROSION CONTROL PADS AND ANIMAL GUARDS AND ANY NECESSARY BENDS OR BRANCHES SHALL BE INCLUDED FOR PAYMENT IN THE PERTINENT CONDUIT ITEMS.

ITEM 611 – RESIDENTIAL AND COMMERCIAL DRAINAGE CONNECTIONS

EXISTING ROOF DRAINS, FOOTER DRAINS, OR YARD DRAINS, DISTURBED BY THE WORK, SHALL BE PROVIDED WITH UNOBSTRUCTED OUTLETS BY CONNECTING A CONDUIT THROUGH THE CURB OR INTO A DRAINAGE STRUCTURE. THE LOCATION, TYPE, SIZE AND GRADE OF THE NEW CONDUIT REQUIRED TO REPLACE OR EXTEND THE EXISTING DRAIN WILL BE DETERMINED BY THE ENGINEER.

THE FOLLOWING CONDUIT TYPES MAY BE USED: 707.33, 707.41 NON-PERFORATED, 707.42, 707.43, 707.45, 707.46, 707.47, 707.51, 707.52 SDR35.

PAYMENT FOR ALL LABOR AND MATERIALS WILL BE PERFORMED BY CHANGE ORDER.

GENERAL NOTES

DESIGN AGENCY
DISTRICT 3
ENGINEERING TEAM TWO
DESIGNER
STO
REVIEWER
NRF 07/02/26
PROJECT ID
119450
SHEET P.4 TOTAL 29

RIC-13-28.73

MODEL: Sheet PAPERSIZE: 34x22 (in.) DATE: 8/4/2026 TIME: 4:18:01 PM PLTDRV: OHDOT_PDF.pltcfg PENTBL: 114950_OHDOT_Pen.tbl USER: Spencer.Orr@dot.ohio.gov WORKSPACE: OHDOTCEv02 WORKSET: 114950 PRODUCT: OpenRoadsDesigner 24.00.00.205
pw:\\ohiodot-pw.bentley.com:ohiodot-pw-02\Documents\01 Active Projects\District 03\Richland\114950\400-Engineering\Roadway\Sheets\114950_GN001.dgn

DRAINAGE (CONT.)

CROSSINGS AND CONNECTIONS TO EXISTING PIPES AND UTILITIES (D104)

WHERE PLANS PROVIDE FOR A PROPOSED CONDUIT TO BE CONNECTED TO, OR CROSS OVER OR UNDER AN EXISTING SEWER OR UNDERGROUND UTILITY, THE CONTRACTOR SHALL LOCATE THE EXISTING PIPES OR UTILITIES BOTH AS TO LINE AND GRADE BEFORE STARTING TO LAY THE PROPOSED CONDUIT.

IF IT IS DETERMINED THAT THE ELEVATION OF THE EXISTING CONDUIT, OR EXISTING APPURTENANCE TO BE CONNECTED, DIFFERS FROM THE PLAN ELEVATION OR RESULTS IN A CHANGE IN THE PLAN CONDUIT SLOPE, THE ENGINEER SHALL BE NOTIFIED BEFORE STARTING CONSTRUCTION OF ANY PORTION OF THE PROPOSED CONDUIT WHICH WILL BE AFFECTED BY THE VARIANCE IN THE EXISTING ELEVATIONS.

IF IT IS DETERMINED THAT THE PROPOSED CONDUIT WILL INTERSECT AN EXISTING SEWER OR UNDERGROUND UTILITY IF CONSTRUCTED AS SHOWN ON THE PLAN, THE ENGINEER SHALL BE NOTIFIED BEFORE STARTING CONSTRUCTION OF ANY PORTION OF THE PROPOSED CONDUIT WHICH WOULD BE AFFECTED BY THE INTERFERENCE WITH AN EXISTING FACILITY.

PAYMENT FOR ALL THE OPERATIONS DESCRIBED ABOVE SHALL BE INCLUDED IN THE CONTRACT PRICE FOR THE PERTINENT 611 CONDUIT ITEM.

PAVEMENT

ITEM 408 - PRIME COAT, AS PER PLAN

THE CONTRACTOR SHALL APPLY ONE COAT OF MC-70 (AS PER SECTION 702) AT A RATE OF 0.40 GAL/SY TO THE COMPLETED AGGREGATE SHOULDER (ITEM 617) AS DIRECTED BY THE ENGINEER. THE CONTRACTOR SHALL PROVIDE A SHIELD TO PREVENT THE SPRAYING OR DRIFTING OF LIQUID BITUMINOUS MATERIAL ONTO THE EDGE OF PAVEMENT OR EDGE LINE. THE CONTRACTOR SHALL APPLY THE PRIME COAT TO THE AGGREGATE SHOULDER WITHIN 7 (SEVEN) CALENDAR DAYS OF THE BERM MATERIAL BEING LAYED ON THE SHOULDER. PRIOR TO APPLYING THE PRIME COAT LAYER, IT IS ALSO THE CONTRACTOR'S RESPONSIBILITY TO CORRECT ANY DAMAGES TO AGGREGATE SHOULDER THAT HAS OCCURRED DURING THE PERIOD OF TIME BETWEEN THE LAYING OF THE BERM MATERIAL AND THE SPRAYING OF PRIME COAT. THE ATTENTION OF THE CONTRACTOR IS DIRECTED TO 107.10 OF THE SPECIFICATIONS.

ITEM 442 - ASPHALT CONCRETE SURFACE COURSE, 9.5 MM, TYPE A (449)), AS PER PLAN

ALL OPEN TRANSVERSE JOINTS SHALL BE TAPERED TO MEET EXISTING PAVEMENT BEFORE INTRODUCING TRAFFIC. A "BUMP" SIGN (W8-1-36) SHALL BE ERECTED ON EACH SIDE OF TRANSVERSE JOINTS LEFT OPEN OVER NIGHT, INCLUDING A SPEED ADVISORY SIGN. THESE SIGNS SHALL BE REMOVED IMMEDIATELY AFTER JOINT HAS BEEN CLOSED. PLACEMENT OF SIGNS SHALL BE INCLUDED IN THE UNIT PRICE BID FOR ITEM 614 MAINTAINING TRAFFIC.

CARE SHALL BE TAKEN TO MATCH EXISTING PAVEMENT ELEVATIONS AT EXISTING PAVED BERMS, DRIVES, INTERSECTIONS, ETC.

REQUIREMENTS OF 442 APPLY EXCEPT AS FOLLOWS:
MIX DESIGN: FOR Ndes USE 50 GYRATIONS, FOR Nmax USE 75 GYRATIONS.
CHOOSE OPTIMUM BINDER CONTENT AT DESIGN AIR VOIDS OF 3.5%.
MINIMUM TOTAL PG BINDER CONTENT IS 6.3 PERCENT.
MINIMUM VIRGIN PG BINDER CONTENT IS 5.2 PERCENT.
USE A PG 64-22 BINDER.
WHEN AN AGGREGATE SOURCE IS SPECIALLY DESIGNATED WITH AN SR ON THE AGGREGATE GRAVITY LIST DO NOT USE THE AGGREGATE EXCEPT AS ALLOWED FOR MEDIUM TRAFFIC IN THE GUIDELINES FOR MAINTAINING ADEQUATE PAVEMENT FRICTION IN SURFACE PAVEMENT.

GENERAL NOTES

DESIGN AGENCY
DISTRICT 3
ENGINEERING TEAM TWO

DESIGNER
STO

REVIEWER
NRF 07/02/26

PROJECT ID
119450

SHEET P.5 | TOTAL 29

RIC-13-28.73

MODEL: Sheet 2 PAPERSIZE: 34x22 (in.) DATE: 8/4/2026 TIME: 4:18:40 PM PLTDRV: OHDOT_PDF.pltcfg PENTBL: 114950_OHDOT_Pen.tbl USER: Spencer.Orr@dot.ohio.gov WORKSPACE: OHDOTCEv02 WORKSET: 114950 PRODUCT: OpenRoadsDesigner 24.00.00.205
pw:\\ohiodot-pw.bentley.com:ohiodot-pw-02\Documents\01 Active Projects\District 03\Richland\114950\400-Engineering\Roadway\Sheets\114950_GN001.dgn

MAINTENANCE OF TRAFFIC

ITEM 614 – MAINTAINING TRAFFIC (GENERAL)
(TEM 642-2)

MAINTAIN ONE 10' LANE OF TRAFFIC AT ALL TIMES.

SUBMIT, IN WRITING, A SCHEDULE OF OPERATIONS TO THE ENGINEER AND RECEIVE APPROVAL BEFORE WORK IS STARTED ON THE PROJECT. PRIOR TO BEGINNING WORK, COORDINATE THE MAINTENANCE OF TRAFFIC OPERATIONS WITH THE LOCAL STATE HIGHWAY PATROL.

ITEM 614 – MAINTAINING TRAFFIC (PREFABRICATED COMPONENTS)

DO NOT CLOSE THE ROADWAY TO TRAFFIC FOR THE REMOVAL OR MODIFICATION OF THE EXISTING STRUCTURE OR CONDUIT UNTIL ALL NEW PREFABRICATED MATERIALS, i.e. PRECAST BEAMS, PRECAST HEADWALLS, GIRDERS, STEEL BEAMS, ETC. NECESSARY TO PLACE THE ROADWAY BACK IN SERVICE HAVE BEEN TESTED, APPROVED, AND ARE READY FOR DELIVERY TO THE SITE.

ITEM 614 – MAINTAINING TRAFFIC (TIME LIMITATION ON A DETOUR)
(TEM 642-4)

A MINIMUM OF ONE LANE OF TRAFFIC IN EACH DIRECTION SHALL BE MAINTAINED AT ALL TIMES, EXCEPT FOR A PERIOD NOT TO EXCEED 45 CONSECUTIVE CALENDAR DAYS, WHEN THROUGH TRAFFIC MAY BE DETOURED AS SHOWN ON SHEET P.7. A DISINCENTIVE SHALL BE ASSESSED IN THE AMOUNT OF $10,000/DAY PER DAY FOR EACH CALENDAR DAY THE ROADWAY REMAINS CLOSED TO TRAFFIC BEYOND THE SPECIFIED LIMIT.

ITEM 614 – MAINTAINING TRAFFIC (LANE CLOSURE/REDUCTION REQUIRED)
(TEM 642-7)

LENGTH AND DURATION OF LANE CLOSURES AND RESTRICTIONS SHALL BE AT THE APPROVAL OF THE ENGINEER. IT IS THE INTENT TO MINIMIZE THE IMPACT TO THE TRAVELING PUBLIC. LANE CLOSURES OR RESTRICTIONS OVER SEGMENTS OF THE PROJECT IN WHICH NO WORK IS ANTICIPATED WITHIN A REASONABLE TIME FRAME, AS DETERMINED BY THE ENGINEER, SHALL NOT BE PERMITTED. THE LEVEL OF UTILIZATION OF MAINTENANCE OF TRAFFIC DEVICES SHALL BE COMMENSURATE WITH THE WORK IN PROGRESS.

ITEM 614 – MAINTAINING TRAFFIC (NOTICE OF CLOSURE SIGN)
(TEM 642-8)
NOTICE OF CLOSURE SIGNS (W20-H14) SHALL BE ERECTED BY THE CONTRACTOR PRIOR TO THE SCHEDULED ROAD OR RAMP CLOSURE IN ACCORDANCE WITH THE NOTICE OF CLOSURE TIME TABLE BELOW. [AT THE APPROVAL OF THE ENGINEER, PORTABLE CHANGEABLE MESSAGE SIGNS MAY BE USED IN LIEU OF THE STANDARD FLAT SHEET SIGN FOR CLOSURE DURATIONS OF LESS THAN 1 WEEK.] THE SIGNS SHALL BE ERECTED ON THE RIGHT-HAND SIDE OF THE ROAD/RAMP FACING TRAFFIC. THEY SHALL BE PLACED SO AS NOT TO INTERFERE WITH THE VISIBILITY OF ANY OTHER TRAFFIC CONTROL SIGNS. ON ROADWAYS, THEY SHOULD BE ERECTED AT OR NEAR THE POINT OF CLOSURE. THE SIGNS MAY BE ERECTED ANYWHERE ON RAMPS AS LONG AS THEY ARE VISIBLE TO THE MOTORISTS USING THE RAMP. ON ENTRANCE RAMPS, THE SIGN SHALL BE ERECTED WELL IN ADVANCE OF THE MERGE AREA TO AVOID DISTRACTING MOTORISTS.

NOTICE OF CLOSURE SIGN TIME TABLE		
ITEM	DURATION OF CLOSURE	SIGN DISPLAYED TO PUBLIC
RAMP AND ROAD CLOSURES	≥ 2 WEEKS	14 CALENDAR DAYS*
	> 12 HOURS & < 2 WEEKS	7 CALENDAR DAYS*
	< 12 HOURS	2 BUSINESS DAYS*

** DAYS PRIOR TO CLOSURE*

THE SIGN SHALL DISPLAY THE DATE OF THE CLOSURE IN MMM-DD FORMAT AND THE NUMBER OF DAYS OF THE CLOSURE. THE LAST LINE OF THE W20-H14 SIGN LISTS THE NAME OF THE DEPARTMENT, i.e. "THE OHIO DEPT. OF TRANS."

ITEM 614 – MAINTAINING TRAFFIC (ROAD CLOSED SIGN)
(TEM 642-10)

THE CONTRACTOR SHALL PROVIDE, ERECT AND MAINTAIN STANDARD 48 X 30 INCH ROAD CLOSED SIGNS, SIGN SUPPORTS, BARRICADES AND LIGHTS, AS DETAILED IN SCD MT-101.60 AT THE FOLLOWING LOCATIONS DURING PERIODS IN WHICH THE AFFECTED ROADS ARE CLOSED TO TRAFFIC.

MAINTENANCE OF LOCAL DETOUR ROUTE
(TEM 642-25)

A LOCAL DETOUR ROUTE, OTHER THAN THE OFFICIAL SIGNED ODOT DETOUR ROUTE, AS NOTED IN THESE PLANS, WILL BE SELECTED BY AGREEMENT BETWEEN ODOT AND LOCAL GOVERNMENTAL AGENCIES PRIOR TO THE HIGHWAY CLOSURE. DURING THE TIME THAT TRAFFIC IS DETOURED, THE CONTRACTOR SHALL MAINTAIN THIS ROUTE IN A CONDITION WHICH IS REASONABLY SMOOTH AND FREE FROM HOLES, RUTS, RIDGES, BUMPS, DUST, AND STANDING WATER. ONCE THE DETOUR IS REMOVED AND TRAFFIC RETURNED TO ITS NORMAL PATTERN, THE DESIGNATED LOCAL DETOUR ROUTE SHALL BE RESTORED TO A CONDITION THAT IS EQUIVALENT TO THAT WHICH EXISTED PRIOR TO ITS USE FOR THIS PURPOSE. ALL SUCH WORK SHALL BE PERFORMED WHEN AND AS DIRECTED BY THE ENGINEER. THE DESIGNATED LOCAL DETOUR ROUTE IS TO BE REVIEWED AND REPAIRED PRIOR TO THE ASPHALT CONTRACTOR OR SUBCONTRACTOR LEAVING THE PROJECT.

PAYMENT FOR THE WORK NECESSARY TO REPAIR THESE LOCAL ROADS WILL BE PERFORMED BY CHANGE ORDER.

ITEM 614 – PORTABLE CHANGEABLE MESSAGE SIGNS, AS PER PLAN
(TEM 642-41)

THE CONTRACTOR SHALL FURNISH, INSTALL, MAINTAIN AND REMOVE, WHEN NO LONGER NEEDED, A CHANGEABLE MESSAGE SIGN. THE SIGN SHALL BE OF A TYPE SHOWN ON A LIST OF APPROVED PCMS UNITS AVAILABLE ON THE OFFICE OF MATERIALS MANAGEMENT WEB PAGE. THE LIST CONTAINS CLASS A AND B UNITS WITH MINIMUM LEGIBILITY DISTANCES OF 800 FEET AND 650 FEET, RESPECTIVELY.

EACH SIGN SHALL BE TRAILER-MOUNTED AND EQUIPPED WITH A FUNCTIONAL DIMMING MECHANISM, TO DIM THE SIGN DURING DARKNESS, AND A TAMPER AND VANDAL PROOF ENCLOSURE. EACH SIGN SHALL BE PROVIDED WITH APPROPRIATE TRAINING AND OPERATION INSTRUCTIONS TO ENABLE ON-SITE PERSONNEL TO OPERATE AND TROUBLESHOOT THE UNIT. THE SIGN SHALL ALSO BE CAPABLE OF BEING POWERED BY AN ELECTRICAL SERVICE DROP FROM A LOCAL UTILITY COMPANY. THE PCMS SHALL BE DELINEATED IN ACCORDANCE WITH C&MS 614.03.

THE PROBABLE PCMS LOCATIONS AND WORK LIMITS FOR THOSE LOCATIONS ARE SHOWN ON SHEET(S) OF THE PLAN. PLACEMENT, OPERATION, MAINTENANCE AND ALL ACTIVATION OF THE SIGNS BY THE CONTRACTOR SHALL BE AS DIRECTED BY THE ENGINEER. THE PCMS SHALL BE LOCATED IN A HIGHLY VISIBLE POSITION YET PROTECTED FROM TRAFFIC. THE CONTRACTOR SHALL, AT THE DIRECTION OF THE ENGINEER, RELOCATE THE PCMS TO IMPROVE VISIBILITY OR ACCOMMODATE CHANGED CONDITIONS. WHEN NOT IN USE, THE PCMS SHALL BE TURNED OFF. ADDITIONALLY, WHEN NOT IN USE FOR EXTENDED PERIODS OF TIME, THE PCMS SHALL BE TURNED AWAY FROM ALL TRAFFIC.

THE ENGINEER SHALL BE PROVIDED ACCESS TO EACH SIGN UNIT AND SHALL BE PROVIDED WITH APPROPRIATE TRAINING AND OPERATION INSTRUCTIONS TO ENABLE ODOT PERSONNEL TO OPERATE AND TROUBLESHOOT THE UNIT, AND TO REVISE SIGN MESSAGES, IF NECESSARY.

(THE CONTRACTOR SHALL IMPLEMENT A SYSTEM WHEREBY CHANGEABLE MESSAGES WILL BE IMPLEMENTED WITHIN 2 HOURS FOLLOWING TELEPHONE NOTIFICATION FROM THE PROJECT ENGINEER TO A DESIGNATED PHONE.)

ALL MESSAGES TO BE DISPLAYED ON THE SIGN WILL BE PROVIDED BY THE ENGINEER. A LIST OF ALL REQUIRED PRE-PROGRAMMED MESSAGES WILL BE GIVEN TO THE CONTRACTOR AT THE PROJECT PRECONSTRUCTION CONFERENCE. THE SIGN SHALL HAVE THE CAPABILITY TO STORE UP TO 99 MESSAGES. MESSAGE MEMORY OR PRE-PROGRAMMED DISPLAYS SHALL NOT BE LOST AS A RESULT OF POWER FAILURES TO THE ON-BOARD COMPUTER. THE SIGN LEGEND SHALL BE CAPABLE OF BEING CHANGED IN THE FIELD. THREE-LINE PRESENTATION FORMATS WITH UP TO SIX MESSAGE PHASES SHALL BE SUPPORTED. PCMS FORMAT SHALL PERMIT THE COMPLETE MESSAGE FOR EACH PHASE TO BE READ AT LEAST TWICE.

THE PCMS SHALL CONTAIN AN ACCURATE CLOCK AND PROGRAMMING LOGIC WHICH WILL ALLOW THE SIGN TO BE ACTIVATED, DEACTIVATED OR MESSAGES CHANGED AUTOMATICALLY AT DIFFERENT TIMES OF THE DAY FOR DIFFERENT DAYS OF THE WEEK.

(THE PCMS SHALL CONTAIN A CELLULAR TELEPHONE DATA LINK WHICH WILL (IN ACTIVE CELLULAR PHONE AREAS) ALLOW REMOTE SIGN ACTIVATION, MESSAGE CHANGES, MESSAGE ADDITIONS AND REVISIONS TO TIME OF DAY PROGRAMS. THE SYSTEM SHALL ALSO PERMIT VERIFICATION OF CURRENT AND PROGRAMMED MESSAGES. ONE REMOTE DATA INPUT DEVICE (LAPTOP COMPUTER PLUS MODEM OR EQUIVALENT) SHALL BE FURNISHED FOR USE BY THE DISTRICT TRAFFIC ENGINEER, OR EQUIVALENT, AND SHALL BE INSURED AGAINST THEFT.) THE PCMS UNIT SHALL BE MAINTAINED IN GOOD WORKING ORDER BY THE CONTRACTOR IN ACCORDANCE WITH THE PROVISIONS OF C&MS 614.07. THE CONTRACTOR SHALL, PRIOR TO ACTIVATING THE UNIT, MAKE ARRANGEMENTS, WITH AN AUTHORIZED SERVICE AGENT FOR THE PCMS, TO ASSURE PROMPT SERVICE IN THE EVENT OF FAILURE. ANY FAILURE SHALL NOT RESULT IN THE SIGN BEING OUT OF SERVICE FOR MORE THAN 12 HOURS, INCLUDING WEEKENDS. FAILURE TO COMPLY MAY RESULT IN AN ORDER TO STOP WORK AND OPEN ALL TRAFFIC LANES AND/OR IN THE DEPARTMENT TAKING APPROPRIATE ACTION TO SAFELY CONTROL TRAFFIC. THE ENTIRE COST TO CONTROL TRAFFIC, ACCRUED BY THE DEPARTMENT DUE TO THE CONTRACTOR'S NONCOMPLIANCE, WILL BE DEDUCTED FROM MONEYS DUE, OR TO BECOME DUE THE CONTRACTOR ON HIS CONTRACT.

THE CONTRACTOR SHALL BE RESPONSIBLE FOR 24-HOUR-PER-DAY OPERATION AND MAINTENANCE OF THESE SIGNS ON THE PROJECT FOR THE DURATION OF THE PHASES WHEN THE PLAN REQUIRES THEIR USE.

PAYMENT FOR THE ABOVE DESCRIBED ITEM SHALL BE AT THE CONTRACT UNIT PRICE. PAYMENT SHALL INCLUDE ALL LABOR, MATERIALS, EQUIPMENT, FUELS, LUBRICATING OILS, SOFTWARE, HARDWARE AND INCIDENTALS TO PERFORM THE ABOVE DESCRIBED WORK.

ITEM 614 – PORTABLE CHANGEABLE MESSAGE SIGN, AS PER PLAN
2 SIGN MONTHS
ASSUMING 2 PCMS SIGN(S) FOR 1 MONTH

NOTIFICATION OF TRAFFIC RESTRICTIONS
(TEM 642-58)

THROUGHOUT THE DURATION OF THE PROJECT, THE CONTRACTOR SHALL NOTIFY THE PROJECT ENGINEER IN WRITING OF ALL TRAFFIC RESTRICTIONS AND UPCOMING MAINTENANCE OF TRAFFIC CHANGES. THE CONTRACTOR SHALL ENSURE THE WRITTEN NOTIFICATION IS SUBMITTED IN A TIMELY MANNER TO ALLOW THE PROJECT ENGINEER TO MEET THE REQUIRED TIME FRAMES SET FORTH IN THE TABLE BELOW TO INFORM THE SPECIAL HAULING PERMITS SECTION (HAULING.PERMITS@DOT.OHIO.GOV), THE DISTRICT PUBLIC INFORMATION OFFICE (PIO), THE DISTRICT DETOUR NOTIFICATION EMAIL LIST (D03.DETOUR.NOTIFICATION@DOT.OHIO.GOV), AND THE DISTRICT LANE CLOSURE NOTIFICATION EMAIL LIST (D03.LANECLOSURE@DOT.OHIO.GOV). THIS NOTIFICATION SHALL BE RECEIVED BY THE PROJECT ENGINEER PRIOR TO THE PHYSICAL SETUP OF ANY APPLICABLE SIGNS OR MESSAGE BOARDS.

INFORMATION SHOULD INCLUDE, BUT IS NOT LIMITED TO, ALL CONSTRUCTION ACTIVITIES THAT IMPACT OR INTERFERE WITH TRAFFIC AND SHALL LIST THE SPECIFIC LOCATION, TYPE OF WORK, ROAD STATUS, DATE AND TIME OF RESTRICTION, DURATION OF RESTRICTION, NUMBER OF LANES MAINTAINED, NUMBER OF LANES CLOSED, MINIMUM VERTICAL CLEARANCE, MINIMUM WIDTH OF DRIVABLE PAVEMENT, DETOUR ROUTES, IF APPLICABLE, AND ANY OTHER INFORMATION REQUESTED BY THE PROJECT ENGINEER.

NOTIFICATION TIME TABLE		
ITEM	DURATION OF CLOSURE	NOTICE DUE TO PERMITS AND PIO*
RAMP AND/OR ROAD CLOSURES	2 WEEKS OR GREATER	21 CALENDAR DAYS
	12 HOURS TO 2 WEEKS	14 CALENDAR DAYS
	12 HOURS OR LESS	4 BUSINESS DAYS
LANE CLOSURES AND RESTRICTIONS	2 WEEKS OR GREATER	14 CALENDAR DAYS
	LESS THAN 2 WEEKS	5 BUSINESS DAYS
START OF CONSTRUCTION AND TRAFFIC PATTERN CHANGES	N/A	14 CALENDAR DAYS

** - PRIOR TO CLOSURE DATE, UNLESS NOTED OTHERWISE*

ANY UNFORESEEN CONDITIONS NOT SPECIFIED IN THE PLANS REQUIRING TRAFFIC RESTRICTIONS SHALL ALSO BE REPORTED TO THE PROJECT ENGINEER USING THE

RIC-13-28.73
MODEL: Sheet PAPERSIZE: 34x22 (in.) DATE: 8/4/2026 TIME: 4:19:23 PM PLTDRV: OHDOT_PDF.pltcfg PENTBL: 114950_OHDOT_Pen.tbl USER: Spencer.Orr@dot.ohio.gov WORKSPACE: OHDOTCEv02 WORKSET: 114950 PRODUCT: OpenRoadsDesigner 24.00.00.205
pw:\\ohiodot-pw.bentley.com:ohiodot-pw-02\Documents\01 Active Projects\District 03\Richland\114950\400-Engineering\MOT\Sheets\114950_MN001.dgn

DESIGN AGENCY
DISTRICT 3
ENGINEERING TEAM TWO
DESIGNER STO
REVIEWER NRF 07/02/26
PROJECT ID 119450
SHEET P.6 TOTAL 29



1

W20-3-36



2

W20-2-36

M1-5-24-2



3

M4-8A-24

M1-5-24-2



4

M4-8-24
M3-1-24

M1-5-24-2



5

M4-8-24
M3-3-24

M1-5-24-2
M6-3-21



6

M4-8-24
M3-1-24

M1-5-24-2
M5-1L-21



7

M4-8-24
M3-3-24

M1-5-24-2
M5-1L-21



8

M4-8-24
M3-1-24

M1-5-24-2
M5-1R-21



9

M4-8-24
M3-3-24

M1-5-24-2
M5-1R-21



10

M4-8-24
M3-1-24

M1-5-24-2
M6-1R-21



11

M4-8-24
M3-3-24

M1-5-24-2
M6-1R-21



12

M4-8-24
M3-1-24

M1-5-24-2
M6-1-21



13

M4-8-24
M3-3-24

M1-5-24-2
M6-1-21



14

M4-8-24
M3-1-24

M1-5-24-2
M6-2-21

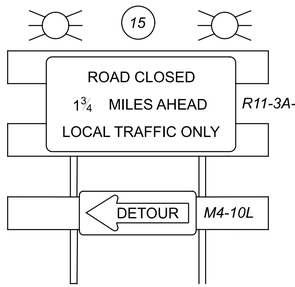

15

R11-3A-60

M4-10L

TYPE III BARRICADES
W/ FLASHING LIGHTS

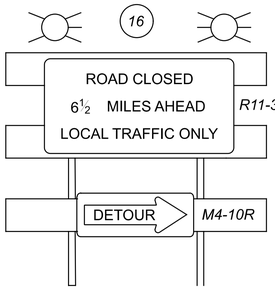

16

R11-3A-60

M4-10R

TYPE III BARRICADES
W/ FLASHING LIGHTS

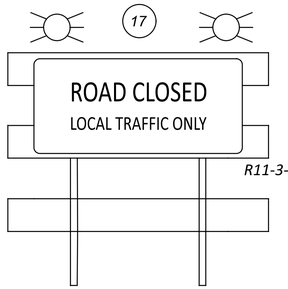

17

R11-3-66

TYPE III BARRICADES

DETAIL A

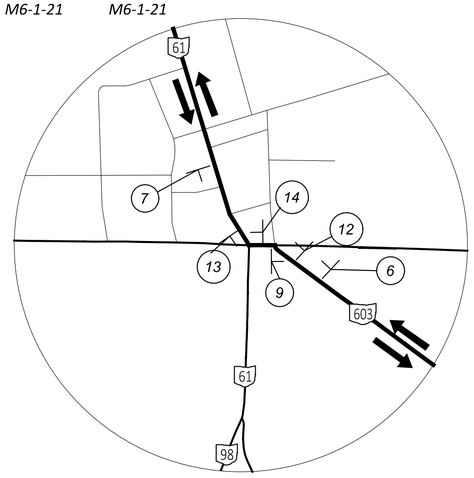

DETAIL B

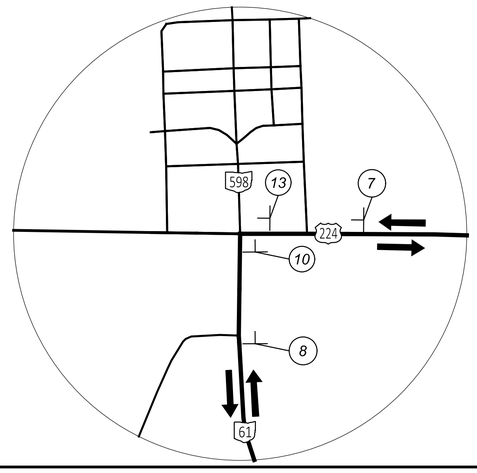

SEE DETAIL B

SEE DETAIL A

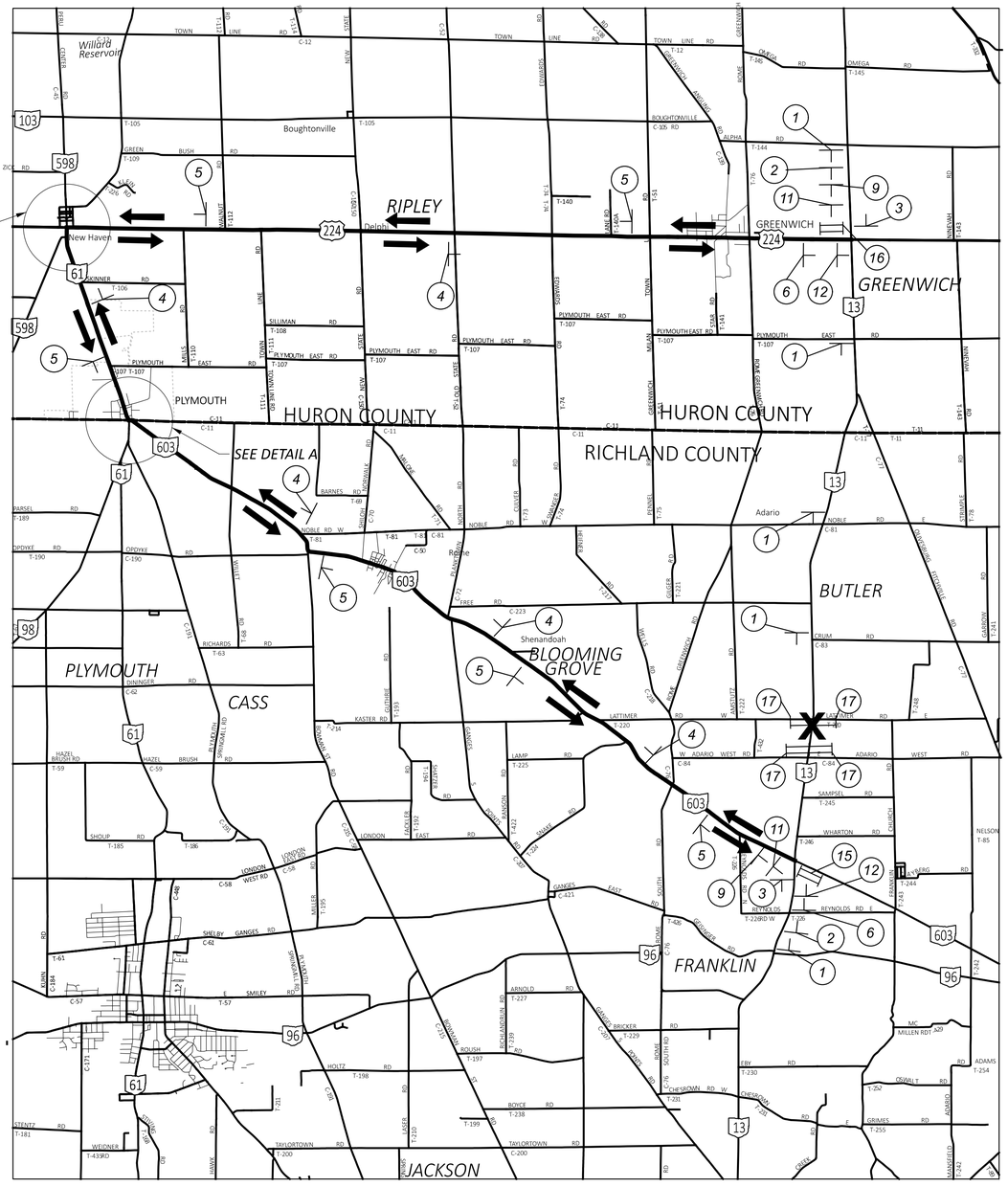

LEGEND

- X - PROJECT LOCATION
- ⇄ - OFFICIAL SIGNED DETOUR
- ‖ - GATES AND BARRICADES, AS PER MT-101.60
- ⊣ - SIGN LOCATION
- ‖ - BARRICADE LOCATION

DETOUR PLAN
RIC-13-28.73

DESIGN AGENCY
DISTRICT 3
ENGINEERING TEAM TWO

DESIGNER: STO
REVIEWER: NRF 07/02/26
PROJECT ID: 119450
SHEET: P.7 TOTAL: 29

RIC-13-28.73

MODEL: Sheet PAPERSIZE: 34x22 (in.) DATE: 8/4/2026 TIME: 4:20:00 PM PLTDRV: OHDOT_PDF.pltcfg PENTBL: 114950_OHDOT_Pen.tbl USER: Spencer.Orr@dot.ohio.gov WORKSPACE: OHDOTCEv02 WORKSET: 114950 PRODUCT: OpenRoadsDesigner 24.00.00.205
pw:\\ohiodot-pw.bentley.com:ohiodot-pw-02\Documents\01 Active Projects\District 03\Richland\114950\400-Engineering\MOT\Sheets\114950_MD001.dgn

SHEET NUMBER					PART.	ITEM	ITEM EXT	GRAND TOTAL	UNIT	DESCRIPTION	SEE SHEET NO.
P.4	P.6	P.10	P.19	RW.3	01/STR						
										ROADWAY	
		189			189	202	23000	189	SY	PAVEMENT REMOVED	
			254		254	202	35100	254	FT	PIPE REMOVED, 24" DIAMETER AND UNDER	
		450			450	202	38000	450	FT	GUARDRAIL REMOVED	
		3			3	202	42010	3	EACH	ANCHOR ASSEMBLY REMOVED, TYPE E	
		1			1	202	42040	1	EACH	ANCHOR ASSEMBLY REMOVED, TYPE T	
		47			47	203	10000	47	CY	EXCAVATION	
		345			345	203	20000	345	CY	EMBANKMENT	
		193			193	204	10000	193	SY	SUBGRADE COMPACTION	
		112.5			112.5	606	15050	112.5	FT	GUARDRAIL, TYPE MGS	
		162.5			162.5	606	15100	162.5	FT	GUARDRAIL, TYPE MGS WITH LONG POSTS	
		62.5			62.5	606	17360	62.5	FT	GUARDRAIL, TYPE MGS, LONG-SPAN	
		4			4	606	26150	4	EACH	ANCHOR ASSEMBLY, MGS TYPE E (MASH 2016)	
				2	2	623	38500	2	EACH	MONUMENT ASSEMBLY, TYPE C	
										EROSION CONTROL	
			73		73	601	32100	73	CY	ROCK CHANNEL PROTECTION, TYPE B WITH FILTER	
2					2	659	00100	2	EACH	SOIL ANALYSIS TEST	
110					110	659	00300	110	CY	TOPSOIL	
994					994	659	10000	994	SY	SEEDING AND MULCHING	
50					50	659	14000	50	SY	REPAIR SEEDING AND MULCHING	
50					50	659	15000	50	SY	INTER-SEEDING	
0.13					0.13	659	20000	0.13	TON	COMMERCIAL FERTILIZER	
0.21					0.21	659	31000	0.21	ACRE	LIME	
5.51					5.51	659	35000	5.51	MGAL	WATER	
			95		95	670	00520	95	SY	SLOPE EROSION PROTECTION MAT, TYPE B	
					5,000	832	30000	5,000	EACH	EROSION CONTROL	
										DRAINAGE	
			1.56		1.56	602	20000	1.56	CY	CONCRETE MASONRY	
			48		48	605	31100	48	FT	AGGREGATE DRAINS	
			414		414	611	09100	414	FT	21" CONDUIT, TYPE C	
			55		55	611	94720	55	FT	6' X 6' CONDUIT, TYPE A, 706.05	
			2		2	611	98510	2	EACH	CATCH BASIN, NO. 2-3	
										PAVEMENT	
		146			146	254	01000	146	SY	PAVEMENT PLANING, ASPHALT CONCRETE (3.0")	
		46			46	301	56000	46	CY	ASPHALT CONCRETE BASE, PG64-22, (449)	
		21			21	304	20000	21	CY	AGGREGATE BASE (3.0")	
		33			33	304	20000	33	CY	AGGREGATE BASE(6.0")	
		10			10	304	20000	10	CY	AGGREGATE BASE(8.0")	
		37			37	407	10000	37	GAL	TACK COAT (0.05 GAL/SY)	
		16			16	407	10000	16	GAL	TACK COAT (0.08 GAL/SY)	
		134			134	408	10001	134	GAL	PRIME COAT, AS PER PLAN (0.4 GAL/SY)	P.5
		31			31	442	22001	31	CY	ASPHALT CONCRETE SURFACE COURSE, 9.5 MM, TYPE A (449), AS PER PLAN (PG64-22)	P.5
										TRAFFIC CONTROL	
		2			2	621	54000	2	EACH	RAISED PAVEMENT MARKER REMOVED	
		6			6	626	00110	6	EACH	BARRIER REFLECTOR, TYPE 2 (BI-DIRECTIONAL)	
		1			1	630	84900	1	EACH	REMOVAL OF GROUND MOUNTED SIGN	
		0.02			0.02	642	00104	0.02	MILE	EDGE LINE, 6", TYPE 1	
		0.02			0.02	642	00300	0.02	MILE	CENTER LINE, TYPE 1	

GENERAL SUMMARY

DESIGN AGENCY
DISTRICT 3
ENGINEERING TEAM TWO

DESIGNER
STO

REVIEWER
NRF 07/02/26

PROJECT ID
114950

SHEET P.8 | TOTAL 29

RIC-13-28.73

MODEL: Sheet PAPERSIZE: 34x22 (in.) DATE: 8/5/2026 TIME: 10:56:16 AM PLTDRV: OHDOT_PDF.pltcfg PENTBL: 114950_OHDOT_Pen.tbl USER: Spencer.Orr@dot.ohio.gov WORKSPACE: OHDOTCEv02 WORKSET: 114950 PRODUCT: OpenRoadsDesigner 24.00.00.205
pw:\\ohiodot-pw.bentley.com:ohiodot-pw-02\Documents\01 Active Projects\District 03\Richland\114950\400-Engineering\Roadway\Sheets\114950_GG001.dgn

SHEET NUMBER					PART.	ITEM	ITEM EXT	GRAND TOTAL	UNIT	DESCRIPTION	SEE SHEET NO.
P.4	P.6	P.10	P.19	RW.3	01/STR						
										STRUCTURE 20 FOOT SPAN AND UNDER (RIC-13-28.73)	
			LS		LS	202	11001	LS		STRUCTURE REMOVED, AS PER PLAN	P.4
			LS		LS	503	11100	LS		COFFERDAMS AND EXCAVATION BRACING	
			LS		LS	503	21300	LS		UNCLASSIFIED EXCAVATION	
			4,482		4,482	509	10000	4,482	LB	EPOXY COATED STEEL REINFORCEMENT	
			11		11	511	46010	11	CY	CLASS QC1 CONCRETE, RETAINING/WINGWALL NOT INCLUDING FOOTING	
			18		18	511	46510	18	CY	CLASS QC1 CONCRETE, FOOTING	
			1		1	511	46610	1	CY	CLASS QC1 CONCRETE, HEADWALL	
			49		49	512	10100	49	SY	SEALING OF CONCRETE SURFACES (EPOXY-URETHANE)	
			45		45	512	33000	45	SY	TYPE 2 WATERPROOFING	
			34		34	516	13600	34	SF	1" PREFORMED EXPANSION JOINT FILLER	
			LS		LS	518	21230	LS		POROUS BACKFILL WITH GEOTEXTILE FABRIC	
										MAINTENANCE OF TRAFFIC	
	LS				LS	614	12420	LS		DETOUR SIGNING	
	2				2	614	18601	4	SNMT	PORTABLE CHANGEABLE MESSAGE SIGN, AS PER PLAN	P.6
										INCIDENTALS	
					LS	614	11000	LS		MAINTAINING TRAFFIC	
					8	619	16010	8	MNTH	FIELD OFFICE, TYPE B	
					LS	623	10000	LS		CONSTRUCTION LAYOUT STAKES AND SURVEYING	
					LS	624	10000	LS		MOBILIZATION	

GENERAL SUMMARY

RIC-13-28.73

MODEL: Sheet 2 PAPERSIZE: 34x22 (in.) DATE: 8/4/2026 TIME: 4:20:08 PM PLTDRV: OHDOT_PDF.pltcfg PENTBL: 114950_OHDOT_Pen.tbl USER: Spencer.Orr@dot.ohio.gov WORKSPACE: OHDOTCEv02 WORKSET: 114950 PRODUCT: OpenRoadsDesigner 24.00.00.205
pw:\\ohiodot-pw.bentley.com:ohiodot-pw-02\Documents\01 Active Projects\District 03\Richland\114950\400-Engineering\Roadway\Sheets\114950_GG001.dgn

DESIGN AGENCY
DISTRICT 3
ENGINEERING TEAM TWO

DESIGNER
STO

REVIEWER
NRF 07/02/26

PROJECT ID
114950

SHEET P.9 | TOTAL 29

REF NO.	SHEET NO.	STATION TO STATION				202 PAVEMENT REMOVED SY	202 GUARDRAIL REMOVED FT	202 ANCHOR ASSEMBLY REMOVED, TYPE E EACH	202 ANCHOR ASSEMBLY REMOVED, TYPE T EACH	203 EXCAVATION CY	203 EMBANKMENT CY	204 SUBGRADE COMPACTION SY	254 PAVEMENT PLANING, ASPHALT CONCRETE (3.0") SY	301 ASPHALT CONCRETE BASE, PG64-22, (449) (9.0") CY	304 AGGREGATE BASE (3.0") CY	304 AGGREGATE BASE(6.0") CY	304 AGGREGATE BASE(8.0") CY	407 TACK COAT (0.05 GAL/SY) GAL	407 TACK COAT (0.08 GAL/SY) GAL	408 PRIME COAT, AS PER PLAN (0.4 GAL/SY) GAL	442 ASPHALT CONCRETE SURFACE COURSE, 9.5 MM, TYPE A (449), AS PER PLAN (3.0") CY	606 GUARDRAIL, TYPE MGS FT	606 GUARDRAIL, TYPE MGS WITH LONG POSTS FT	606 GUARDRAIL, TYPE MGS, LONG-SPAN FT	606 ANCHOR ASSEMBLY, MGS TYPE E (MASH 2016) EACH	626 BARRIER REFLECTOR, TYPE 2 (BI-DIRECTIONAL) EACH
			TO																						
		199+15.00	TO	202+91.55			450	3	1	47	345									134		112.5	162.5	62.5	4	6
		199+52.86 RT	TO	199+64.79 RT											1											
		199+64.79	TO	200+50.00											7											
		200+50.00	TO	200+75.00									73		2			5	8		8					
		200+75.00	TO	201+25.00		189						193		46		33	10	27			15					
		201+25.00	TO	201+50.00									73		2			5	8		8					
		201+50.00	TO	202+26.38											6											
		202+26.38 LT	TO	202+91.55 LT											3											
TOTALS CARRIED TO GENERAL SUMMARY						189	450	3	1	47	345	193	146	46	21	33	10	37	16	134	31	112.5	162.5	62.5	4	6

REF NO.	SHEET NO.	STATION TO STATION				621 RAISED PAVEMENT MARKER REMOVED EACH	642 EDGE LINE, 6", TYPE 1 MILE	642 CENTER LINE, TYPE 1 MILE	630 REMOVAL OF GROUND MOUNTED SIGN AND DISPOSAL EACH
			TO						
		200+50.00	TO	201+50.00		2	0.02	0.02	1
TOTALS CARRIED TO GENERAL SUMMARY						2	0.02	0.02	1

ROADWAY SUBSUMMARIES

DESIGN AGENCY
DISTRICT 3
ENGINEERING TEAM TWO

DESIGNER
STO

REVIEWER
NRF 07/02/26

PROJECT ID
114950

SHEET P.10 TOTAL 29

RIC-13-28.73

MODEL: Sheet PAPERSIZE: 34x22 (in.) DATE: 8/4/2026 TIME: 4:20:13 PM PLTDRV: OHDOT_PDF.pltcfg PENTBL: 114950_OHDOT_Pen.tbl USER: Spencer.Orr@dot.ohio.gov WORKSPACE: OHDOTCEv02 WORKSET: 114950 PRODUCT: OpenRoadsDesigner 24.00.00.205
pw:\\ohiodot-pw.bentley.com:ohiodot-pw-02\Documents\01 Active Projects\District 03\Richland\114950\400-Engineering\Roadway\Sheets\114950_GS001.dgn

PLAN AND PROFILE
RIC-13-28.73

LEGEND

FOR COORDINATE CONTROL TABLE, SEE R/W PLAN SHEET RW.3

DND - DO NOT DISTURB
TBR - TO BE RELOCATED
202 - TO BE REMOVED
- TOP MOUNTED GUARDRAIL AS PER MGS 2.1 DETAIL #1
- ROCK CHANNEL PROTECTION, TYPE B WITH FILTER
- SLOPE EROSION PROTECTION MAT, TYPE B
- WETLAND
- RESURFACING

HORIZONTAL SCALE IN FEET
0 10 20 40

ANCHOR ASSEMBLY, MGS TYPE E 50'-0"
162'-6" GUARDRAIL, TYPE MGS WITH LONG POSTS
ANCHOR ASSEMBLY, MGS TYPE E 50'-0"

UNAMED TRIBUTARY TO SHIPP CREEK
WETLAND 2
OT STA. 1+71.00
STA. 1+71.00, 0.00' RT., ℄ CHANNEL
STA. 201+18.62, 65.25' LT., ℄ CONST. RIC-13
STA. 199+15.00, 0.00' RT., ℄ CONST. SR 13
STA. 1514+15.00, 2.34' LT., ℄ R/W
BEGIN PROJECT STA. 200+75.00 ℄ CONST. SR13
FAN: E240925
END PROJECT STA. 201+25.00 ℄ CONST. SR13
FAN: E240925
PR. 21" CONDUIT, TYPE C STA 200+96.50 29.02' LT
PR. HW-2.1/2.2
36' EX. 18" CPP (202) STA 200+93.32 30.93' LT
STA. 200+99.90 28.30' LT
PR. 21" CONDUIT, TYPE C STA 201+11.89 39.19' LT
PR. HW-2.1/2.2
105' EX. 18" CPP (202) STA 201+43.79 24.55' LT
END WORK STA. 202+91.55
EX. UTILITY POLE STA 198+85.92 25.62' LT
PR. R/W
STA. 199+79.80 OFF. 22.50' LT.
PR. CB-2-4 STA. 200+57.74 29.10' LT
EX. 18" CPP
PR. HW-2.1/2.2 180' PR. 21" CONDUIT, TYPE C STA. 202+91.55 25.67' LT.
EX. UTILITY POLE STA 204+47.13 25.29' LT
POT STA. 199+00.00
PI STA. 200+00.00
PI STA. 201+50.00
POT STA. 202+95.01
EX. 18" CPP (DND)
PR. HW-1.1
7'-2" ##
EX. FIELD DRIVE
TYPE E ANCHOR (202)
200'± EX. GUARDRAIL (202)
40' PR. 21" CONDUIT, TYPE C STA 200+58.97 29.94' LT
TYPE T ANCHOR (202)
EX. 54" CMP (202)
PR. CONST. LIMITS
STA. 202+54.80 22.50' LT.
℄ CONST. RIC-13
199 1514 150.00' N07°57'15"E
200 1515 105.00' N08°00'33"E
201 50.01' N07°43'26"E
202 1517
203 195.08 N07°44'35"E 1519
EX. ℄ R/W
EX. UTILITY POLE (TO BE RELOCATED) STA 201+69.04 26.73' LT
171' PR. 21" CONDUIT, TYPE C
1" PR. HW-2.1/2.2
STA. 199+37.76 OFF. 23.50' RT
STA. 199+19.84 OFF. 27.11' RT
BEGIN RESURFACING STA. 200+50.00
18'-9"
PR. HW-1.1
25' EX. 18" CPP (202) STA. 201+01.37 30.29' RT.
18" CPP (202) STA 201+27.93 29.55' RT
TYPE E ANCHOR (202) 250'± EX. GUARDRAIL (202)
TYPE E ANCHOR (202)
EX. FIELD DRIVE
PR. CB-2-3 STA 201+26.42 29.59' RT
87' EX. 18" CPP (202) STA 199+99.66 27.21' RT
STA. 200+86.94 30.93' RT.
24' PR. 21" CONDUIT, TYPE C STA 201+25.29 30.56' RT
STA. 202+12.76 23.50' RT
EX. UTILITY POLE (TBR) STA 200+25.98 26.02' RT
EX. UTILITY POLE (TO BE RELOCATED) STA 202+06.05 23.84' RT
EX. UTILITY POLE STA 203+92.08 24.06' RT
BEGIN WORK STA. 199+15.00
PR. 21" CONDUIT, TYPE C STA. 200+90.47 38.98' RT
PR. 72" X 72" REINFORCED CONCRETE BOX CULVERT, TYPE A
EX. 18" CPP
PR. HW-2.1/2.2
END RESURFACING STA. 201+50.00
STA. 201+02.58 38.33' RT.
PR. TEMP. R/W
WETLAND 1
STA. 200+96.20 26.57' RT
STA. 202+91.55, 0.00' RT, ℄ CONST. SR 13 = STA. 1517+91.48, 2.58' LT., ℄ R/W
POT STA. 0+00.00
STA. 0+29.17, 84.34' RT., ℄ CHANNEL
STA. 201+83.16, 76.76' RT., ℄ CONST. RIC-13
EX. FIELD DRIVE
EX. DRIVE PIPE (DND)

ANCHOR ASSEMBLY, MGS TYPE E 50'-0" | GUARDRAIL, TYPE MGS 75'-0" | GUARDRAIL, TYPE MGS, LONG-SPAN 62'-6" | GUARDRAIL, TYPE MGS 37'-6" | ANCHOR ASSEMBLY, MGS TYPE E 50'-0"

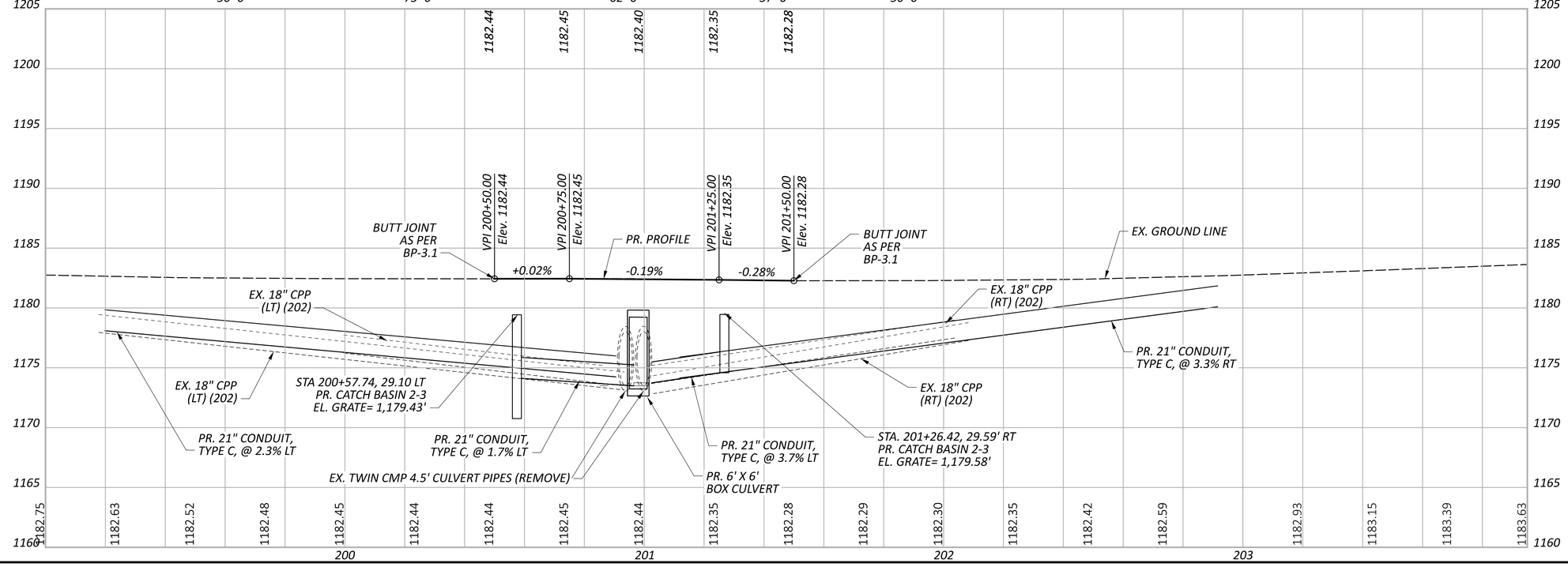

DESIGN AGENCY
DISTRICT 3
ENGINEERING TEAM TWO
DESIGNER STO
REVIEWER NRF 07/02/26
PROJECT ID 119450
SHEET P.11 TOTAL 29

RIC-13-28.73

MODEL: CLP_RIC14 - Plan 1 [Sheet] PAPERSIZE: 34x22 (in.) DATE: 8/4/2026 TIME: 4:20:21 PM PLTDRV: OHDOT_PDF.pltcfg PENTBL: 114950_OHDOT_Pen.tbl USER: Spencer.Orr@dot.ohio.gov WORKSPACE: OHDOTCEv02 WORKSET: 114950 PRODUCT: OpenRoadsDesigner 24.00.00.205
pw:\\ohiodot-pw.bentley.com:ohiodot-pw-02\Documents\01 Active Projects\District 03\Richland\114950\400-Engineering\Roadway\Sheets\114950_GP001.dgn

MODEL: CLP_RIC13 - 199+15.00 [Sheet] PAPERSIZE: 34x22 (in.) DATE: 8/4/2026 TIME: 4:20:30 PM PLTDRV: OHDOT_PDF.pltcfg PENTBL: 114950_OHDOT_Pen.tbl USER: Spencer.Orr@dot.ohio.gov WORKSPACE: OHDOTCEv02 WORKSET: 114950 PRODUCT: OpenRoadsDesigner 24.00.00.205
pw:\\ohiodot-pw.bentley.com:ohiodot-pw-02\Documents\01 Active Projects\District 03\Richland\114950\400-Engineering\Roadway\Sheets\114950_XS001.dgn

RIC-13-28.73

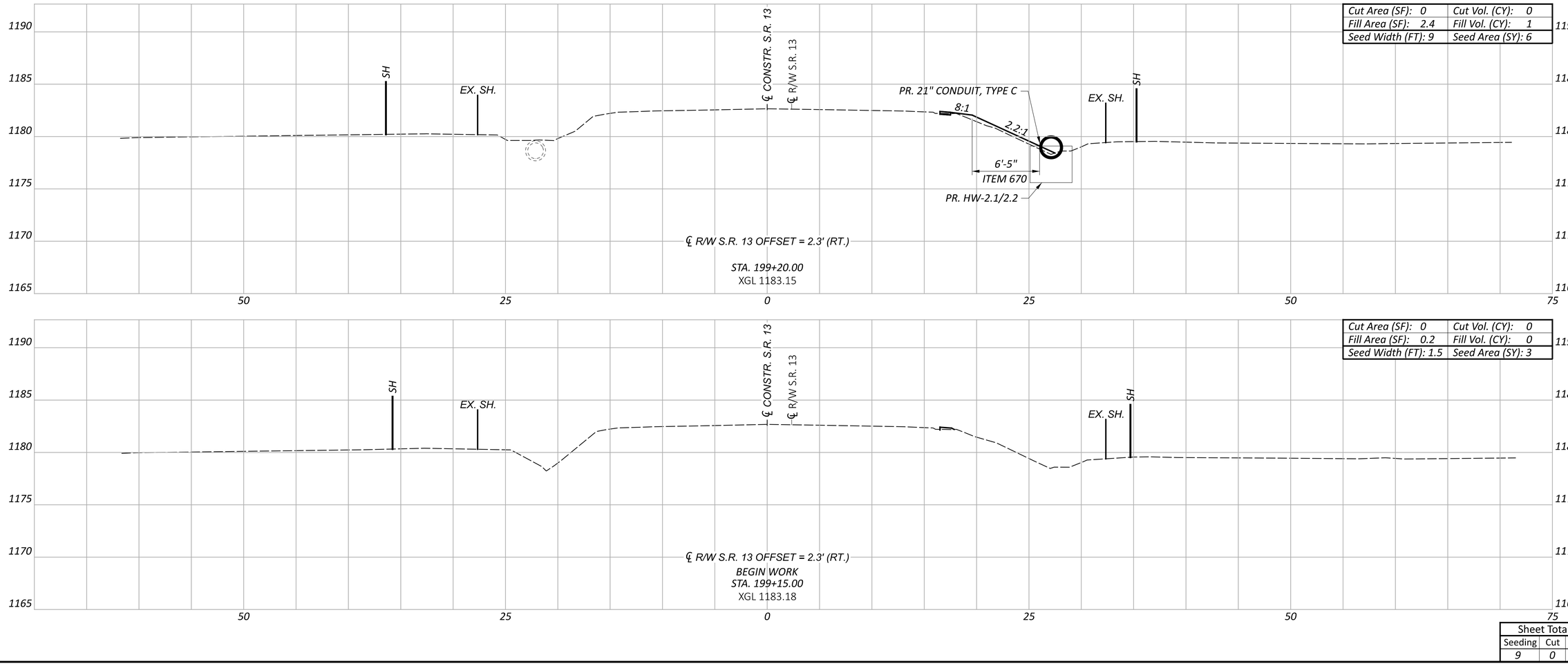

CROSS SECTIONIS
STA. 199+15.00 TO STA. 199+25.00

Sheet Totals		
Seeding	Cut	Fill
9	0	1

DESIGN AGENCY
DISTRICT 3
ENGINEERING TEAM TWO

DESIGNER
STO

REVIEWER
NRF 07/02/26

PROJECT ID
114950

SHEET P.12 TOTAL 29

MODEL: CLP_RIC13 - 199+52.86 [Sheet] PAPERSIZE: 34x22 (in.) DATE: 8/4/2026 TIME: 4:20:31 PM PLTDRV: OHDOT_PDF.pltcfg PENTBL: 114950_OHDOT_Pen.tbl USER: Spencer.Orr@dot.ohio.gov WORKSPACE: OHDOTCEv02 WORKSET: 114950 PRODUCT: OpenRoadsDesigner 24.00.00.205
pw:\\ohiodot-pw.bentley.com:ohiodot-pw-02\Documents\01 Active Projects\District 03\Richland\114950\400-Engineering\Roadway\Sheets\114950_XS001.dgn

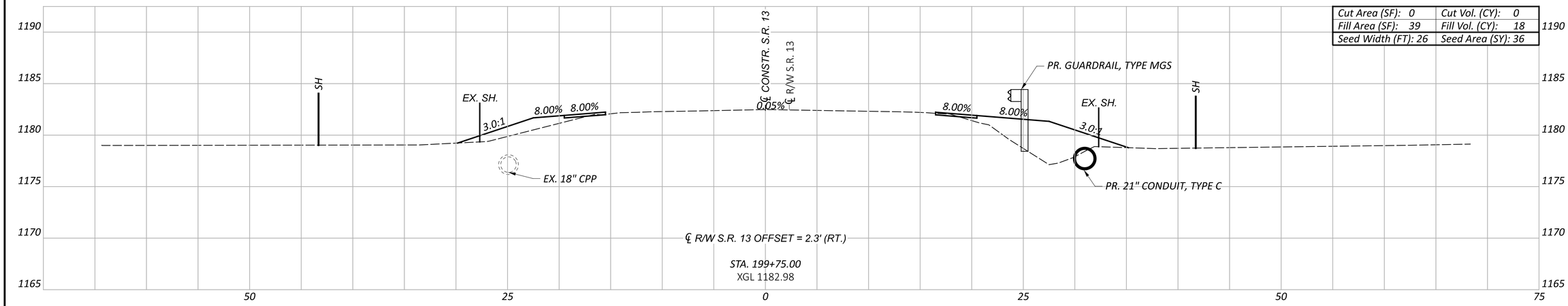

Cut Area (SF): 0	Cut Vol. (CY): 0
Fill Area (SF): 39	Fill Vol. (CY): 18
Seed Width (FT): 26	Seed Area (SY): 36

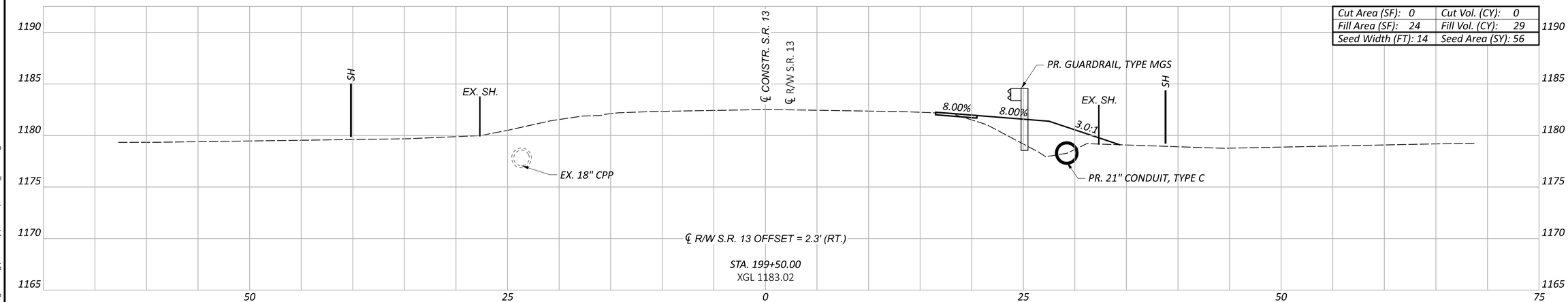

Cut Area (SF): 0	Cut Vol. (CY): 0
Fill Area (SF): 24	Fill Vol. (CY): 29
Seed Width (FT): 14	Seed Area (SY): 56

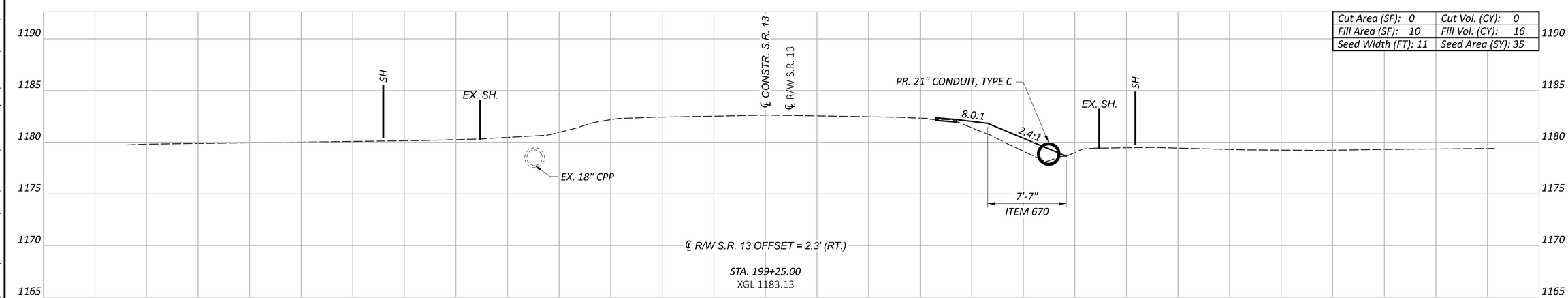

Cut Area (SF): 0	Cut Vol. (CY): 0
Fill Area (SF): 10	Fill Vol. (CY): 16
Seed Width (FT): 11	Seed Area (SY): 35

Sheet Totals		
Seeding	Cut	Fill
127	0	63

CROSS SECTIONS
STA. 199+25.00 TO STA. 199+75.00

DESIGN AGENCY
DISTRICT 3
ENGINEERING TEAM TWO

DESIGNER
STO

REVIEWER
NRF 07/02/26

PROJECT ID
119450

SHEET P.13 TOTAL 29

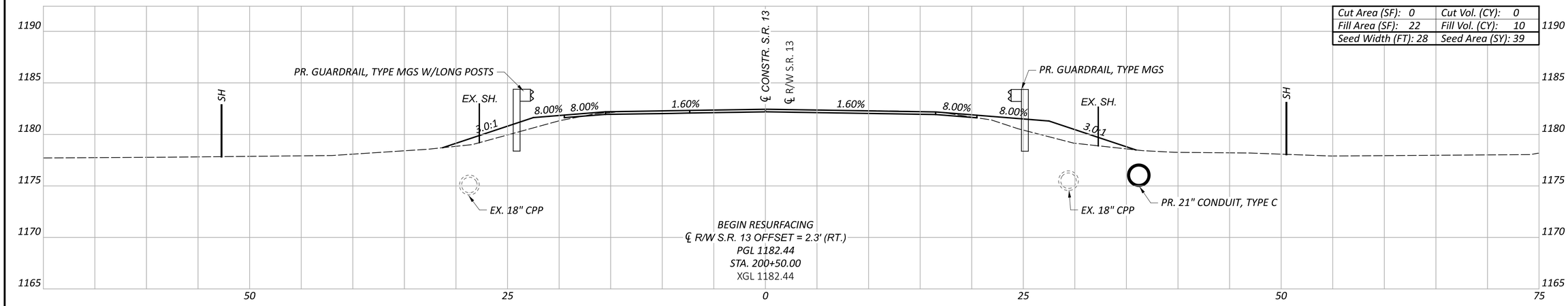

Cut Area (SF): 0	Cut Vol. (CY): 0
Fill Area (SF): 22	Fill Vol. (CY): 10
Seed Width (FT): 28	Seed Area (SY): 39

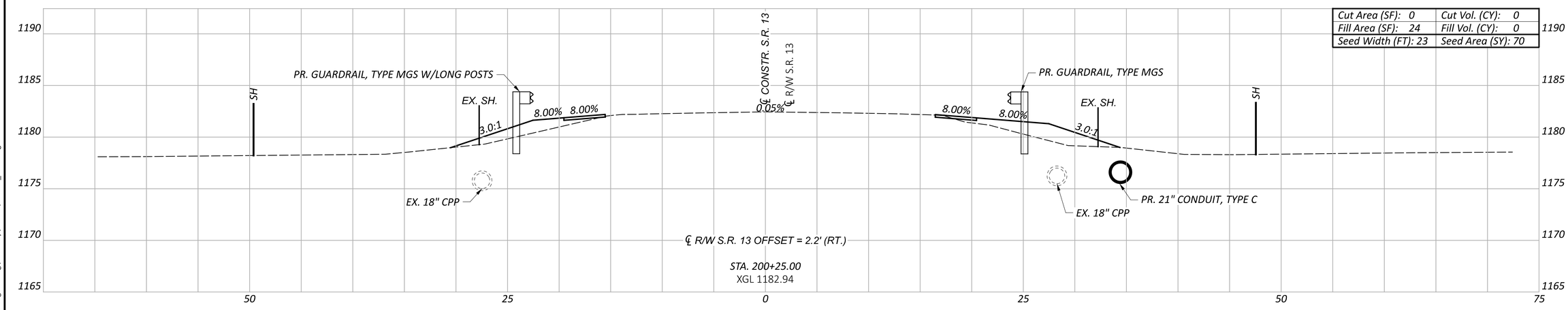

Cut Area (SF): 0	Cut Vol. (CY): 0
Fill Area (SF): 24	Fill Vol. (CY): 0
Seed Width (FT): 23	Seed Area (SY): 70

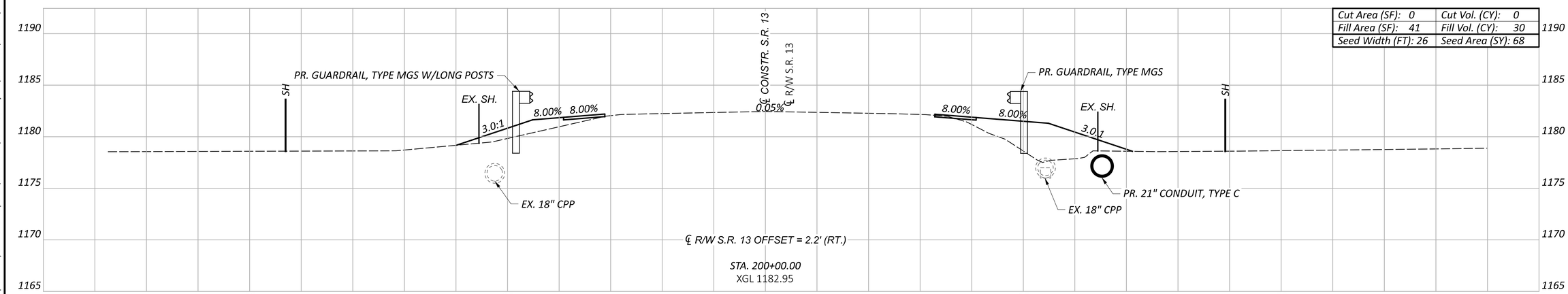

Cut Area (SF): 0	Cut Vol. (CY): 0
Fill Area (SF): 41	Fill Vol. (CY): 30
Seed Width (FT): 26	Seed Area (SY): 68

Sheet Totals		
Seeding	Cut	Fill
235	15	53

CROSS SECTIONS
STA. 200+00.00 TO 200+50.00

DESIGN AGENCY
DISTRICT 3
ENGINEERING TEAM TWO

DESIGNER
STO

REVIEWER
NRF 07/02/26

PROJECT ID
119450

SHEET P.14 TOTAL 29

RIC-13-28.73

MODEL: CLP_RIC13 - 200+00.00 [Sheet] PAPERSIZE: 34x22 (in.) DATE: 8/4/2026 TIME: 4:20:33 PM PLTDRV: OHDOT_PDF.pltcfg PENTBL: 114950_OHDOT_Pen.tbl USER: Spencer.Orr@dot.ohio.gov WORKSPACE: OHDOTCEv02 WORKSET: 114950 PRODUCT: OpenRoadsDesigner 24.00.00.205
pw:\\ohiodot-pw.bentley.com:ohiodot-pw-02\Documents\01 Active Projects\District 03\Richland\114950\400-Engineering\Roadway\Sheets\114950_XS001.dgn

MODEL: CLP_RIC13 - 200+75.00 [Sheet] PAPERSIZE: 34x22 (in.) DATE: 8/4/2026 TIME: 4:20:34 PM PLTDRV: OHDOT_PDF.pltcfg PENTBL: 114950_OHDOT_Pen.tbl USER: pw:\\ohiodot-pw.bentley.com:ohiodot-pw-02\Documents\01 Active Projects\District 03\Richland\114950\400-Engineering\Roadway\Sheets\114950_XS001.dgn

RIC-13-28.73

CROSS SECTIONS
STA. 200+75.00 TO 201+00.00

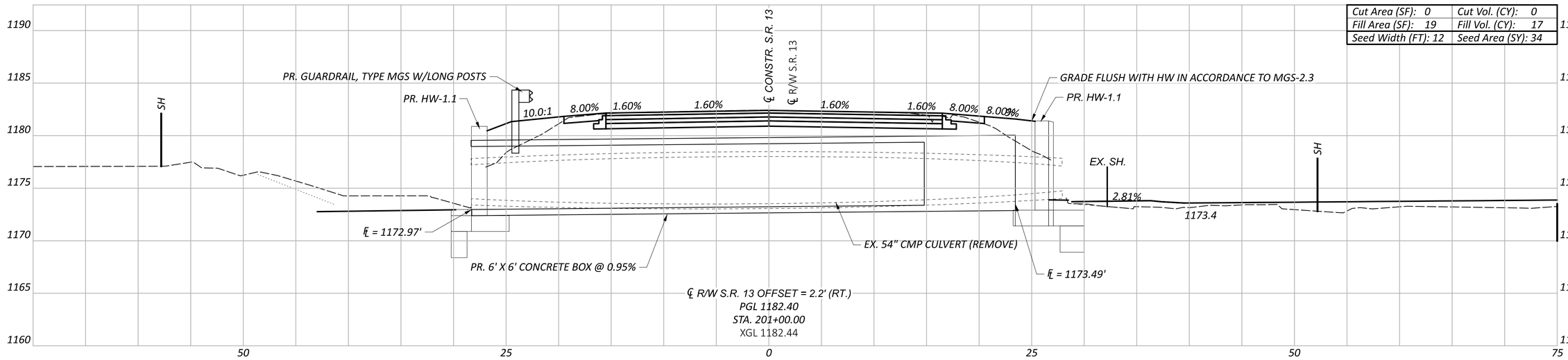

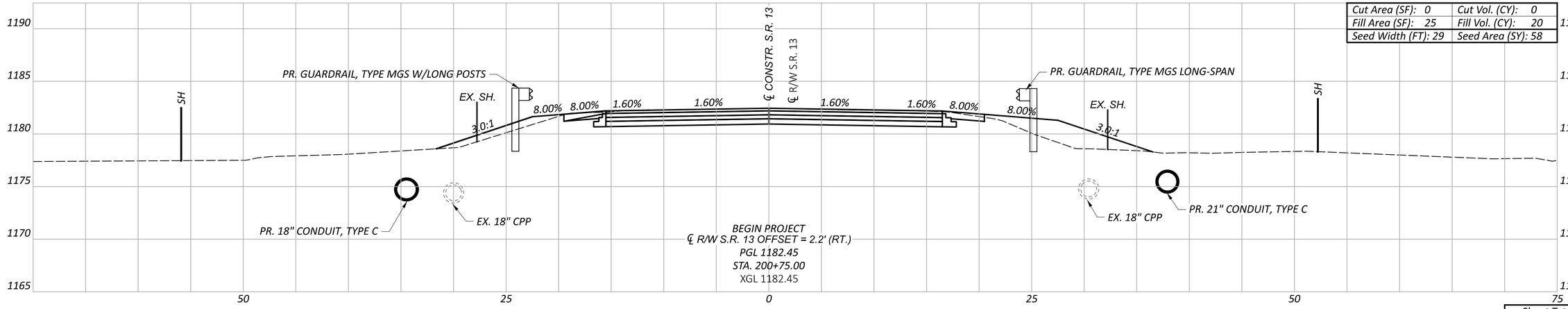

Sheet Totals		
Seeding	Cut	Fill
92	0	37

DESIGN AGENCY
DISTRICT 3
ENGINEERING TEAM TWO

DESIGNER
STO

REVIEWER
NRF 07/02/26

PROJECT ID
114950

SHEET P.15 TOTAL 29

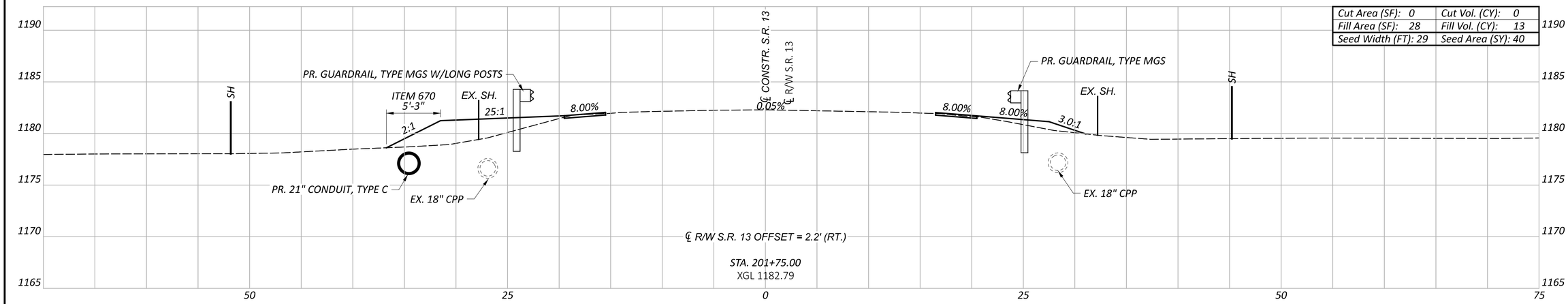

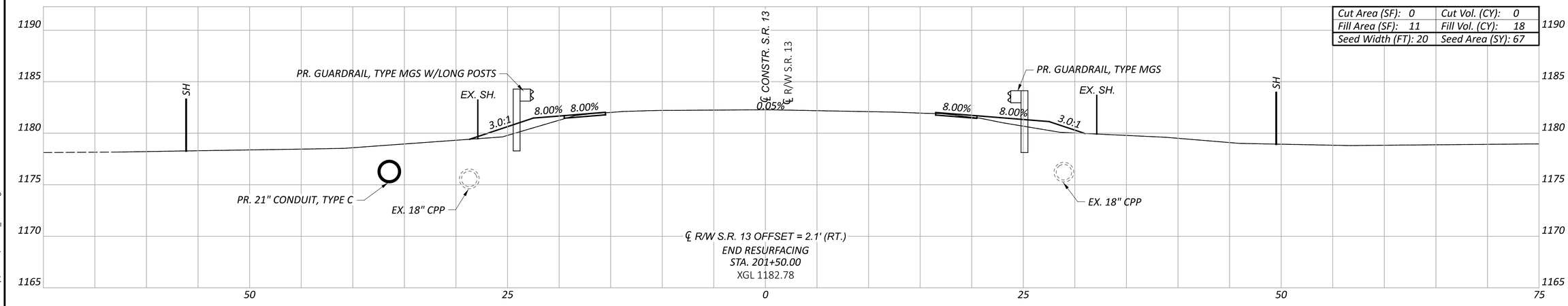

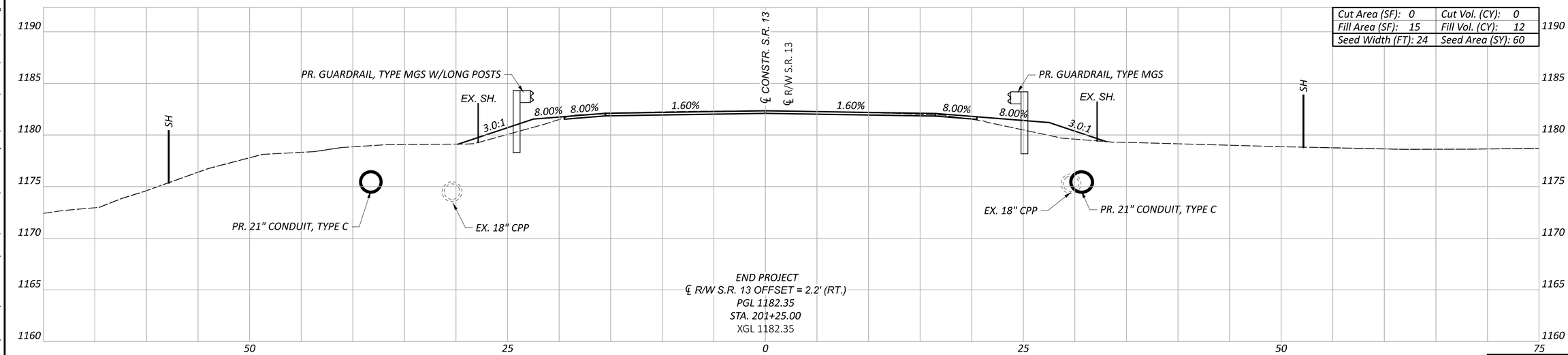

CROSS SECTIONS
STA. 201+25.00 TO 201+75.00

RIC-13-28.73

MODEL: CLP_RIC13 - 201+25.00 [Sheet] PAPERSIZE: 34x22 (in.) DATE: 8/4/2026 TIME: 4:20:36 PM PLTDRV: OHDOT_PDF.pltcfg PENTBL: 114950_OHDOT_Pen.tbl USER: pw:\\ohiodot-pw.bentley.com:ohiodot-pw-02\Documents\01 Active Projects\District 03\Richland\114950\400-Engineering\Roadway\Sheets\114950_XS001.dgn
USER: Spencer.Orr@dot.ohio.gov WORKSPACE: OHDOTCEv02 WORKSET: 114950 PRODUCT: OpenRoadsDesigner 24.00.00.205

Sheet Totals		
Seeding	Cut	Fill
167	0	43

DESIGN AGENCY
DISTRICT 3
ENGINEERING TEAM TWO

DESIGNER
STO

REVIEWER
NRF 07/02/26

PROJECT ID
119450

SHEET P.16 TOTAL 29

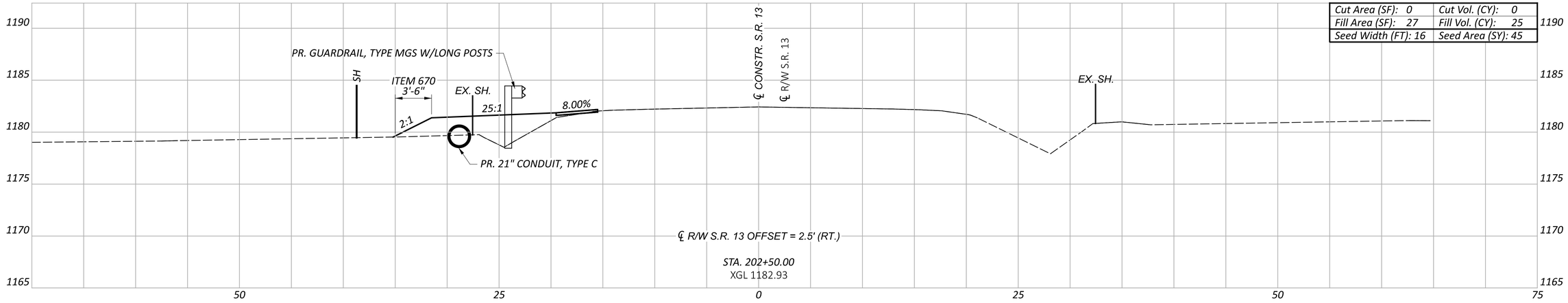

Cut Area (SF): 0	Cut Vol. (CY): 0
Fill Area (SF): 27	Fill Vol. (CY): 25
Seed Width (FT): 16	Seed Area (SY): 45

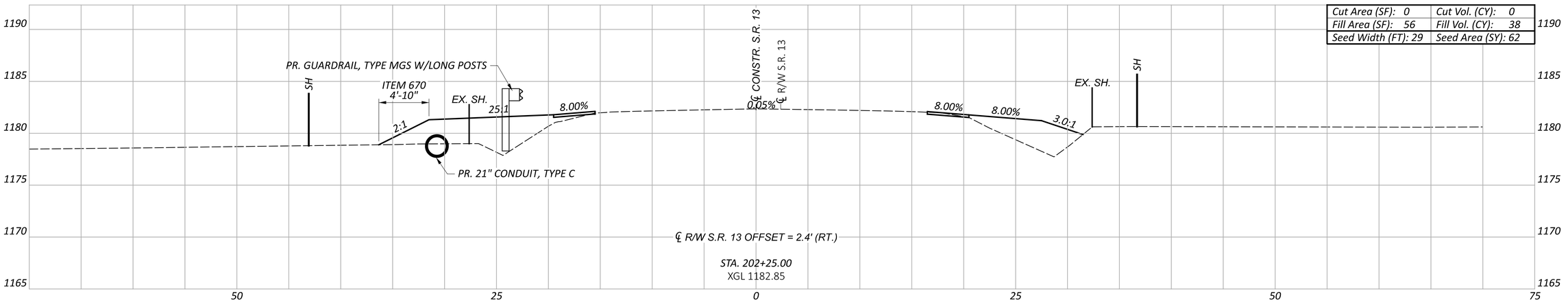

Cut Area (SF): 0	Cut Vol. (CY): 0
Fill Area (SF): 56	Fill Vol. (CY): 38
Seed Width (FT): 29	Seed Area (SY): 62

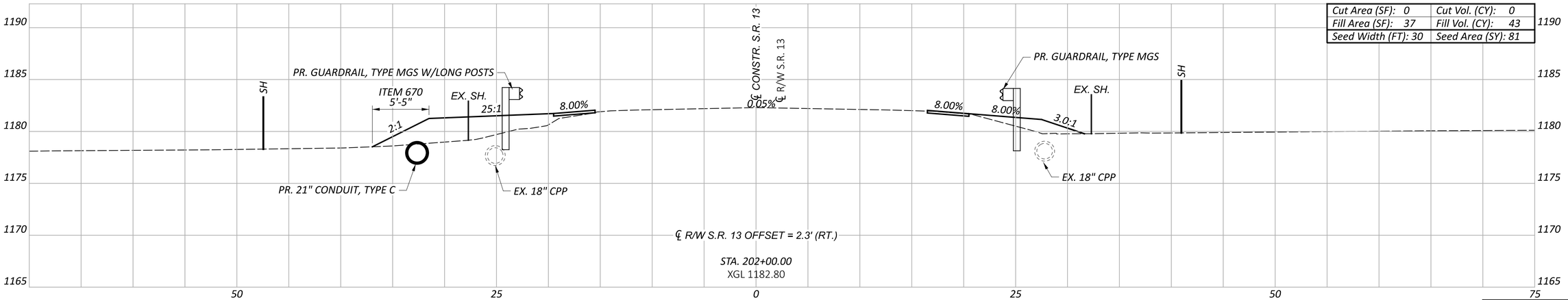

Cut Area (SF): 0	Cut Vol. (CY): 0
Fill Area (SF): 37	Fill Vol. (CY): 43
Seed Width (FT): 30	Seed Area (SY): 81

CROSS SECTIONS
STA. 202+00.00 TO 202+50.00

Sheet Totals		
Seeding	Cut	Fill
188	0	106

DESIGN AGENCY
DISTRICT 3
ENGINEERING TEAM TWO

DESIGNER: STO

REVIEWER: NRF 07/02/26

PROJECT ID: 119450

SHEET: P.17 TOTAL: 29

RIC-13-28.73

MODEL: CLP_RIC13 - 202+00.00 [Sheet] PAPERSIZE: 34x22 (in.) DATE: 8/4/2026 TIME: 4:20:37 PM PLTDRV: OHDOT_PDF.pltcfg PENTBL: 114950_OHDOT_Pen.tbl USER: Spencer.Orr@dot.ohio.gov WORKSPACE: OHDOTCEv02 WORKSET: 114950 PRODUCT: OpenRoadsDesigner 24.00.00.205
pw:\\ohiodot-pw.bentley.com:ohiodot-pw-02\Documents\01 Active Projects\District 03\Richland\114950\400-Engineering\Roadway\Sheets\114950_XS001.dgn

MODEL: CLP_RIC13 - 202+75.00-1 [Sheet] PAPERSIZE: 34x22 (in.) DATE: 8/4/2026 TIME: 4:20:39 PM PLTDRV: OHDOT_PDF.pltcfg PENTBL: 114950_OHDOT_Pen.tbl USER: Spencer.Orr@dot.ohio.gov WORKSPACE: OHDOTCEv02 WORKSET: 114950 PRODUCT: OpenRoadsDesigner 24.00.00.205
pw:\\ohiodot-pw.bentley.com:ohiodot-pw-02\Documents\01 Active Projects\District 03\Richland\114950\d00-Engineering\Roadway\Sheets\114950_XS001.dgn

RIC-13-28.73

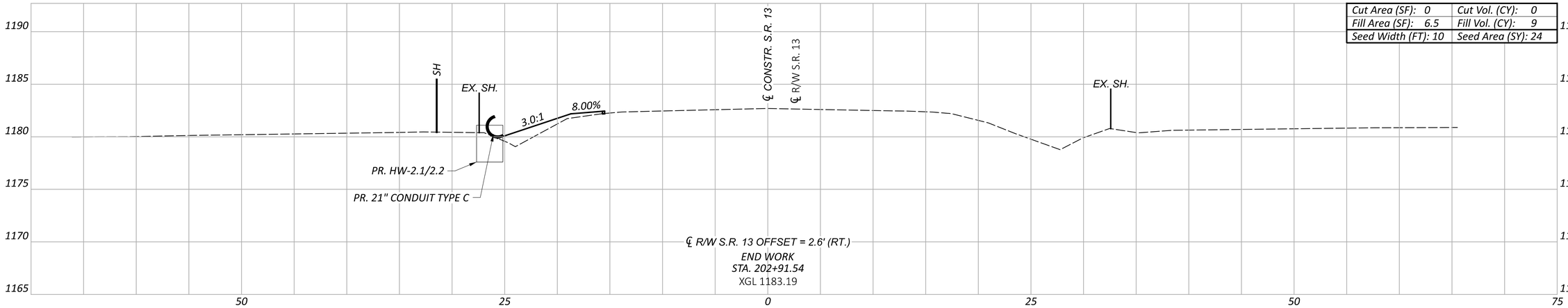

Cut Area (SF): 0	Cut Vol. (CY): 0
Fill Area (SF): 6.5	Fill Vol. (CY): 9
Seed Width (FT): 10	Seed Area (SY): 24

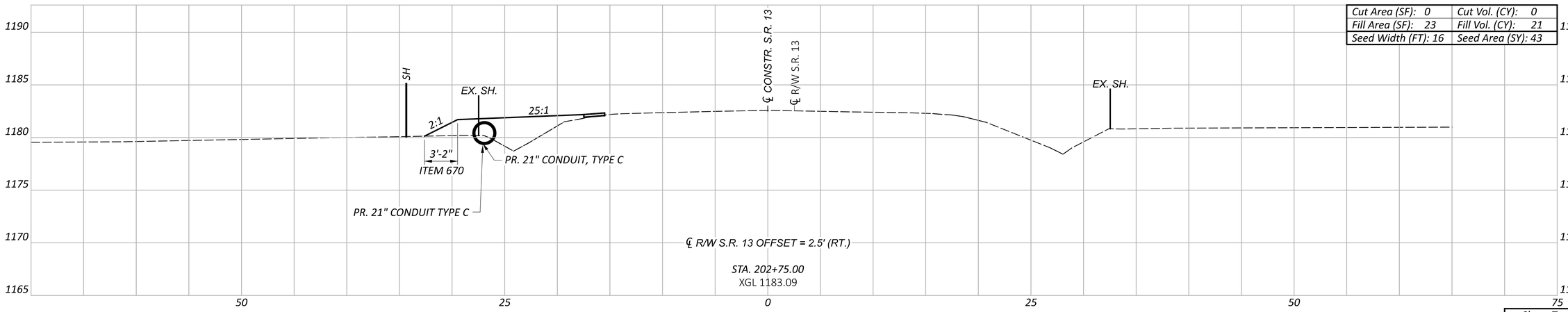

Cut Area (SF): 0	Cut Vol. (CY): 0
Fill Area (SF): 23	Fill Vol. (CY): 21
Seed Width (FT): 16	Seed Area (SY): 43

Sheet Totals		
Seeding	Cut	Fill
67	0	30

CROSS SECTIONS
STA. 202+75.00 TO STA. 202+83.16

DESIGN AGENCY
DISTRICT 3
ENGINEERING TEAM TWO

DESIGNER
STO

REVIEWER
NRF 07/02/26

PROJECT ID
119450

SHEET P.18 | TOTAL 29

REF NO.	SHEET NO.	STATION TO STATION	202	202	503	503	509	511	511	511	512	512	516	518	601	602	605	611	611	611	670		
			STRUCTURE REMOVED, AS PER PLAN	PIPE REMOVED, 24" DIAMETER AND UNDER	COFFERDAMS AND EXCAVATION BRACING	UNCLASSIFIED EXCAVATION	EPOXY COATED STEEL REINFORCEMENT	CLASS QC1 CONCRETE, RETAINING/WINGWALL NOT INCLUDING FOOTING	CLASS QC1 CONCRETE, FOOTING	CLASS QC1 CONCRETE, HEADWALL	SEALING OF CONCRETE SURFACES (EPOXY-URETHANE)	TYPE 2 WATERPROOFING	1" PREFORMED EXPANSION JOINT FILLER	POROUS BACKFILL WITH GEOTEXTILE FABRIC	ROCK CHANNEL PROTECTION, TYPE B WITH FILTER	CONCRETE MASONRY	AGGREGATE DRAINS	21" CONDUIT, TYPE C	6' X 6' CONDUIT, TYPE A, 706.05	CATCH BASIN, NO. 2-3	SLOPE EROSION PROTECTION MAT, TYPE B		
				FT			LB	SY	CY	CY	SY	SY	SF		CY	CY	FT	FT	FT	EACH	SY		
		TO																					
			LS	254	LS	LS	4482	11	18	1	49	45	34	LS	73	1.56	48	414	55	2	95		
TOTALS CARRIED TO GENERAL SUMMARY			LS	254	LS	LS	4482	11	18	1	49	45	34	LS	73	1.56	48	414	55	2	95		

DRAINAGE SUBSUMMARY

RIC-13-28.73

MODEL: Sheet PAPERSIZE: 34x22 (in.) DATE: 8/4/2026 TIME: 4:20:45 PM PLTDRV: OHDOT_PDF.pltcfg PENTBL: 114950_OHDOT_Pen.tbl USER: Spencer.Orr@dot.ohio.gov WORKSPACE: OHDOTCEv02 WORKSET: 114950 PRODUCT: OpenRoadsDesigner 24.00.00.205
pw:\\ohiodot-pw.bentley.com:ohiodot-pw-02\Documents\01 Active Projects\District 03\Richland\114950\400-Engineering\Drainage\Sheets\114950_DS001.dgn

DESIGN AGENCY
DISTRICT 3
ENGINEERING TEAM TWO

DESIGNER
STO

REVIEWER
NRF 07/02/26

PROJECT ID
114950

SHEET P.19 TOTAL 29

PLAN

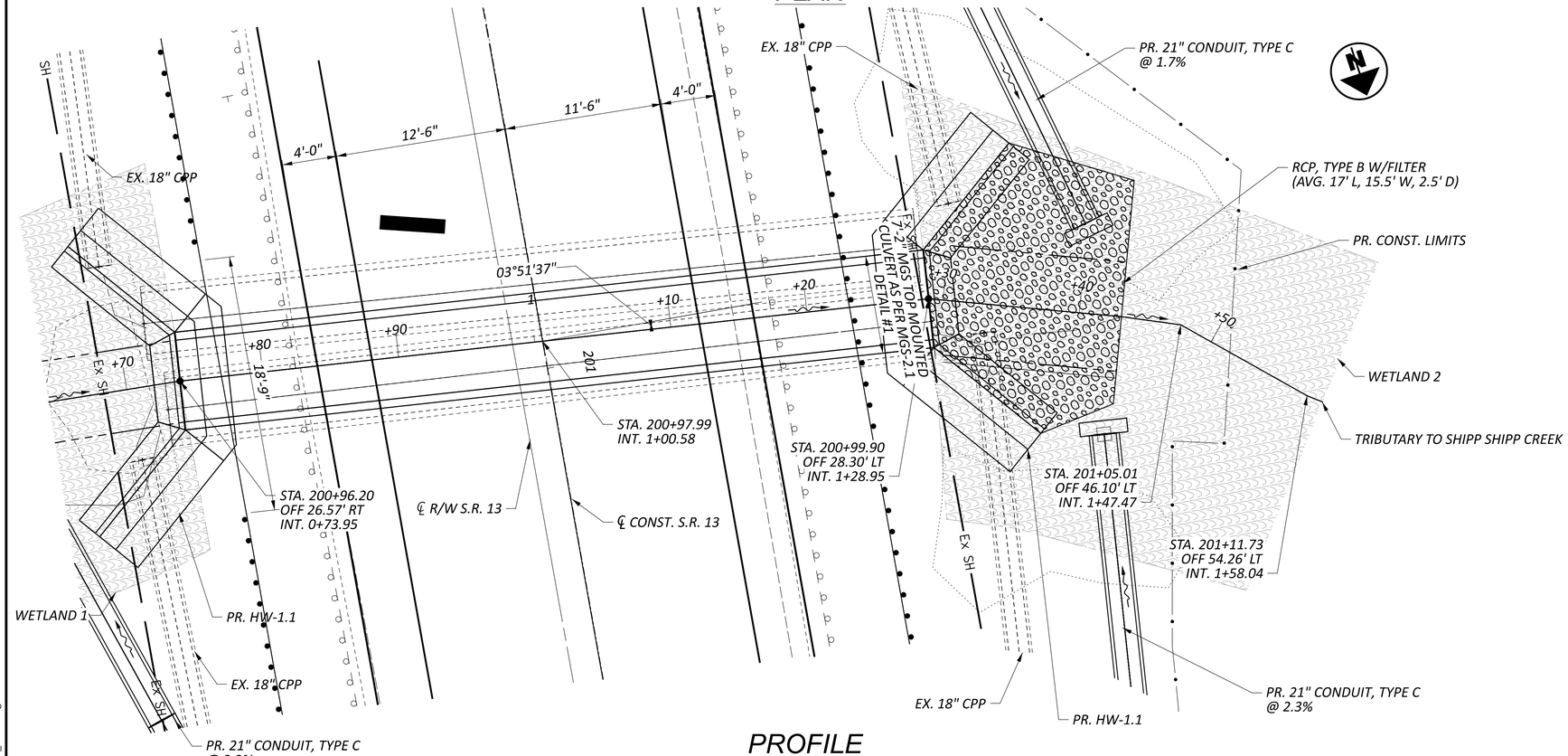

PROFILE

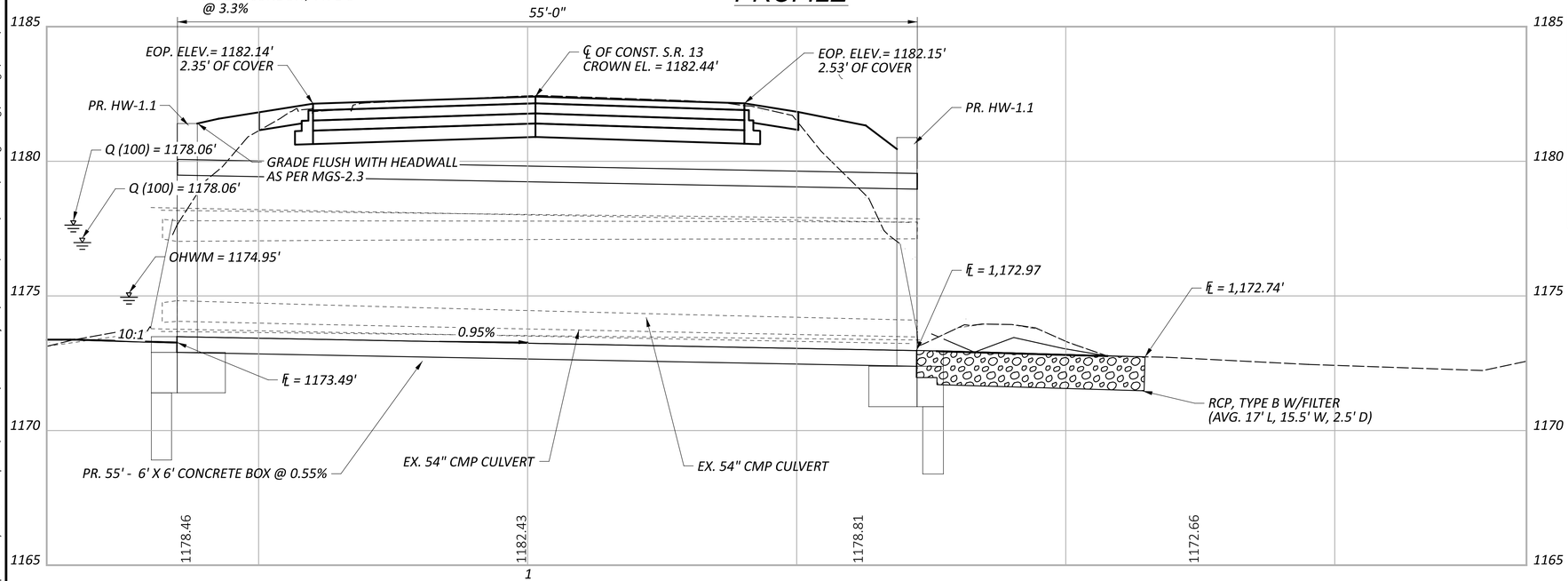

HYDRAULIC DATA

DRAINAGE AREA = 166.4 ACRES
Q (25) = 110 CFS V (25) = 8.87 FT/S
Q (100) = 163 CFS V (100) = 11.28 FT/S
ORDINARY HIGH WATER MARK: 1174.74 FT
DESIGN SERVICE LIFE: 75 YEARS
ABRASION LEVEL: 1
pH: 8.0

EXISTING STRUCTURE

TYPE: TWIN ±56' CMP CULVERT STRUCTURES
SIZE: TWIN 54" DIAMETER
SKEW: 0°
ALIGNMENT: TANGENT
DATE BUILT: 7/1/1984
CONDITION: POOR
SFN: 7000979

PROPOSED STRUCTURE

TYPE: 6' X 6' REINFORCED CONCRETE BOX CULVERT, 706.05

SKEW: 3°51'37" L.F.
ALIGNMENT: TANGENT
CFN: 1997585

LEGEND

- ROCK CHANNEL PROTECTION, TYPE B WITH FILTER
- WETLAND

HORIZONTAL SCALE IN FEET
0 5 10 20

CULVERT DETAILS
RIC-13-28.73

RIC-13-28.73

MODEL: CLP_RIC_30_28.77 - Plan 1 [Sheet] PAPERSIZE: 34x22 (in.) DATE: 8/4/2026 TIME: 4:20:52 PM PLTDRV: OHDOT_PDF.pltcfg PENTBL: 114950_OHDOT_Pen.tbl USER: Spencer.Orr@dot.ohio.gov WORKSPACE: OHDOTCfx02 WORKSET: 114950 PRODUCT: OpenRoadsDesigner 24.00.00.205
pw:\\ohiodot-pw.bentley.com:ohiodot-pw-02\Documents\01 Active Projects\District 03\Richland\114950\400-Engineering\Drainage\Sheets\114950_DC001.dgn

DESIGN AGENCY
DISTRICT 3
ENGINEERING TEAM TWO
DESIGNER STO
REVIEWER NRF 07/02/26
PROJECT ID 119450
SUBSET 1 TOTAL 1
SHEET P.20 TOTAL 29

GENERAL NOTES

DESIGN SPECIFICATIONS

THIS STANDARD DRAWING CONFORMS TO "LRFD BRIDGE DESIGN SPECIFICATION" ADOPTED BY THE AMERICAN ASSOCIATION OF STATE HIGHWAY AND TRANSPORTATION OFFICIALS AND THE BRIDGE DESIGN MANUAL.

DESIGN DATA

THE FOLLOWING DESIGN DATA IS ASSUMED:

INTERNAL ANGLE OF FRICTION OF BACKFILL SOIL, $\phi_{bf} = 30°$
TOTAL UNIT WEIGHT OF BACKFILL SOIL = 120 PCF
INTERNAL ANGLE OF FRICTION (DRAINED), FOUNDATION SOIL, $\phi_f = 28°$
UNDRAINED SHEAR STRENGTH (COHESIVE), FOUNDATION SOIL, S_{uf} = 1500 PSF
UNIT WEIGHT OF CONCRETE = 150 PCF
SLOPE OF BACKFILL = 2:1 (TYPE A & B HEADWALLS)
HEIGHT OF LIVE LOAD SURCHARGE = 2 FT (TYPE C HEADWALLS)

CONCRETE - COMPRESSIVE STRENGTH 4000 PSI
(FOOTING, WINGWALL AND FORESLOPE WALL)

REINFORCING STEEL - ASTM A615, A616, OR A617
GRADE 60 MINIMUM YIELD STRENGTH
60,000 PSI (ALL REINFORCING SHALL BE EPOXY COATED)

BASED ON THE ASSUMED DESIGN DATA, THE WINGWALLS ACHIEVE FACTORED BEARING RESISTANCES THAT ARE GREATER THAN THEIR RESPECTIVE BEARING PRESSURES. IF A BACKFILL MATERIAL WITH A HIGHER INTERNAL ANGLE OF FRICTION OR A LIGHTER TOTAL UNIT WEIGHT IS USED; OR IF A FOUNDATION SOIL WITH A HIGHER DRAINED INTERNAL ANGLE OF FRICTION OR A HIGHER UNDRAINED SHEAR STRENGTH IS ENCOUNTERED; THEN THE STABILITY OF THE WINGWALLS IS SATISFACTORY.

POROUS BACKFILL WITH FILTER FABRIC

POROUS BACKFILL WITH FILTER FABRIC 1'-6" THICK SHALL BE PLACED BEHIND THE WING-WALLS ONLY AND SHALL EXTEND TO 12" BELOW THE EMBANKMENT SURFACE. GEOTEXTILE FABRIC SHALL BE PLACED BETWEEN THE POROUS BACKFILL AND REPLACED EXCAVATION ADJACENT TO THE STRUCTURE. IT SHALL TURN UNDER THE BOTTOM OF THE POROUS BACKFILL AND RETURN 6" ABOVE THE TOP ELEVATION OF THE WEEPHOLE.

WEEPHOLES SHALL BE PLACED 6" TO 12" ABOVE THE NORMAL WATER ELEVATION OR GROUND LINE AND SHALL HAVE A MAXIMUM SPACING OF 10'-0". A MINIMUM OF ONE WEEPHOLE SHALL BE PROVIDED PER WINGWALL.

PREFORMED EXPANSION JOINT FILLER

PREFORMED EXPANSION JOINT FILLER (PEJF) CONFORMING TO CMS 705.03, 1 INCH THICK, SHALL BE PLACED ABOVE THE FOOTING BETWEEN THE SIDES OF THE BOX CULVERT AND THE ENDS OF THE WINGWALLS. PAYMENT FOR MATERIALS AND INSTALLATION SHALL BE INCLUDED WITH ITEM 516 - 1" PREFORMED EXPANSION JOINT FILLER.

SEALING OF FORESLOPE WALL AND WINGWALLS

ALL EXPOSED FORESLOPE WALL AND WINGWALL CONCRETE SHALL BE SEALED WITH EPOXY-URETHANE SEALER. THE LIMITS SHALL BE AS SHOWN IN THE DIAGRAMS BELOW. PAYMENT FOR THE EPOXY-URETHANE SEALER SHALL BE PER ITEM 512 - SEALING OF CONCRETE SURFACES.

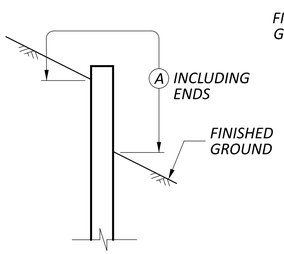

WINGWALL

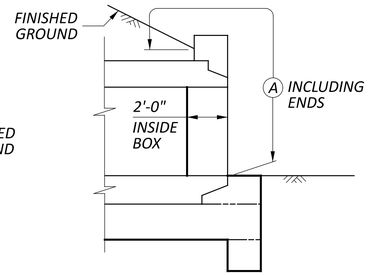

FORESLOPE WALL AND PRECAST BOX (CULVERT OUTLET BEVEL SHOWN)

(A) - SEAL ENTIRE CONCRETE SURFACE AREA

LIMITS OF ITEM 512-SEALING CONCRETE SURFACES DETAILS

WATERPROOFING

TYPE 2 WATERPROOFING, PER CMS 512.08 AND 711.25, SHALL EXTEND VERTICALLY DOWN THE ENTIRE SIDES OF THE PRECAST CULVERT SECTIONS FOR ALL PORTIONS OF THE CULVERT WHICH SHALL BE IN CONTACT WITH THE BACKFILL. PAYMENT FOR THE MEMBRANE WATER-PROOFING SHALL BE AT THE CONTRACT PRICE BID PER SQUARE YARD FOR ITEM 512 - TYPE 2 WATERPROOFING.

IF PAVEMENT IS NOT PLACED DIRECTLY ON TOP OF THE CULVERT, TYPE 2 WATERPROOFING, PER CMS 512.08 AND 711.25 SHALL BE APPLIED TO THE ENTIRE TOP SURFACE OF THE PRE-CAST CULVERT SECTIONS AND SHALL EXTEND ONE FOOT VERTICALLY DOWN THE SIDES FOR ALL PORTIONS OF THE CULVERT WHICH SHALL BE IN CONTACT WITH THE BACKFILL. PAYMENT FOR THE MEMBRANE WATERPROOFING SHALL BE AT THE CONTRACT PRICE BID PER SQUARE YARD FOR ITEM 512 - TYPE 2 WATERPROOFING.

IF PAVEMENT IS TO BE USED DIRECTLY ON TOP OF THE CULVERT, TYPE 3 WATERPROOFING, PER CMS 512.08 AND 711.29 SHALL BE APPLIED TO THE ENTIRE TOP SURFACE OF THE PRECAST CULVERT SECTIONS AND SHALL EXTEND ONE FOOT VERTICALLY DOWN THE SIDES FOR ALL PORTIONS OF THE CULVERT WHICH SHALL BE IN CONTACT WITH THE BACKFILL. PAYMENT FOR THE MEMBRANE WATERPROOFING SHALL BE AT THE CONTRACT PRICE BID PER SQUARE YARD FOR ITEM 512 - TYPE 3 WATERPROOFING.

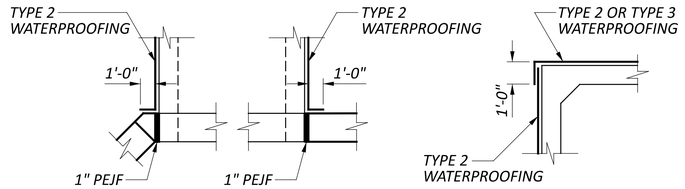

PLAN VIEW **SECTION VIEW**

WATERPROOFING DETAILS

BASIS OF PAYMENT

ALL LABOR, EQUIPMENT AND INCIDENTALS REQUIRED TO CONSTRUCT THE FOOTING, CUTOFF WALL, WINGWALLS AND FORESLOPE WALL SHALL BE INCLUDED WITH ITEM 511 - CLASS QC1 CONCRETE, RETAINING WALL/WINGWALL NOT INCLUDING FOOTING ITEM 511 - CLASS QC1 CONCRETE, FOOTING, AND ITEM 511 - CLASS QC1 CONCRETE HEADWALL. PAYMENT FOR REINFORCING STEEL SHALL BE INCLUDED WITH ITEM 509 - EPOXY COATED REINFORCMENT.

HEADWALL DETAILS

RIC-13-28.73

MODEL: Sheet PAPERSIZE: 34x22 (in.) DATE: 8/4/2026 TIME: 4:20:58 PM PLTDRV: OHDOT_PDF.pltcfg PENTBL: 114950_OHDOT_Pen.tbl USER: Spencer.Orr@dot.ohio.gov WORKSPACE: OHDOTCEv02 WORKSET: 114950 PRODUCT: OpenRoadsDesigner 24.00.00.205
pw:\\ohiodot-pw.bentley.com:ohiodot-pw-02\Documents\01 Active Projects\District 03\Richland\114950\400-Engineering\Drainage\Sheets\114950_DC002.dgn

DESIGN AGENCY
DISTRICT 3
ENGINEERING TEAM TWO
DESIGNER STO
REVIEWER NRF 07/02/26
PROJECT ID 114950
SHEET P.21 TOTAL 29

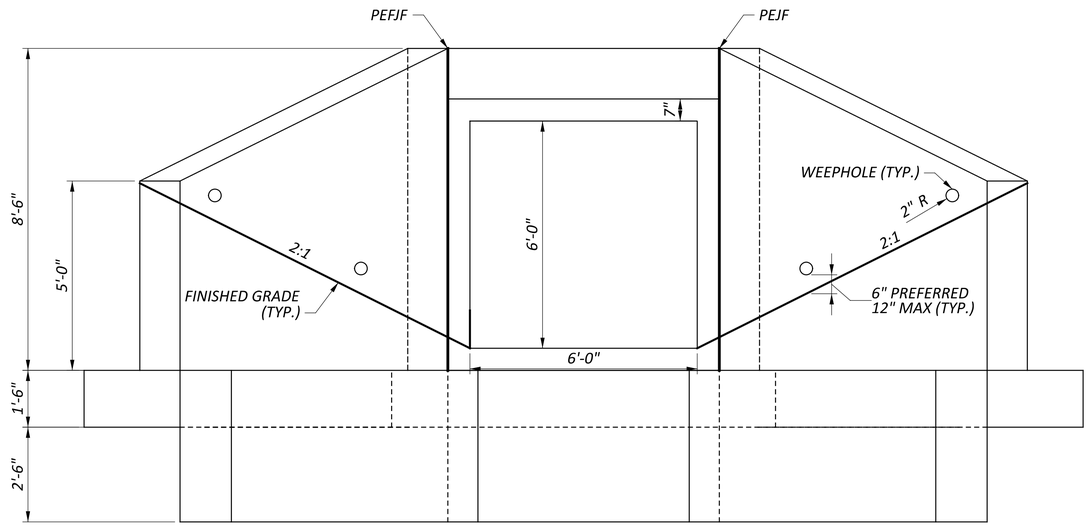

INLET ELEV. 1181.40
OUTLET ELEV. 1180.88

INLET ELEV. 1177.90
OUTLET ELEV. 1177.38

INLET ELEV. 1172.90
OUTLET ELEV. 1172.38

INLET ELEV. 1171.40
OUTLET ELEV. 1170.88

INLET ELEV. 1168.90
OUTLET ELEV. 1168.38

INLET/ELEVATION VIEW

INVERT ELEV.
INLET: 1173.49'
OUTLET: 1172.97'

4

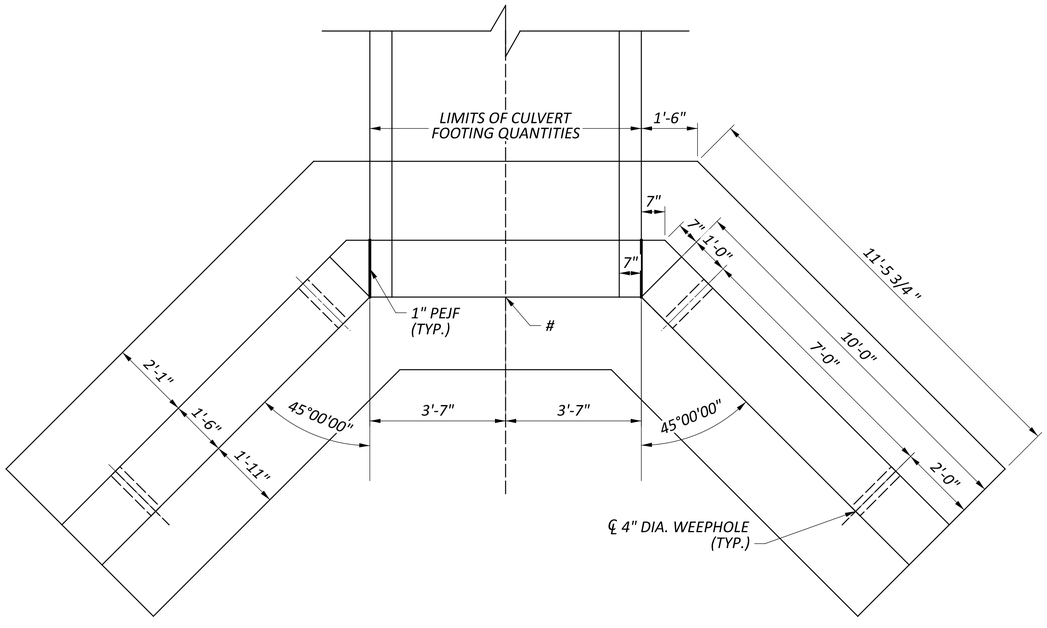

INLET/OUTLET PLAN VIEW

STATION/OFFSET
INLET: STA. 200+96.20 OFF. 26.57' RT
OUTLET: 200+99.90 OFF. 28.30' LT

TYPE B HEADWALL REINFORCING SCHEDULE

BAR MARK	NUMBER	LENGTH	WEIGHT (LBS.)	TYPE	BAR TYPE DIMENSIONS A	B	C	D	INC.
				WINGWALLS					
	4	4'- 9"							
X501	SERIES	TO	437	STR					0'- 3"
	16	8'- 4"							
X502	6	8'- 2"	52	STR					
Y501	32	4'- 9"	158	TYPE 1	0'- 11"	3'- 11"			
WW501	16	10'- 3"	172	STR					
	8	2'- 0"							
WW502	SERIES	TO	0	STR					0'- 52"
	2	6'- 4"							
WW503	2	2'- 3"	5	TYPE 19	1'- 10"	0'- 3"	0'- 4"		
WW504	5	3'- 4"	18	TYPE 19	2'- 11"	0'- 3"	0'- 4"		
WW505	4	10'- 6"	44	STR					
WW506	2	0'- 9"	2	STR					
	SUBTOTAL		888						
				FOOTING & CUTOFF WALL					
V501	27	5'- 2"	146	STR					
W501	27	5'- 2"	146	STR					
Z501	16	8'- 0"	134	TYPE 2	3'- 7"	1'- 1"	3'- 7"		
	2	14'- 0"							
F601	SERIES	TO	94	STR					0'- 11"
	3	15'- 10"							
	4	10'- 0"							
F602	SERIES	TO	432	STR					0'- 7"
	3	11'- 2"							
	2	11'- 8"							
F603	SERIES	TO	51	STR					0'- 9"
	2	12'- 5"							
	4	9'- 1"							
F604	SERIES	TO	58	STR					0'- 5"
	2	9'- 6"							
	4	9'- 1"							
F605	SERIES	TO	58	STR					0'- 5"
	2	9'- 6"							
	2	11'- 8"							
F606	SERIES	TO	51	STR					0'- 9"
	2	12'- 5"							
F507	4	7'- 7"	32	STR					
F508	2	4'- 2"	9	STR					
F509	7	5'- 8"	42	TYPE 1	1'- 7"	4'- 2"			
	1	7'- 2"							
F510	SERIES	TO	7	STR					0'- 28"
	2	9'- 6"							
	SUBTOTAL		1260						
				FORESLOPE WALL					
FS501	8	3'- 5"	29	TYPE 2	1'- 0"	1'- 1"	1'- 6"		
FS502	8	2'- 8"	23	TYPE 2	0'- 11"	1'- 0"	0'- 11"		
FS503	4	6'- 9"	41	STR					
	SUBTOTAL		93						
	GRAND TOTAL		2241						
	GRAND TOTAL INLET+OUTLET		4482						

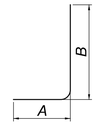

TYPE-1

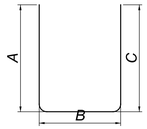

TYPE-2

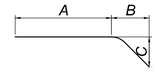

TYPE-19

HEADWALL DETAILS

RIC-13-28.73

MODEL: Sheet 2 PAPERSIZE: 34x22 (in.) DATE: 8/4/2026 TIME: 4:21:00 PM PLTDRV: OHDOT_PDF.pltcfg PENTBL: 114950_OHDOT_Pen.tbl USER: Spencer.Orr@dot.ohio.gov
pw:\\ohiodot-pw.bentley.com:ohiodot-pw-02\Documents\01 Active Projects\District 03\Richland\114950\400-Engineering\Drainage\Sheets\114950_DC002.dgn

DESIGN AGENCY
DISTRICT 3
ENGINEERING TEAM TWO
DESIGNER
STO
REVIEWER
NRF 07/02/26
PROJECT ID
114950
SHEET P.22 TOTAL 29

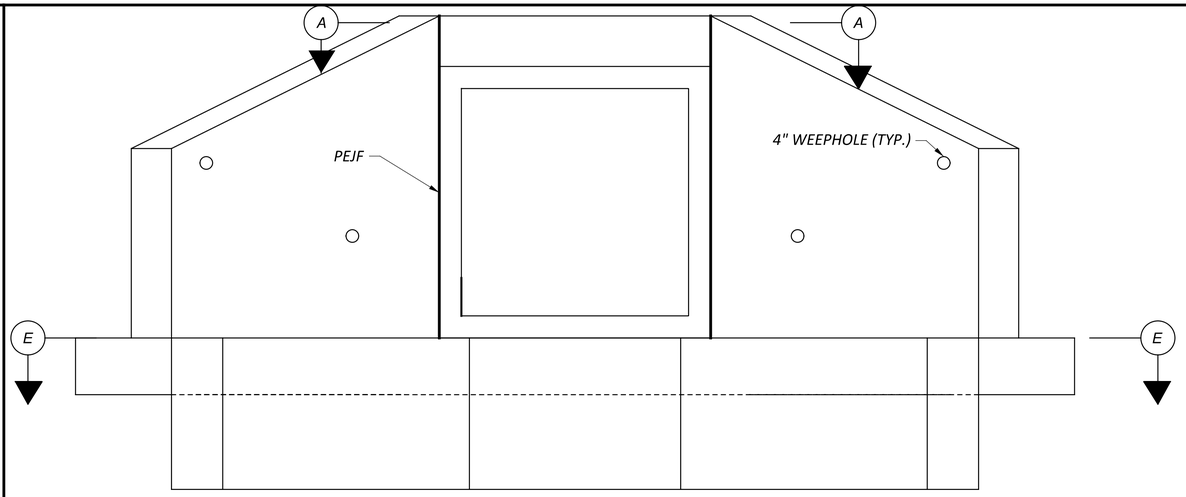

ELEVATION

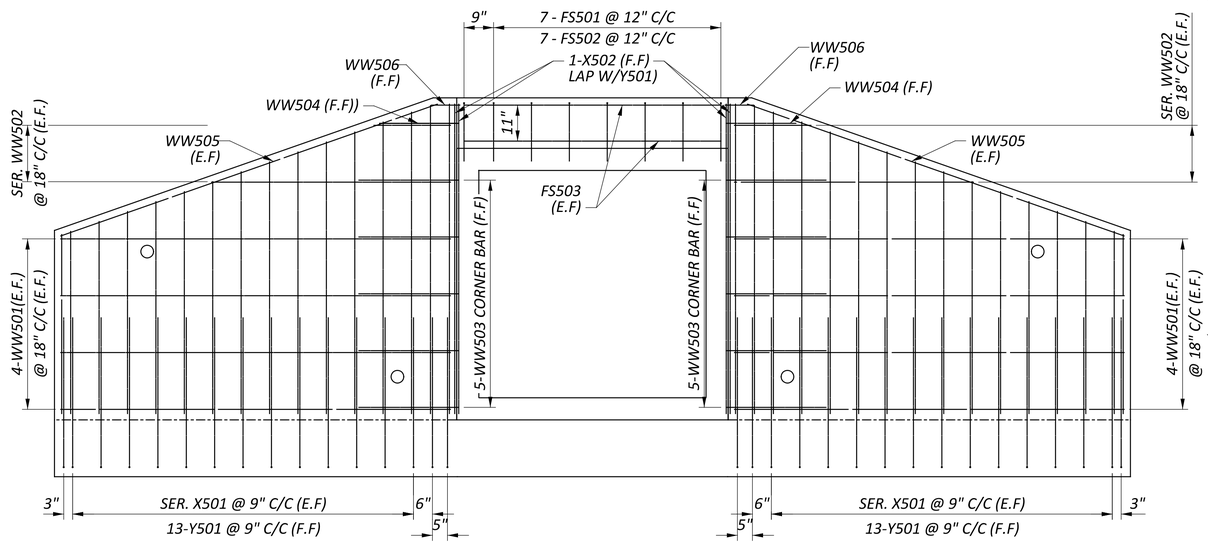

SECTION D-D

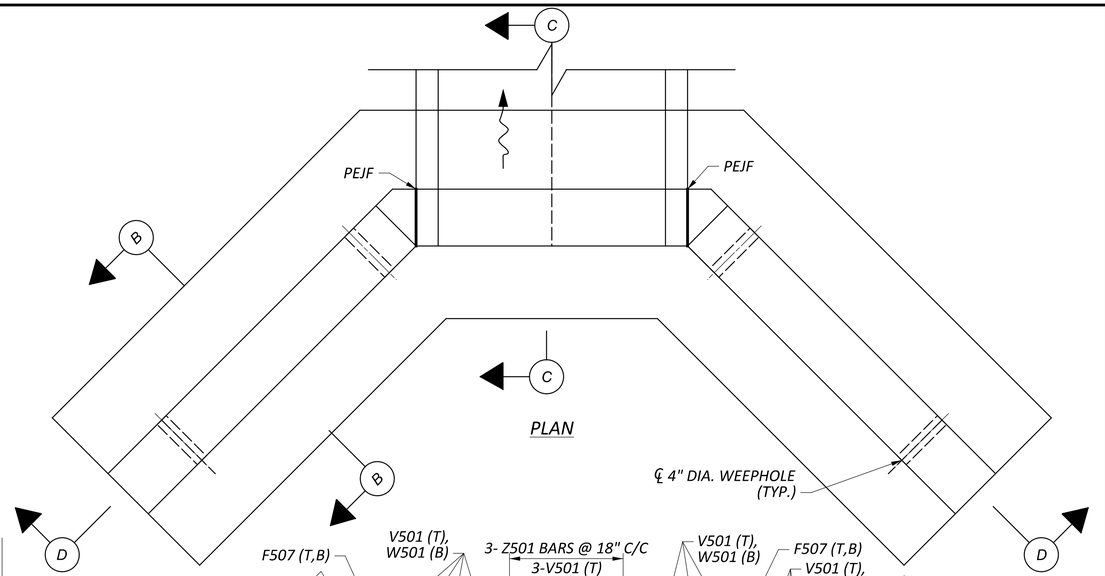

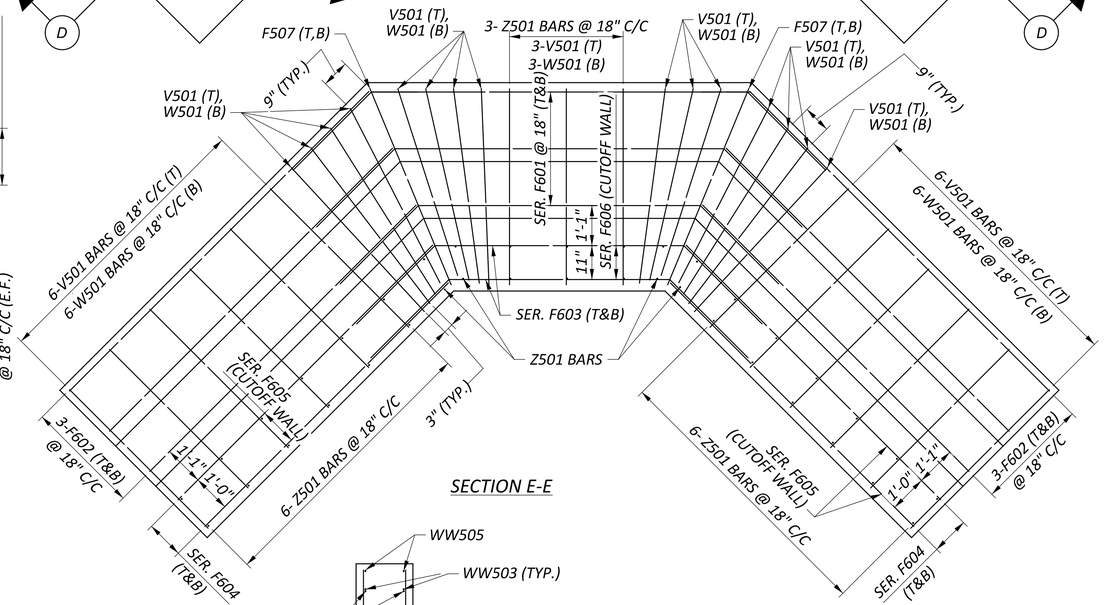

SECTION E-E

KEY:

B	BOTTOM	M	MIDDLE
C/C	CENTER TO CENTER	N.F.	NEAR FACE
C.J.	CONSTRUCTION JOINT	PEJF	PREFORMED EXPANSION JOINT FILLER
℄	CENTERLINE		
DIA.	DIAMETER	STR	STRAIGHT
E.F.	EACH FACE	T	TOP
F.F.	FAR FACE	TYP.	TYPICAL

NOTES:

1.) ALL DIMENSIONS ARE OUTER-TO-OUTER.

2.) ALL REINFORCING STEEL IS TO BE EPOXY COATED.

3.) 2" COVER EXCEPT FOR THE LOCATIONS SHOWN IN SECTIONS B-B & C-C.

4.) ANCHORING METHODS FOR FS501: PROVIDE A 1 INCH DIAMETER DRILLED HOLE AT EVERY LOCATION THAT THE FS501 BARS ARE TO ANCHOR TO THE CONCRETE BOX. INSERT AND EPOXY THE BARS INTO THE HOLES USING AN APPROVED EPOXY MATERIAL. ALTERNATIVELY, CAST MECHANICAL CONNECTORS IN THE PRECAST BOX AND CONNECT THE FS501 BARS USING THESE MECHANICAL CONNECTIONS.

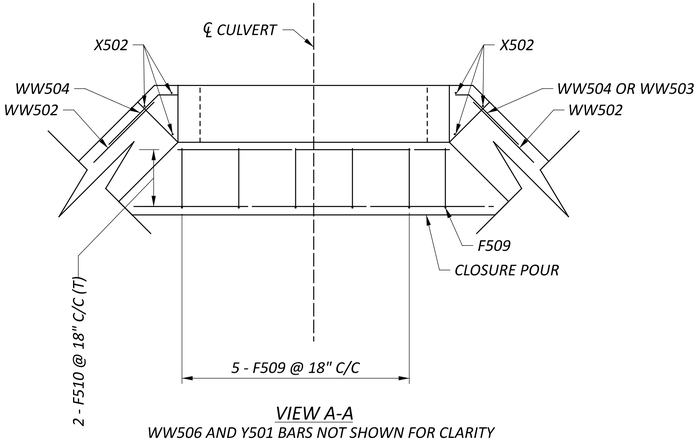

VIEW A-A

WW506 AND Y501 BARS NOT SHOWN FOR CLARITY

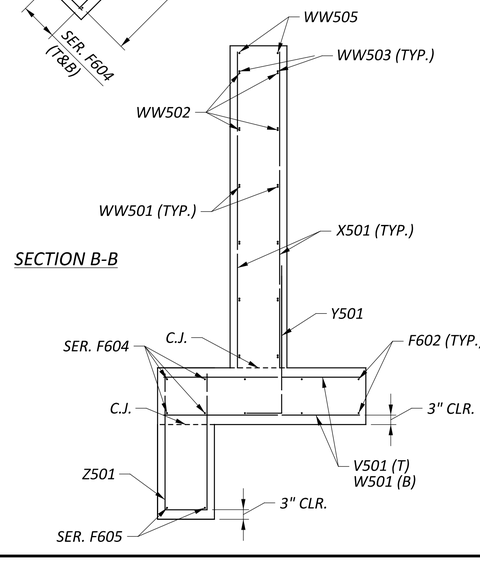

SECTION B-B

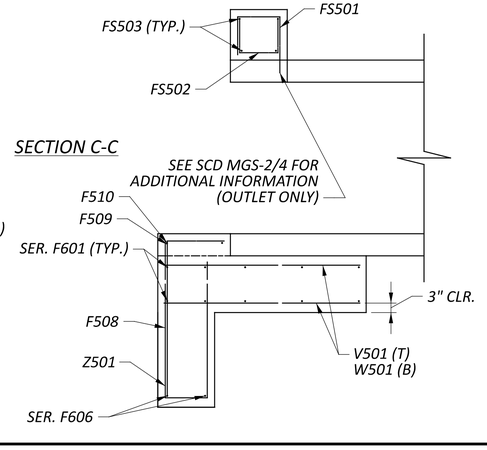

SECTION C-C

HEADWALL DETAILS

RIC-13-28.73

DESIGN AGENCY	DISTRICT 3
	ENGINEERING TEAM TWO
DESIGNER	STO
REVIEWER	NRF 07/02/26
PROJECT ID	114950
SHEET	P.23
TOTAL	29

MODEL: REBAR DETAILS PAPERSIZE: 34x22 (in.) DATE: 8/4/2026 TIME: 4:21:00 PM PLTDRV: OHDOT_PDF.pltcfg PENTBL: 114950_OHDOT_Pen.tbl USER: Spencer.Orr@dot.ohio.gov WORKSPACE: OHDOTCIEv02 WORKSET: 114950 PRODUCT: OpenRoadsDesigner 24.00.00.205
pw:\\ohiodot-pw.bentley.com:ohiodot-pw-02\Documents\01 Active Projects\District 03\Richland\114950\400-Engineering\Drainage\Sheets\114950_DC002.dgn

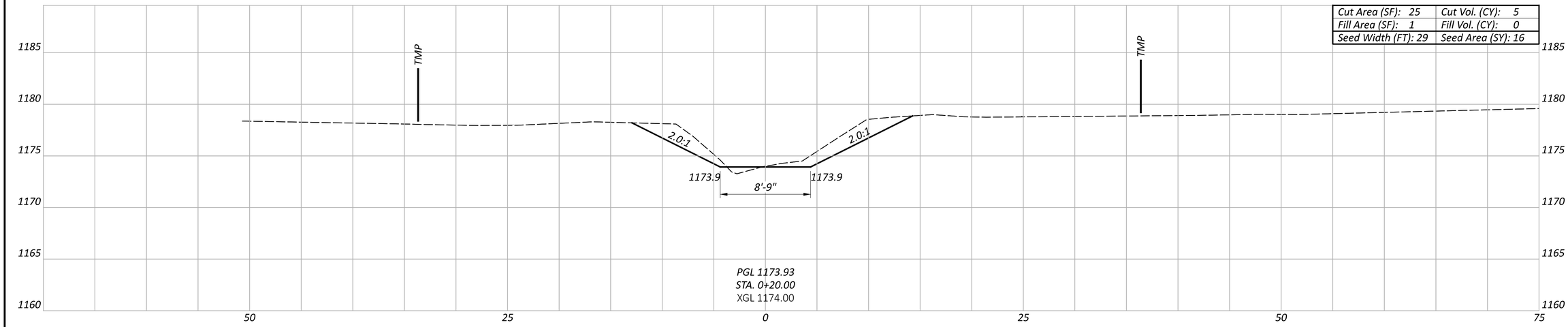

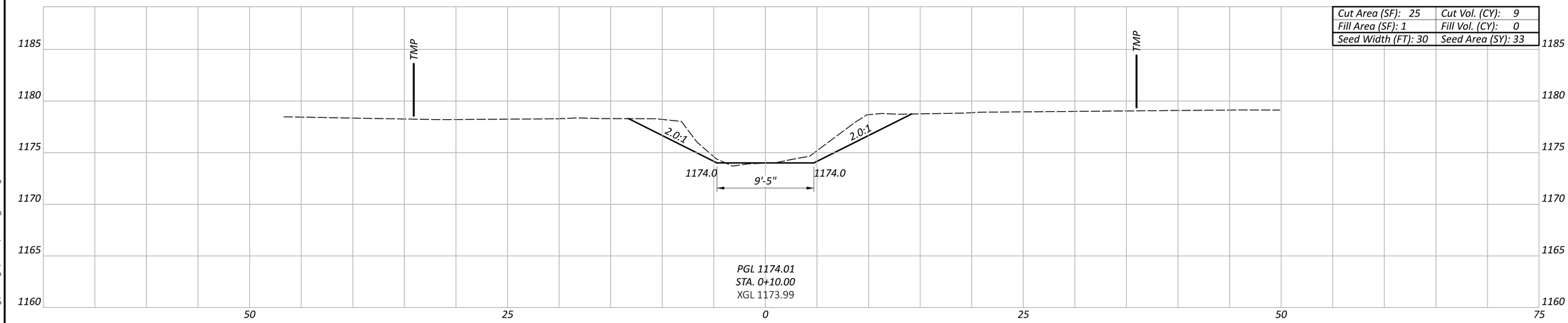

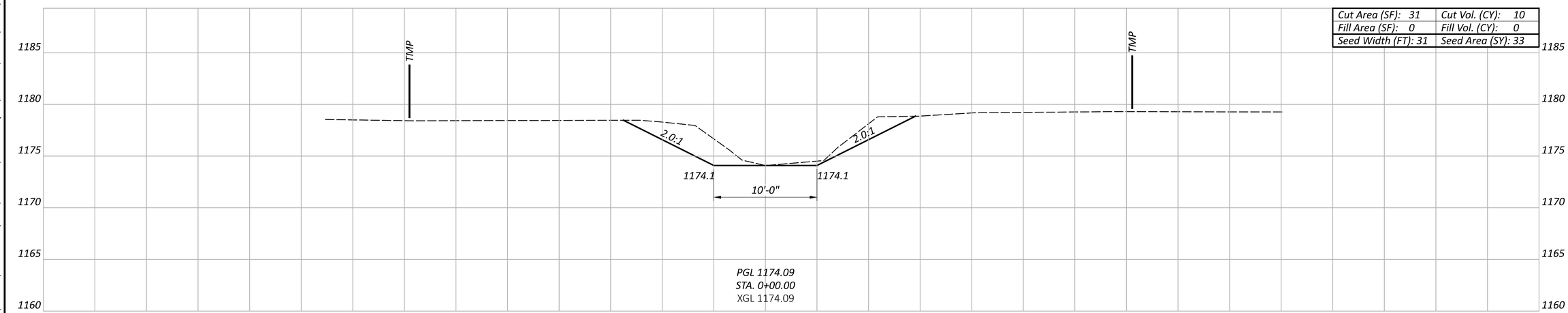

CHANNEL CROSS SECTIONS
STA. 0+00.00 TO STA. 0+20.00

Sheet Totals		
Seeding	Cut	Fill
82	24	0

DESIGN AGENCY
DISTRICT 3
ENGINEERING TEAM TWO

DESIGNER
STO

REVIEWER
NRF 07/02/26

PROJECT ID
119450

SHEET P.24 TOTAL 29

RIC-13-28.73

MODEL: CLP_RIC_30_28.77 - 0+00.00 [Sheet] PAPERSIZE: 34x22 (in.) DATE: 8/4/2026 TIME: 4:21:07 PM PLTDRV: OHDOT_PDF.pltcfg PENTBL: 114950_OHDOT_Pen.tbl USER: Spencer.Orr@dot.ohio.gov WORKSPACE: OHDOTCEv02 WORKSET: 114950 PRODUCT: OpenRoadsDesigner 24.00.00.205
pw:\\ohiodot-pw.bentley.com:ohiodot-pw-02\Documents\01 Active Projects\District 03\Richland\114950\400-Engineering\Drainage\Sheets\114950_XD001.dgn

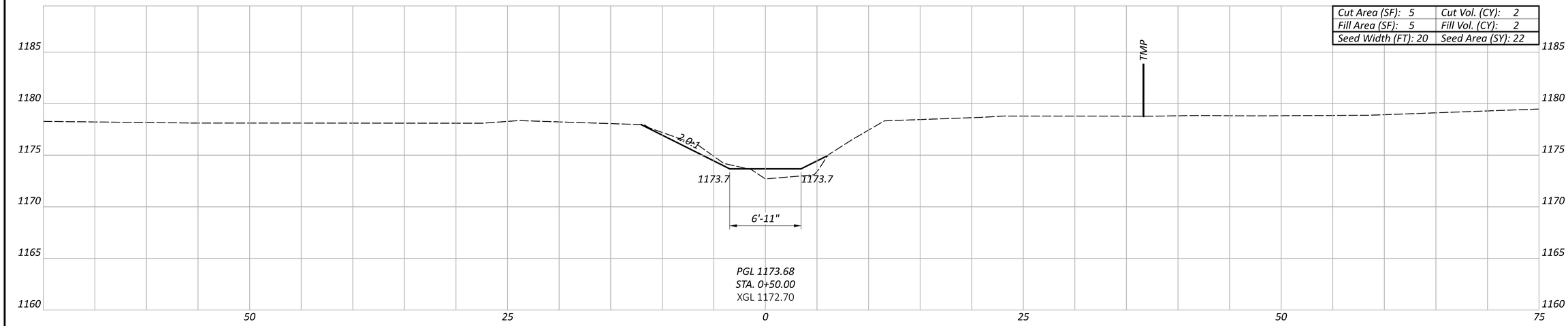

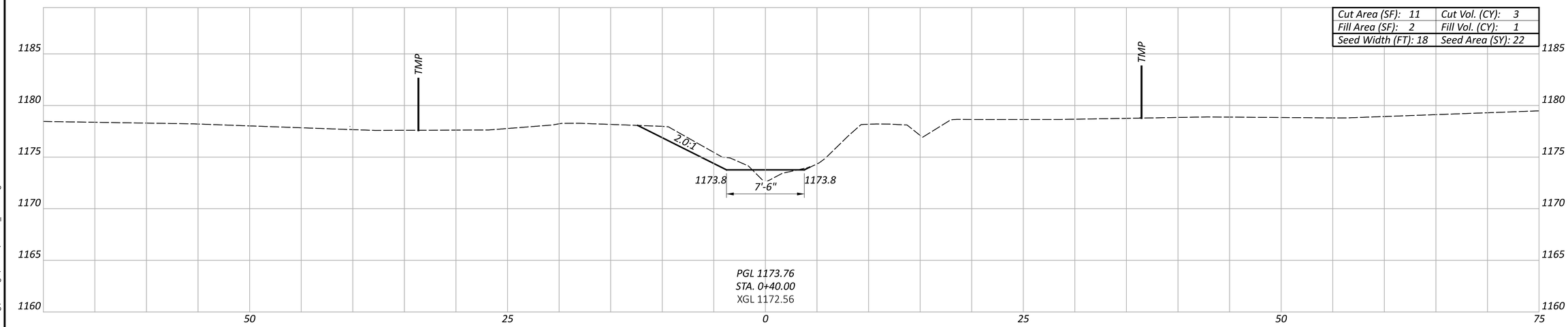

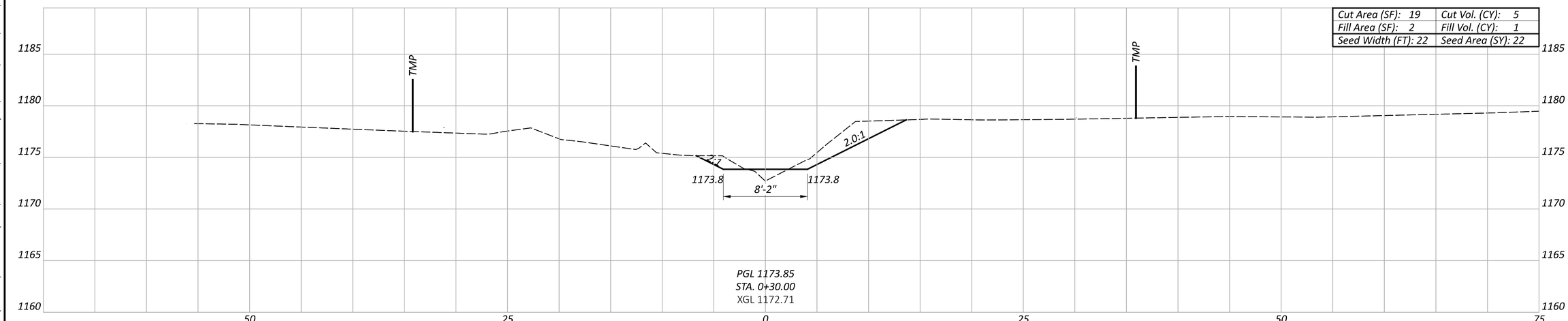

CHANNEL CROSS SECTIONS
STA. 0+30.00 TO 0+50.00

RIC-13-28.73

Sheet Totals		
Seeding	Cut	Fill
65	10	4

DESIGN AGENCY
DISTRICT 3
ENGINEERING TEAM TWO

DESIGNER
STO

REVIEWER
NRF 07/02/26

PROJECT ID
114950

SHEET P.25 TOTAL 29

MODEL: CLP_RIC_30_28.77 - 0+30.00 [Sheet] PAPERSIZE: 34x22 (in.) DATE: 8/4/2026 TIME: 4:21:09 PM PLTDRV: OHDOT_PDF.pltcfg PENTBL: 114950_OHDOT_Pen.tbl USER: Spencer.Orr@dot.ohio.gov WORKSPACE: OHDOTCEv02 WORKSET: 114950 PRODUCT: OpenRoadsDesigner 24.00.00.205
pw:\\ohiodot-pw.bentley.com:ohiodot-pw-02\Documents\01 Active Projects\District 03\Richland\114950\d00-Engineering\Drainage\Sheets\114950_XD001.dgn

MODEL: CLP_RIC_30_28.77 - 0+60.00 [Sheet] PAPERSIZE: 34x22 (in.) DATE: 8/4/2026 TIME: 4:21:10 PM PLTDRV: OHDOT_PDF.pltcfg PENTBL: 114950_OHDOT_Pen.tbl USER: Spencer.Orr@dot.ohio.gov WORKSPACE: OHDOTCEv02 WORKSET: 114950 PRODUCT: OpenRoadsDesigner 24.00.00.205
pw:\\ohiodot-pw.bentley.com:ohiodot-pw-02\Documents\01 Active Projects\District 03\Richland\114950\400-Engineering\Drainage\Sheets\114950_XD001.dgn

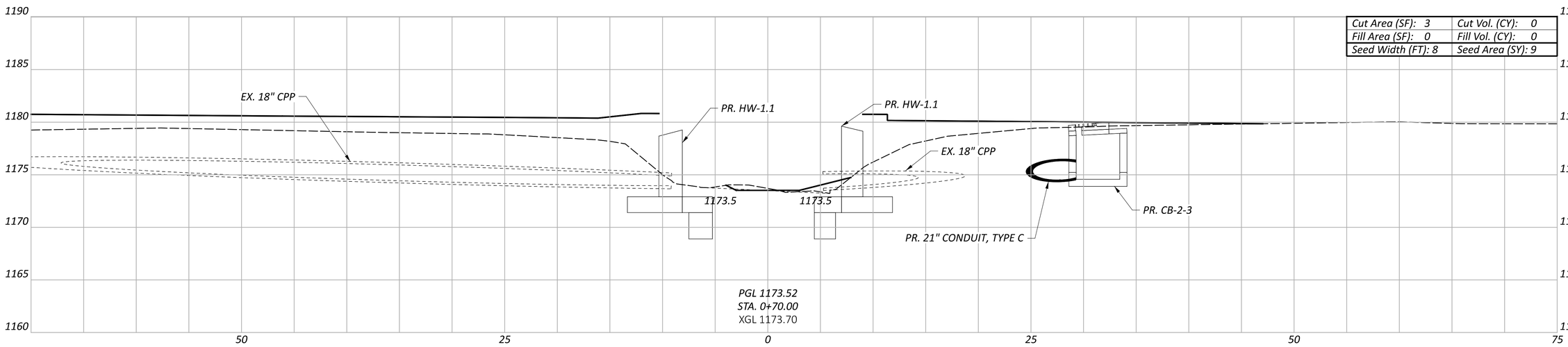

Cut Area (SF): 3	Cut Vol. (CY): 0
Fill Area (SF): 0	Fill Vol. (CY): 0
Seed Width (FT): 8	Seed Area (SY): 9

PGL 1173.52
STA. 0+70.00
XGL 1173.70

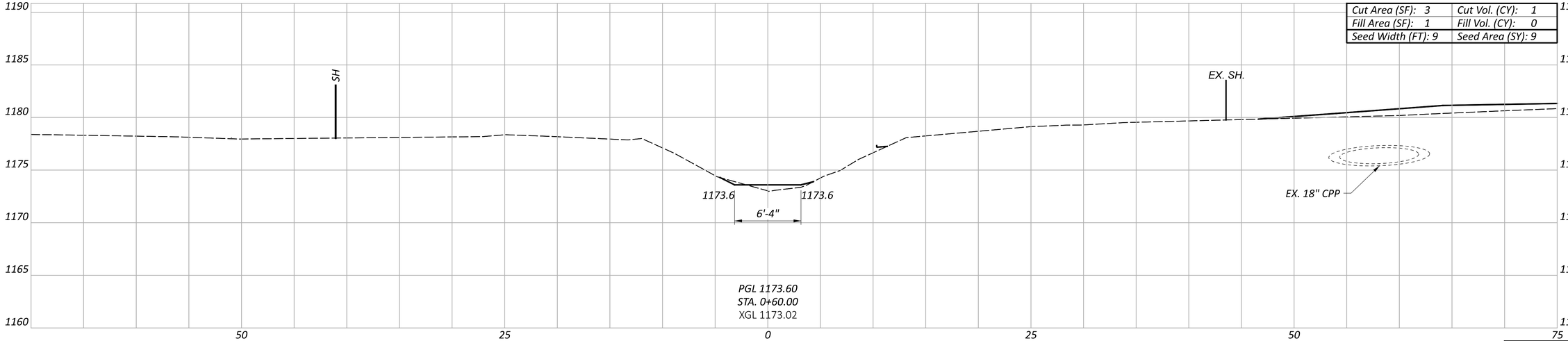

Cut Area (SF): 3	Cut Vol. (CY): 1
Fill Area (SF): 1	Fill Vol. (CY): 0
Seed Width (FT): 9	Seed Area (SY): 9

PGL 1173.60
STA. 0+60.00
XGL 1173.02

CHANNEL CROSS SECTIONS
STA. 0+60.00 TO 0+70.00

RIC-13-28.73

Sheet Totals		
Seeding	Cut	Fill
18	2	0

DESIGN AGENCY
DISTRICT 3
ENGINEERING TEAM TWO

DESIGNER
STO

REVIEWER
NRF 07/02/26

PROJECT ID
119450

SHEET P.26 | TOTAL 29

RIC-13-28.73

MODEL: CLP_RIC_30_28.77 - 0+73.95 [Sheet] PAPERSIZE: 34x22 (in.) DATE: 8/4/2026 TIME: 4:21:11 PM PLTDRV: OHDOT_PDF.pltcfg PENTBL: 114950_OHDOT_Pen.tbl USER: Spencer.Orr@dot.ohio.gov WORKSPACE: OHDOTCEv02 WORKSET: 114950 PRODUCT: OpenRoadsDesigner 24.00.00.205
pw:\\ohiodot-pw.bentley.com:ohiodot-pw-02\Documents\01 Active Projects\District 03\Richland\114950\400-Engineering\Drainage\Sheets\114950_XD001.dgn

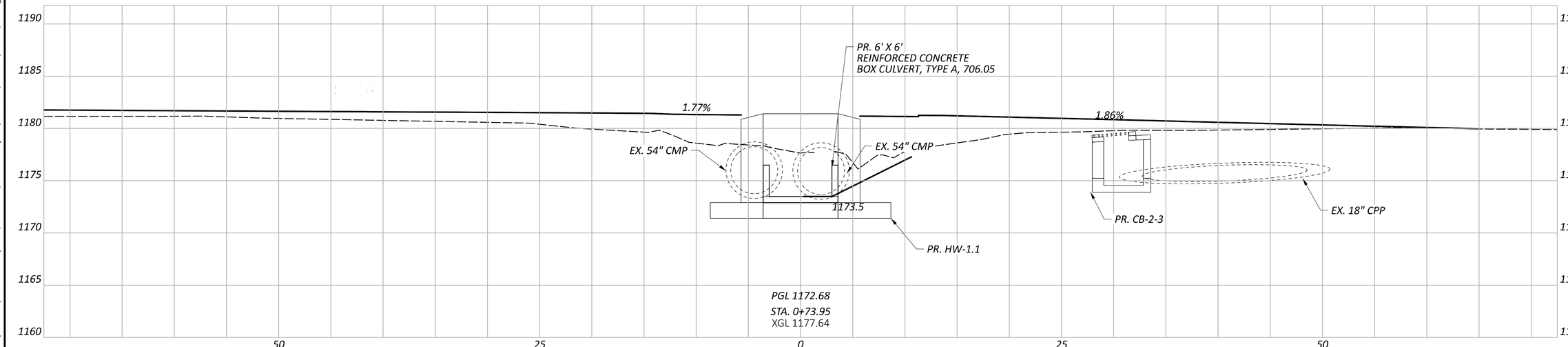

CHANNEL CROSS SECTIONS
STA. 0+73.95 TO 0+90.00

Sheet Totals		
Seeding	Cut	Fill

DESIGN AGENCY
DISTRICT 3
ENGINEERING TEAM TWO

DESIGNER
STO

REVIEWER
NRF 07/02/26

PROJECT ID
114950

SHEET P.27 TOTAL 29

MODEL: CLP_RIC_30_28.77 - 1+28.93 [Sheet] PAPERSIZE: 34x22 (in.) DATE: 8/4/2026 TIME: 4:21:12 PM PLTDRV: OHDOT_PDF.pltcfg PENTBL: 114950_OHDOT_Pen.tbl USER: Spencer.Orr@dot.ohio.gov WORKSPACE: OHDOTCEv02 WORKSET: 114950 PRODUCT: OpenRoadsDesigner 24.00.00.205
pw:\\ohiodot-pw.bentley.com:ohiodot-pw-02\Documents\01 Active Projects\District 03\Richland\114950\400-Engineering\Drainage\Sheets\114950_XD001.dgn

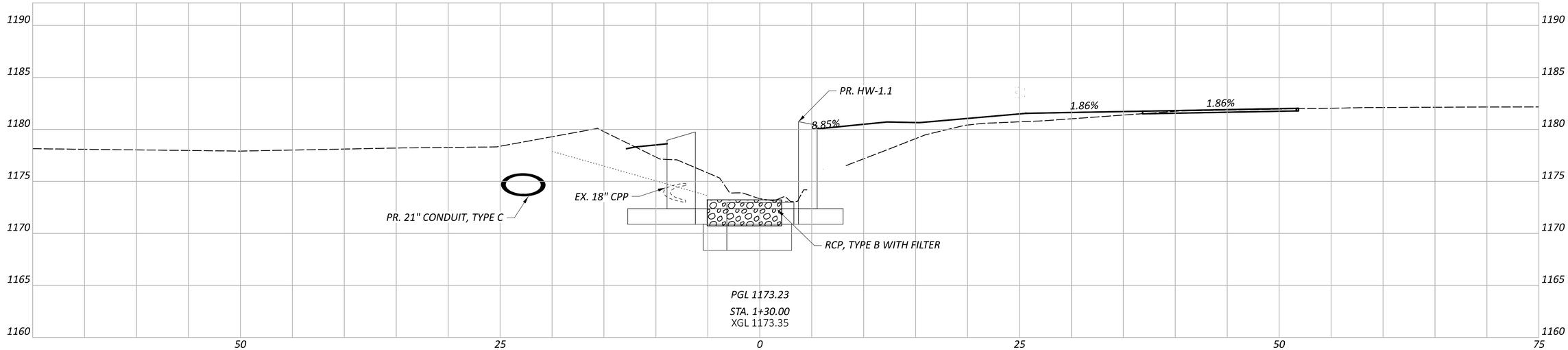

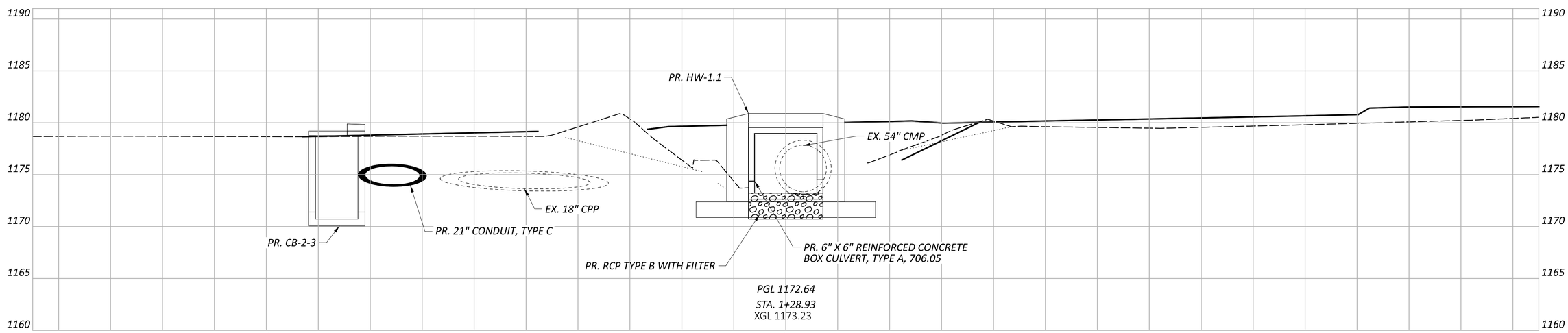

CHANNEL CROSS SECTIONS
STA. 1+28.93 TO 1+30.00

Sheet Totals		
Seeding	Cut	Fill

DESIGN AGENCY
DISTRICT 3
ENGINEERING TEAM TWO

DESIGNER
STO

REVIEWER
NRF 07/02/26

PROJECT ID
114950

SHEET	TOTAL
P.28	29

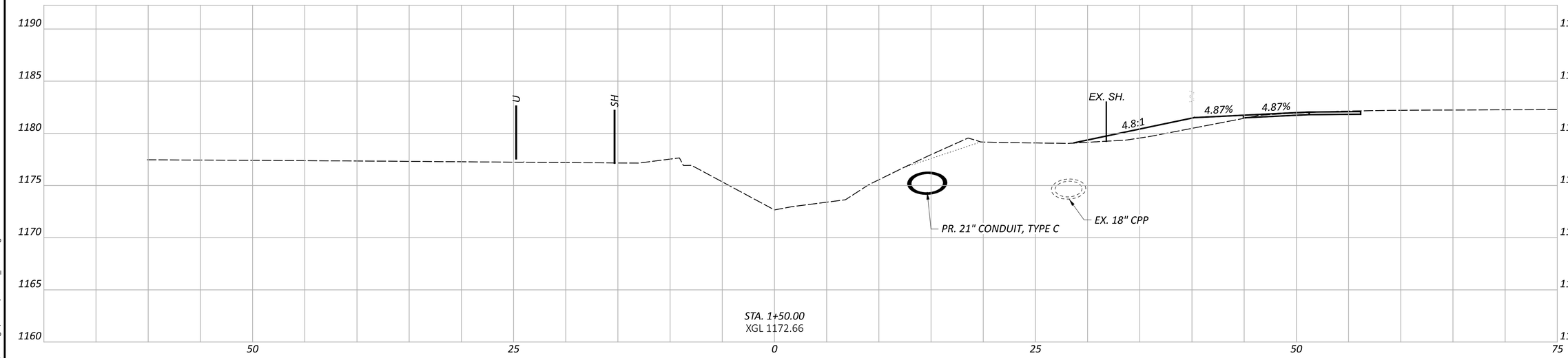

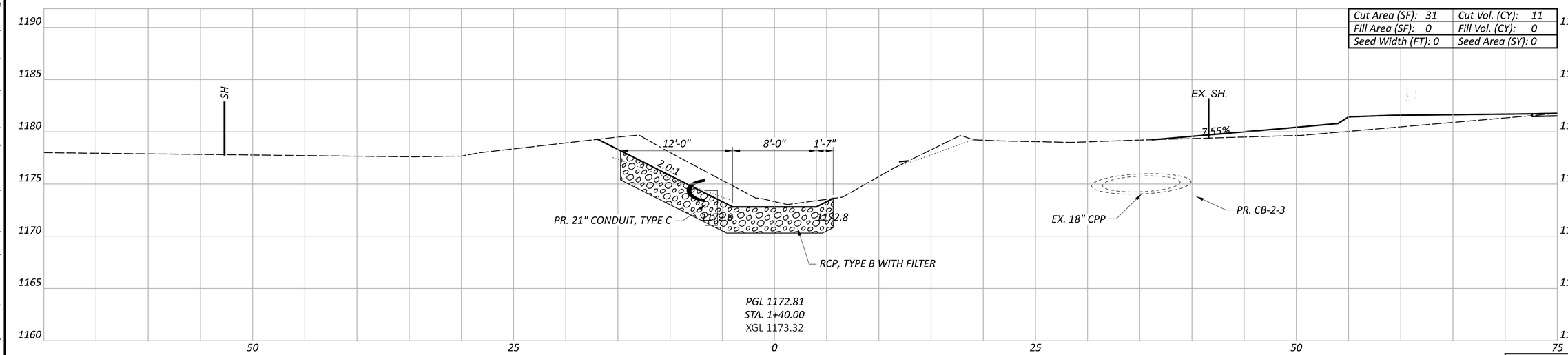

CHANNEL CROSS SECTIONS
STA. 1+40.00 TO 1+50.00

Sheet Totals		
Seeding	Cut	Fill
0	11	0

DESIGN AGENCY
DISTRICT 3
ENGINEERING TEAM TWO

DESIGNER
STO

REVIEWER
NRF 07/02/26

PROJECT ID
114950

SHEET P.29 TOTAL 29

RIC-13-28.73

MODEL: CLP_RIC_30_28.77 - 1+40.00 [Sheet] PAPERSIZE: 34x22 (in.) DATE: 8/4/2026 TIME: 4:21:13 PM PLTDRV: OHDOT_PDF.pltcfg PENTBL: 114950_OHDOT_Pen.tbl USER: Spencer.Orr@dot.ohio.gov WORKSPACE: OHDOTCEv02 WORKSET: 114950 PRODUCT: OpenRoadsDesigner 24.00.00.205
pw:\\ohiodot-pw.bentley.com:ohiodot-pw-02\Documents\01 Active Projects\District 03\Richland\114950\400-Engineering\Drainage\Sheets\114950_XD001.dgn