ADDENDUM NO. 03

Date: November 11, 2026
RVi Project #: 26000793
Project Name: South Park Phase Two

To: Prospective Bidders
FROM: RVi Planning + Landscape Architecture (RVi)

Notice: This addendum forms a part of the contract documents and modifies the original Issue for permit and bid set dated October 28, 2026, as noted below. Bidders shall acknowledge receipt of this addendum in the space provided on the bid form. Failure to do so may subject the bidder to disqualification. This addendum consists of the following changes identified in **bold**:

Clarifications:

- Checking if our vendor for netting and netting poles (Unlimited Sports Solutions) is an acceptable or equal alternative for South Park?
  Response: The City has accepted Unlimited Sports Solutions as an approved equal for South Park's netting. The specifications will be updated accordingly.
- There are no mention of the size for the line posts of the 10'tall Chain Link Fence. Could you please clarify?
  Response: The line posts for the 10' height chain link fence are to be 2-3/8".
- The Bid form Line Items for the Playfield Equipment have percentages listed in the Unit section.
  Response: the Playfield Equipment Units have been updated to Lump Sum values.
- I'm looking for clarification on the PVC. The controller detail says 1-inch PVC, but the spray feature says 3 of them need 1.5-inch PVC.
  Response: Per the manufacturer's representative - *HydroLogix is designed with qty. 6 - 1" lines. A 1" line will always be what feeds features on a HydroLogix design, if on the drawing, a feature calls for a larger line size than 1", the installer would use a PVC reducer coupling to upsize to the fitting on the feature (if it has one). Most of our aboveground features don't use fittings though so the 1" line would be stubbed in the concrete and would feed the feature even though our design tools/drawings might call out a larger line for that feature. Some features may take long to fill on the initial HydroLogix button push but water distributes as normal once the feature is full of water. Some of these finer details are discussed in the included HydroLogix Sales Sheet.*
- There is no Fence Schedule for the 10' high fence (Fence Schedule is Blank)
  Response: The fencing schedule has been populated and updated in the detail.
- Are the gates 4' opening (Detail 4) or 5' opening (Detail 5 on sheet L5.4 elevation detail)?
  Response: the gate openings are to be 4' wide.
- Can you give us the diameter of the dugout posts, as our fence appears it will tie into them?
  Response: the dugout posts are 5" x 5"
- The bid form, Schedule of Unit Prices is not consistent with Specification Section 012200 – Unit Prices.
  Response: This has been revised, see included Section 012200 – Unit Prices.

- What infield mix would you like, and can we use the attached?
  Response: See included Infield Mix Specification Section 321823 Athletic Surfacing
- There are 2 different curb and gutter details showing different depths of gutter. The Lake Forest detail indicates a 9-inch gutter depth which is standard while the depressed curb and gutter detail indicates a 12-inch gutter depth. Please confirm the depth of the gutter.
  Response: The depth of the depressed curb is to be 9 inches. Detail 5/L5.1 has been revised to reflect this.
- I am having trouble figuring out the spacing of the large netting posts while looking at the layout on sheet 5.7. Can you verify?
  Response: Updated net post spacing has been included on sheet L3.1
- I saw the South Park Phase Two bid and wanted to introduce Backyard Kingdom as a potential source for the shelter, site furnishings and safety surfacing portions.
  Response: The shelter, site furnishings are to be purchased by the Owner. Safety surfacing is to be provided by Contractor. To be considered an approved equal, the Contractor will need to supply necessary documentation how the product compares to the project specifications for Owner approval prior to bid opening.
- Is the Owner providing the bases, home plate, and pitchers plate? If not, who is the manufacturer of these items? There is no specification provided.
  Response: The bases, home plate, and pitcher's plate are to be provided and installed by Contractor.
- Interpretive Signs are noted on the plans, however there is no manufacturer nor line item to include pricing for this item. Is this an Owner provided and installed item or is this to be included in our scope of work.
  Response: The interpretive signs are to be provided and installed by Owner.

Specification Revisions:

- **Revise** 000010 Table of Contents
- **Revise** 000410 Bid Form to include Alternate #1
- **Revise** 000415A Schedule of Values to update the following:
  - Playfield equipment Units updated to Lump Sum units
  - Revise ADA signage to be in section 321216 Asphalt Paving
  - Revise Units of line items in section 265600 Facility Water Distribution Piping
  - Include depressed curb line item in section 321313 Concrete Paving and Curbs
  - Include AquaFlex Porous Surfacing in section 321816 Playground Protective Surfacing
  - Include Native Planting section 327000
  - Include Athletic Surfacing section 321823
  - Include Alternate #1
- **Revise** 000416 Schedule of Unit Prices
- **Revise** 011000 Summary to include 'Work Provided by Owner'
- **Add** section 012300 Alternates
- **Revise** 116800 Play Field Equipment and Structures
  - Included manufacturer for bases, home plate, and pitcher's plate
- **Revise** 312000 Earth Moving to include 'Rain Garden Mix' product
- **Revise** 321816.13a Playground Prot Surfacing – Engineered Wood Fiber
- **Revise** 321816-13b Playground Prot Surfacing – Poured in Place Rubber
- **Revise** 321816-13c Playground Protective Surfacing - Artificial Turf
- **Add** 321816-13d AquaFlex Porous Surface
- **Add** 321823 Athletic Surfacing

- **Revise** 323114 SF - Chain Link Fences and Gates to include Unlimited Sports Solutions as an approved equal for netting and net posts

Drawing Revisions

- **L2.0 Site Preparation and Removals Plan – North**
  - Added sequencing note
  - Revise temporary construction fencing layout
  - Revise temporary tree fencing layout
- **L2.1 Site Preparation and Removals Plan – South**
  - Revise temporary construction fencing layout
  - Revise temporary tree fencing layout
  - Revise clearing and grub limits in south woodland
  - Added approximate limits and notes regarding threatened and endangered species
- **L2.2 Site Preparation and Removals Plan – Enlargement**
  - Revise temporary construction fencing layout
- **L3.0 Layout and Materials Plan – North**
  - Detail callouts added to concrete repair work north of playground
  - Detail callouts added to concrete paving adjacent to batting cage
- **L3.1 Layout and Materials Plan – South**
  - Depressed curb detail callouts added
  - Revised woodland path layout
- **L3.2 Layout and Materials Plan – Enlargement**
  - Detail callout for Outcropping Stone and Asphalt Paving – Pedestrian added
- **L4.0 Planting Plan – North**
  - Revised limits of turf grass seed restoration
- **L4.1 Planting Plan – South**
  - Revised limits of turf grass seed restoration
  - Revised limits of rain garden plugs
  - Revised limits of woodland plug mix
  - Reduced planting beds adjacent to parking lot
- **L4.2 Planting Plan – Enlargement**
  - Revised limits of turf grass seed restoration
- **L5.1 Details**
  - Revised Detail #5 – Depressed Curb
- **L5.2 Details**
  - Added Detail #8 – Stone Outcropping
- **L5.3 Details**
  - Revised Detail #5 – Backstop
- **L5.4 Details**
  - Revised Detail #3 – Chain Link Fence
    - Populated fence schedule
  - Revised Detail #4 – Chain Link Fence Footing in concrete paving
  - Revised Detail $5 – Fencing / Netting Elevation
    - Revised gate widths to 4’ wide
    - Revised net post spacing

- **L5.5 Details**
    - Revised Detail #1 – Dugout Enlargement
        - Revised Callouts
    - Revised Detail #2 – Dugout Elevation A
        - Revised chain link fence height
    - Revised Detail #3 – Dugout Elevation B
        - Revised labels
    - Revised Detail #4 – Bike Rack and Repair Station Enlargement
        - Noted items supplied by Owner
    - Revised Detail #6 – Bagg Toss Boards
        - Corrected Concrete Paving – Pedestrian callout
- **L5.6 Details**
    - Revised Detail #1 – Batting Cage Layout
        - Corrected Artificial Turf callout
    - Revised Detail #4 – Concrete Curb at Artificial Turf
        - Corrected Artificial Turf callout
- **C1.0 SESC Plan**
    - Revised perimeter erosion barrier
    - Revised rip rap locations
- **C2.3 Grading and Drainage Plan Enlargement**
    - Revised grading along updated woodland path layout
    - Revised storm sewer, catch basin, and flared end section locations

cc: Corey Wierema, City of Lake Forest
Lacey Lawrence, RVi
Mirandi Berger, RVi

encl: 000010 Table of Contents
000410 Bid Form
000415A Schedule of Values
000416 Schedule of Unit Prices
011000 Summary
012300 Alternates
116800 Playfield Equipment and Structures
312000 Earth Moving
321816.13a Playground Prot Surfacing – Engineered Wood Fiber
321816-13b Playground Prot Surfacing – Poured in Place Rubber
321816-13c Playground Protective Surfacing - Artificial Turf
321816-13d AquaFlex Porous Surface
321823 Athletic Surfacing
323114 SF - Chain Link Fences and Gates
L2.0 Site Preparation and Removals Plan – North, dated November 11, 2026
L2.1 Site Preparation and Removals Plan – South, dated November 11, 2026
L2.2 Site Preparation and Removals Plan – Enlargement, dated November 11, 2026
L3.0 Layout and Materials Plan – North, dated November 11, 2026
L3.1 Layout and Materials Plan – South, dated November 11, 2026

L3.2 Layout and Materials Plan – Enlargement, dated November 11, 2026
L4.0 Planting Plan – North, dated November 11, 2026
L4.1 Planting Plan – South, dated November 11, 2026
L4.2 Planting Plan – Enlargement, dated November 11, 2026
L5.1 Details, dated November 11, 2026
L5.2 Details, dated November 11, 2026
L5.3 Details, dated November 11, 2026
L5.4 Details, dated November 11, 2026
L5.5 Details, dated November 11, 2026
L5.6 Details, dated November 11, 2026
C1.0 SESC Plan, dated November 11, 2026
C2.3 Grading and Drainage Plan Enlargement, dated November 11, 2026
2026 HydroLogix Design Guide Sales Sheet
Pre-Bid Agenda, dated November 5, 2026

End of Addendum 03

SECTION 323114 – CHAIN LINK FENCES AND GATES

PART 1 - GENERAL

1.1 SECTION INCLUDES

A. Polymer coated chain link fence posts, fabric, gates, netting, and accessories.

1.1 RELATED SECTIONS

A. Section 321313 – Concrete Paving.

B. Section 033000 – Cast-In-Place Concrete

C. See manufacturer's specifications for additional information pertaining to the Netting Fence included in this section.

1.3 SUBMITTALS

A. Shop drawings: Show locations, components, materials, dimensions, sizes, weights, and finishes of components. Include plans, gate elevations, sections, details of post anchorage, attachment, bracing, and other required installation and operational clearances.

B. Product data: Manufacturer's catalog cuts indicating material compliance and specified options.

C. Samples: Color selections for polyolefin finishes. If requested, samples of materials (e.g., fabric, wires, and accessories).

PART 2 - PRODUCTS

2.1 MANUFACTURER

A. Products from qualified manufacturers having a minimum of five years' experience manufacturing thermally fused chain link fencing will be acceptable by the architect as equal. If approved in writing, ten days prior to bidding, and if they meet the following specifications for design, size, gauge of metal parts and fabrication.

B. Obtain chain link fences and gates, including accessories, fittings, fastenings, from a single source.

C. Approved Manufacturers:

1. Master Halco / Anchor Fence, Orange, CA, (800) 229-5615 or approved equal

2. Merchants Metals ColorBond® System, Houston, TX 77032, (888) 260-1600 or approved equal

D. Supplier: Peerless Fence (800) 543-6511 or approved equal

E. Obtain line fence netting from preferred source.
1. Preferred Vendors:
a. Midwest Netting Solutions, (847) 729-6387
1) Contact: Mark Lato info@midwestnettingsolutions.com
b. Unlimited Sport Solutions, (630) 584-7710
1) Contact: Brad Knepper bradk@peerlessfence.com

2.2 CHAIN LINK FENCE FABRIC

A. General: Comply with ASTM A392, CLFMI CLF 2445, and requirements indicated below:

B. Polymer Coated Steel Fabric:
1. ASTM F668, wire gauge specified is that of the metallic coated steel wire core
2. Class 2b fused and adhered
3. Color: Black, complying with ASTM F934

C. Steel Chain Link Mesh:
1. Produced in one piece widths three (3) feet to twelve (12) feet
2. Mesh Size: 2 inches, typical
3. Gauge: 9-gauge core (0.148" diameter) and 6-gauge core

D. Fabric Selvage:
1. Knuckled at both top and bottom selvages

2.3 STEEL FENCE FRAMING

A. Round Steel Pipe and Rail:
1. Schedule 40 standard weight pipe, in accordance with ASTM F1083, 1.8 oz/ft² (550 g/m²) hot-dipped galvanized zinc exterior and interior coating.
2. Minimum yield strength of 30,000 psi (205 MPa).
3. Sizes as indicated on the plans.

B. Polymer Coated Pipe:
1. Polymer coated pipe shall have a PVC coating fused and adhered to the exterior zinc coating of the galvanized pipe in accordance with ASTM F1043. The minimum thickness of the PVC coating shall be 10 mils (0.254 mm). Color Black per ASTM F934.
2. End, Corner and Gate Post: As detailed.
3. Line Post: As detailed.
4. All other components: As detailed.

2.4 POLYMER COATED ACCESSORIES

A. Chain link fence accessories: (ASTM F 626) Provide items required to complete fence system. Galvanize each ferrous metal item and finish to match framing.

B. Post caps: Pressed steel, weathertight closure cap for tubular posts. For each line post provide tops to permit passage of top rail.

C. Top rail and brace ends: Pressed steel per ASTM F626, for connection of rail and brace to terminal posts.

D. Wire ties and clips: 10 gauge [0.135” (3.43 mm)] galvanized steel wire for attachment of fabric to line posts. Double wrap 13 gauge [0.092” (2.324 mm)] for rails and braces. Hog ring ties of 12-1/2 gauge [0.0985” (2.502 mm)] for attachment of fabric to tension wire.

E. Brace and tension (stretcher bar) bands: Pressed steel. At square post provide tension bar clips.

F. Tension (stretcher) bars: One-piece lengths equal to 2” (50 mm) less than full height of fabric with a minimum cross-section of 3/16” x 3/4” (4.76 mm x 19 mm) or equivalent fiberglass rod. Provide tension (stretcher) bars where chain link fabric meets terminal posts.

H. Nuts and bolts are galvanized but not polyolefin coated. Cans of Polyolefin touch up paint are available to color coat nuts and bolts if desired.

2.5 SWING GATES

A. Gate Frames: Gates to be fabricated in accordance with ASTM F 900 using galvanized steel members 1.90" OD weighing 2.28 lb./ft, welded at all corners. Welded joints coated, employing a zinc-rich paint. Gates over 8' high or 8' wide shall have horizontal or vertical members as shown in drawings.

B. Chain link fabric filler shall match that shown in the fence section. If the gate is free standing and there is no fence attached, any of the fabric from the fence sections may be used at the direction of the architect or property owner. Fabric to be attached to frame by means of tension on fabric bands at the external vertical members and attached by means of tie wires to all horizontal and any internal vertical members. These bands and ties to be a maximum of 15" centers. The fabric is attached to the bands using a fabric or tension bar. On gate leaves over 8' in width, a truss rod and turnbuckle shall be welded into the frame to allow for adjustment and prevent metal fatigue.

C. All fittings to be galvanized.

D. Hinges: Structurally capable of supporting gate and capable of swinging 180° in or out.

E. Latch: Fulcrum type Pioneer Latch with provision for pad locking.

F. Double gates: Provide drop bar to hold one leaf stationary.

G. Keepers (hold backs) should be provided for any gate leaf 5' or greater. This should hold the gate in the open position.

H. PVC coating applied over galvanized pipe and fasteners in accordance with ASTM A 870 and matching the color of the adjoining fence framework. Color: Black

I. Gate Posts 3” OD / 5.79 lbs./ft

J. Type B steel pipe produced in accordance with commercial standards. Minimum yield strength of 50,000 psi (344 MPa). Cold formed and welded per ASTM F 1043. Zinc overcoat, minimum 0.9oz/ft^2 with a conversion coating and verifiable polymer film.

2.6 SETTING MATERIALS

A. Concrete: Minimum 28-day compressive strength of 3,000 psi (20 MPa).

2.7 LINE FENCE NETTING

A. Backstop Poles: (6) 33’ Long x 8.625” OD x .322 Wall x Black weather treated steel poles will be secured in the ground 9’ deep utilizing 24” boring and 4,000 PSI concrete to attain (6) 24’ AGL heights.

B. Chain Link Fencing: (Field Fencing) : 6’H x 131’L of (#8) Gauge black vinyl coated chain link with 1 5/8” top and bottom rail; &8’ H x 91’L of (#8) Gauge black vinyl coated chain link with 1 5/8 top and bottom rail .The 8’ fencing includes (2) 5’w single swing gates; Additional Fencing Included: Backstop Fencing: 24’ H x 60’L (#6) Gauge black vinyl coated chain link with 1 5/8 top, middle, bottom rails.

C. Hardware: (5/16”) 1 x 7 Galvanized guy strand cable will be secured to the top of each pole utilizing galvanized oval eyebolts and (5/16”) strandvises.

D. #36 Baseball Netting: 1-7/8” Mesh, Nylon, Knotted, black, weather treated, rope bordered on the square baseball panels will be secured to the cables utilizing hog rings and snap hooks. NOVA24 Netting: 1-7/8” lightweight Mesh, Nylon, knotted, black, weather treated with rope bordered on the square will be used for the custom hood panel on the Backstop.

PART 3 - EXECUTION

3.1 EXAMINATION

A. Verify areas to receive fencing are completed to final grades and elevations.

B. Ensure property lines and legal boundaries of work are clearly established.

3.2 CHAIN LINK FENCE FRAMING INSTALLATION

A. Install chain link fence in accordance with ASTM F 969 and manufacturer’s instructions.

B. Locate terminal post at each fence termination and change in horizontal or vertical direction of 30° or more.

C. Space line posts uniformly at 8 feet (3040 mm) on center or as indicated.

D. Concrete set posts: Drill holes in firm, undisturbed or compacted soil. Holes should have a diameter 4 times greater than outside of post, and depths approximately 6” (150 mm) deeper than post bottom. Excavate deeper as required for adequate support in soft and loose soils, and for posts with heavy lateral loads. Set post bottom 36” (900 mm) below surface when in firm, un-

disturbed soil. Place concrete around posts in a continuous pour. Trowel finish around post. Slope to direct water away from posts.

E. Check each post for vertical and top alignment and maintain in position during placement and finishing operations.

F. Bracing: Install horizontal pipe brace at mid-height for fences 6’ (1830 mm) and over, on each side of terminal posts. Firmly attach with fittings.

G. Top rail: Install lengths, 21’ (6400 mm). Connect joints with sleeves for rigid connections during expansion/contraction.

H. Center Rails: Install mid rails between posts with boulevard clamps.

I. Bottom Rails: Install bottom rails between posts with boulevard clamps.

3.3 CHAIN LINK FABRIC INSTALLATION

A. Fabric: Install fabric on security side and attach so that fabric remains in tension after pulling force is released. Leave approximately 1.5” (50 mm) between finish grade and bottom selvage. Attach fabric with wire ties to line posts at 15” (380 mm) on center and to rails, braces, and tension wire at 24” (600 mm) on center.

B. Tension (stretcher) bars: Pull fabric taut; thread tension bar through fabric and attach to terminal posts with bands or clips spaced maximum of 15” (380 mm) on center.

3.5 ACCESSORIES

A. Tie wires: Bend ends of wire to minimize hazard to persons and clothing.

B. Fasteners: Install nuts on side of fence opposite fabric side for added security.

3.6 CLEANING

A. Clean up debris and unused material and remove from the site.

END OF SECTION 323114

SECTION 000010 – TABLE OF CONTENTS

INTRODUCTORY INFORMATION

000010 Table of Contents
000015 List of Drawings
000020 Legal Notice

BIDDING REQUIREMENTS

000100 Invitation to Bid
000200 Instructions to Bidders
000300 Information Available to Bidders
000405 Bid Submittal Checklist
000410 Bid Form
000415 Schedule of Values
000416 Schedule of Unit Prices
000420 Substitution Form
000435 Bid Security
000440 Material Sources and Subcontracted Work Form
000447 Wage Rates
000455 Contractor's Qualifications Form
000460 Equal Employment Opportunity
000470 Affidavit of Compliance
000475 OSLAD Contract Compliance
000476 Sexual Harassment Policy Certification
000477 Drug Free Workplace Certification
000478 Tax Compliance Affidavit
000479 Employment IL Workers

CONTRACTING REQUIREMENTS

000510 Forms Required with Owner Contractor Agreement
000520 Agreement between Owner and Contractor
000700 General Conditions
000800 Supplementary Conditions

Division 01 - GENERAL REQUIREMENTS

011000 Summary
012200 Unit Prices
012300 Alternates
012600 Contract Modification Procedures
012900 Payment Procedures
013100 Project Management and Coordination
013200 Construction Progress Documentation
013300 Submittal Procedures
014000 Quality Requirements

014200 References
015000 Temporary Facilities and Controls
015639 Temporary Tree and Plant Protection
016000 Product Requirements
017300 Execution
017329 Cutting and Patching
017419 Construction Waste Management and Disposal (CCDD)
017700 Closeout Procedures
017823 Operation and Maintenance Data
017839 Project Record Documents
017900 Demonstration and Training

Division 03 – CONCRETE

033000 Cast-In-Place Concrete

Division 04 – MASONRY

044300 Stone Masonry

Division 11 – EQUIPMENT

116800 Play Field Equipment and Structures

Division 26 – EXTERIOR LIGHTING

Electrical Specifications Included on Electrical Drawings

Division 31 – EARTHWORK

311000 Site Clearing
312000 Earth Moving
312500 Soil Erosion and Sediment Control

Division 32 – EXTERIOR IMPROVEMENTS

321216 Asphalt Paving
321313 Concrete Paving
321816.13a Playground Protective Surfacing – Engineered Wood Fiber
321816.13b Playground Protective Surfacing – Poured in Place
321816.13c Playground Protective Surfacing – Artificial Turf
321816.13d Playground Protective Surfacing – AquaFlex Porous Surface
321823 Athletic Surfacing
323114 Chain Link Fences and Gates
327000 Native Planting
329200 Turf and Grasses
329300 Plants

Division 33 – UTILITIES

331100 Water Utility Distribution Piping
334100 Storm Utility Drainage Piping

APPENDIX

Geotechnical Investigation Report

END OF SECTION 000010

SECTION 000410 – BID FORM

CONTRACTOR: _____

_____
Address

_____ _____
Phone # Fax #

TO: **City of Lake Forest**
800 N. Field Drive
Lake Forest, Illinois 60045

PROJECT: **South Park Phase Two**
150 S. Maywood Road
Lake Forest, Illinois 60045

Having read the Specifications and examined the Drawings entitled: South Park Phase Two, dated October 28, 2026, as prepared by RVi Planning + Landscape Architecture for the construction of said Project and having also received, read, and taken into account all ADDENDA thereto as follows:

**LIST IN THE FOLLOWING SPACES, THE NUMBER OF AND DATE OF EACH ADDENDUM RECEIVED.*

ADDENDUM NOS.:_____

and having inspected the site and the conditions affecting and governing the construction of the Project Work, the undersigned proposes to furnish all material and perform all labor, as specified and described in the Specifications and as shown in the Drawings, for the following stipulated lump sums:

***ENTER AMOUNTS FROM 000415-SCHEDULE OF VALUES (round base bids and alternate amounts to nearest whole dollar)*

BASE BID:
TOTAL MATERIALS AND LABOR FOR THE SUM OF:

** _____ DOLLARS (** $ _____)

ALTERNATE #1: Omit Berms and Haul Off Excess Material
TOTAL ADD OR DEDUCT (circle one) FOR MATERIALS AND LABOR FOR THE SUM OF:

**** _____ DOLLARS (** $ _____)**

In submitting the bid, the undersigned agrees:

1. To enter into a lump sum Contract agreement with the Owner and to construct the work as drawn and specified for the stated lump sum amounts regardless of quantity discrepancies. No additional payments will be made due to quantity discrepancies.

2. To hold the bid open for 60 days days after bid opening.

3. To enter into a Contract within 14 days of Notice of Award.

4. To furnish a Performance Bond and a Labor and Material Payment Bond for the full amount of the Contract in accordance with 000800-Supplementary Conditions, within 20 days of Contract Award.

5. To furnish evidence of insurance in accordance with 000800-Supplementary Conditions prior to signing the Contract.

6. To furnish a preliminary Construction Schedule in accordance with Section 001310-Project Management and Coordination prior to signing the Contract.

7. To forfeit the Bid Security to the Owner as payment of damages due to delay if the undersigned fails to execute a Contract as required.

8. To begin the work no later than the date specified in the Contract, and to substantially complete the work no later than indicated in section 000100 Invitation to Bid.

_____
(COMPANY'S NAME)

_____
(BUSINESS ADDRESS & PHONE)

_____ _____
(PREPARER'S SIGNATURE) (DATE)

(SEAL - If by Corporation)

Subscribed and sworn to before me this

_____ day of _____, 2026

_____
NOTARY PUBLIC

END OF SECTION 000410

SECTION 000415 - SCHEDULE OF VALUES

Date: **October 28, 2026**
RE: South Park Phase Two

NOTES:

1. Bidder to complete Section 000415-Schedule of Values and enter total amount in appropriate space in Section 000410-Bid Form.

2. Bidder is responsible for performing all quantity take-offs necessary to estimate the work as drawn and specified.

3. The successful bidder will be required to enter into a lump sum contract agreement with the owner. No additional payments will be made due to discrepancies between bidder's estimated quantities and the actual installed quantities to construct the work as drawn and

4. This Schedule of Values form will become part of the Contract Documents and will be used as a basis for reviewing the Contractor's Applications for Payment.

5. This Schedule of Values form is available in Microsoft Excel format from the landscape architect upon request.

BASE BID

Section	Description	Bidder's Est. Qty	Unit	Unit Cost	Extended Cost	Subtotal
0 & 1	**Contracting and General Requirements**					
	contracting requirements		LS			
	general conditions		LS			
	layout and as-built survey		LS			
					Section Subtotal:	
015000	**Temporary Facilities and Controls**					
	temporary construction fence		LF			
	tree protection fence		LF			
	silt fence		LF			
	inlet protection		EA			
	stabilized construction entrance		LS			
	concrete washout		LS			
	RR-3 riprap		SY			
	erosion control blanket		SY			
					Section Subtotal:	
033000	**Cast-in-Place Concrete**					
	splash pad equipment footings	included in equipment installation				
	fencing, backstop, and netting footings	included in fence/net installation				
	dugout structure footings		CY			
	shelter footings		CY			
	fitness equipment footings		CY			
	hammock footings		CY			
	batting cage footings		CY			
					Section Subtotal:	
044300	**Stone Masonry**					
	limestone boulders		TON			
	flagstone paving		SF			
	limestone outcropping stones		TON			
					Section Subtotal:	

116800	**Play Field Equipment and Structures**					
	shelter - installation		**LS**			
	drinking fountain - installation		**LS**			
	dugout structure - installation		**LS**			
	bag toss game - installation		**LS**			
	batting cage posts/netting - installation		**LS**			
	hammocks - installation		**LS**			
	splash pad equipment - installation		**LS**			
	fitness equipment - installation		**LS**			
	bases, home plate, and pitchers plate		**LS**			
	clay bricks - installation		**LS**			
					Section Subtotal:	
265600	**Facility Water Distribution Piping**					
	water service connection		**LS**			
	2" RPZ with enclosure		EA			
	2" valve & box		EA			
	2" water service line		LF			
	connection to existing water line		**LS**			
	splash pad control cabinet		**LS**			
					Section Subtotal:	
265600	**Exterior Lighting**					
	conduit and wiring		LS			
	outlets and shelter light		LS			
	batting cages electrical		LS			
	splash pad bonding		LS			
					Section Subtotal:	
311000	**Site Clearing**					
	clearing and grubbing		SF			
	tree removal		EA			
	remove and dispose backstop fencing		EA			
	remove and dispose chain link fencing		LF			
	remove and dispose dugouts		EA			
	remove and dispose player benches		EA			
	remove and dispose bases and anchors		LS			
	remove and dispose drinking fountain		LS			
	remove and dispose concrete paving		SF			
	remove and dispose gravel paving		SF			
	remove and dispose asphalt paving		SF			
	remove and dispose clay infield		CY			
					Section Subtotal:	
312000	**Earth Moving**					
	topsoil strip and respread		CY			
	earthwork		**CY**			
	haul-off unsuitable/excess material		CY			
	rain garden engineered soil		CY			
	rain garden geotextile fabric		SY			
	overexcavate 12" and backfill with structural soil and geogrid	**1**	**ALLOW**	**$**	**50,000**	
					Section Subtotal:	
321216	**Asphalt Paving**					
	asphalt paving - vehicular		SY			
	asphalt paving - pedestrian		SY			
	asphalt patching		SY			
	pavement markings - crosswalks and striping		LS			
	ADA parking sign		**EA**			
	bollards		EA			
					Section Subtotal:	
321313	**Concrete Paving and Curbs**					
	concrete paving - pedestrian		**SF**			
	concrete paving - splash pad		SF			
	concrete curb and gutter		**LF**			
	playground curb		**LF**			
	depressed curb		**LF**			
	detectable warning		LF			
					Section Subtotal:	

321816	**Playground Protective Surfacing**					
	artificial turf surfacing - stone base		**CY**			
	playground surfacing - artificial turf		SF			
	playground surfacing - ewf		CY			
	playground surfacing - aquaflex porous		**SF**			
	playground surfacing - PIP		SF			
					Section Subtotal:	
321823	**Athletic Surfacing**					
	clay infield mix		**CY**			
					Section Subtotal:	
323113	**Chain Link Fences and Gates**					
	backstop system w/ net hood and line netting		LS			
	chainlink fence, coated, 8ft HT		LF			
	chainlink fence, coated, 10ft HT		LF			
	single swing gate, coated, 10ft HT		EA			
	line netting		LF			
					Section Subtotal:	
327000	**Native Planting**					
	rain garden plugs		**EA**			
	native woodland seeding		**SY**			
	native woodland plugs		**EA**			
					Section Subtotal:	
329200	**Turf and Grasses**					
	turf grass seeding		SY			
					Section Subtotal:	
329300	**Plants**					
	shade tree, 3" cal.		EA			
	evergreen tree, 8' ht.		EA			
	ornamental tree, 8' ht.		EA			
	evergreen shrub, 3gal.		EA			
	deciduous shrub, 2gal.		EA			
	ornamental grasses, 1gal		EA			
	perennials, 1gal		EA			
	planting soil amendments		CY			
	mulch		CY			
					Section Subtotal:	
334100	**Storm Utility Drainage Piping**					
	2' dia. catch basin		EA			
	4' dia. manhole		EA			
	12" metal flared end section		EA			
	4" underdrain pipe		LF			
	6" underdrain pipe		LF			
	4" storm sewer		LF			
	6" storm sewer		LF			
	12" storm sewer		LF			
	connection to existing structure		EA			
	adjust rim elevation & replace frame		EA			
	adjust rim elevation & replace lid		EA			
	underdrain cleanout		EA			
	underdrain CA-7		CY			
	underdrain geotextile fabric		SY			
					Section Subtotal:	
					BASE BID TOTAL:	

ALTERNATE #1: Omit Berms and Haul Off Excess Material

015000	**Temporary Facilities and Controls**					
	omit erosion control blanket		**SY**			
					Section Subtotal:	
312000	**Earth Moving**					
	omit earthwork		**LS**			
	haul off/export excess material		**CY**			
					Section Subtotal:	
329200	**Turf and Grasses**					
	omit turf grass seeding		**SY**			
					Section Subtotal:	
					ALTERNATE #1 TOTAL:	

SECTION 000416 - SCHEDULE OF UNIT PRICES

Date: October 28, 2026
RE: South Park Phase Two

NOTES:

1. Bidder to enter the unit cost for each item on a basis of the unit given. See Section 001270-Unit Prices for specific information.

2. This Schedule of Unit Prices will become part of the Contract Documents and will be used as a basis for payment and to substantiate Change Order requests.

3. This Schedule of Unit Prices form is available in Microsoft Excel format from the landscape architect upon request.

Item	Description	Qty.	Unit	Unit Cost
329300	**Plants**			
	import topsoil and over excavate	**1**	**CY**	
312000	**Earth Moving**			
	over excavate and backfill with filter fabric and structural fill	**1**	**CY**	

END OF SECTION 000416

SECTION 011000 - SUMMARY

PART 1 - GENERAL

1.1 SUMMARY

A. This Section includes the following:

1. Work covered by the Contract Documents.
2. **Work provided by Owner.**
3. Work phases.
4. Work under other contracts.
5. Use of premises.
6. Owner's occupancy requirements.
7. Specification formats and conventions.

B. See Division 01 Section "Multiple Contract Summary" for division of responsibilities for the Work.

1.2 WORK COVERED BY CONTRACT DOCUMENTS

A. Project Identification: South Park Phase Two

1. Project Location: 150 S. Maywood Road, Lake Forest Illinois 60045

B. Owner: City of Lake Forest

C. Landscape Architect: Planning + Landscape Architecture/Hitchcock Design Group. 22 E. Chicago Avenue, Suite 200A, Naperville, Illinois 60540

D. Civil Engineer: Hey and Associates, Inc. 26575 W. Commerce Drive, Suite 601, Volo, Illinois 60073

E. Electrical Engineer: Nova Engineering, PC, 2338 Cline Avenue, Schererville, Indiana 46375

F. The Work consists of the following:

1. The Work includes site removals and clearing, construction fencing, temporary soil erosion and sediment control measures and maintenance, earthwork, asphalt paving, concrete curbs, walks, footings, and paving, stone outcropping, ballfield equipment installation, splash pad equipment installation, fitness equipment installation, drinking fountain installation, pour-in place rubber play surfacing, site utilities (water and storm), mulch path, chain link fencing, backstop, and gates, ballfield netting, ballfield infield, dugout installation, shelter installation, landscape planting, native planting, and turf seeding.

G. Project will be constructed under a single prime contract.

1.3 WORK PROVIDED BY OWNER

A. General: Cooperate fully with separate contractors or Owner's work forces so work on those contracts may be carried out smoothly, without interfering with or delaying work under this contract. Coordinate the Work of this Contract with work performed under separate contracts.

1. Description

PI	**Picnic Shelter**
PI	**Dugout Structures**
PI	**Splash Pad Equipment**
PI	**Hammocks**
PI	**Bag Toss Boards**
PI	**Drinking Fountain**
PI	**Fitness Equipment**
PI	**Batting Cage Posts and Nets**
G	**Grill**
O	**Bike Racks and repair station**
O	**Game Tables**
O	**Interpretive Signs**
O	**Benches**
O	**Bleachers**
O	**Player Benches**
P	**Bases, Home Plate, Pitcher's Plate**

2. Key

G	**Contractor salvage and reinstall**
O	**Owner purchase and install**
P	**Contractor Purchase and Install**
PI	**Owner purchase and Contractor install**

1.4 USE OF PREMISES

A. General: Contractor shall have full use of premises for construction operations, including use of Project site, during construction period. Contractor's use of premises is limited only by Owner's right to perform work or to retain other contractors on portions of Project.

B. Use of Site: Limit use of premises to areas within the Contract limits indicated. Do not disturb portions of Project site beyond areas in which the Work is indicated.

1. Owner Occupancy: Allow for Owner occupancy of Project site and use by the public.
2. Driveways and Entrances: Keep driveways and entrances serving premises clear and available to Owner, Owner's employees, and emergency vehicles at all times. Do not use these areas for parking or storage of materials.

    a. Schedule deliveries to minimize use of driveways and entrances.
    b. Schedule deliveries to minimize space and time requirements for storage of materials and equipment on-site.

C. Use of Existing Building: Maintain existing building in a weathertight condition throughout construction period. Repair damage caused by construction operations. Protect building and its occupants during construction period.

1.5 OWNER'S OCCUPANCY REQUIREMENTS

A. Full Owner Occupancy: Owner will occupy site during entire construction period. Cooperate with Owner during construction operations to minimize conflicts and facilitate Owner usage. Perform the Work so as not to interfere with Owner's day-to-day operations. Maintain existing exits, unless otherwise indicated.

1. Maintain access to existing walkways, corridors, and other adjacent occupied or used facilities. Do not close or obstruct walkways, corridors, or other occupied or used facilities without written permission from Owner and authorities having jurisdiction.

B. Owner Occupancy of Completed Areas of Construction: Owner reserves the right to occupy and to place and install equipment in completed areas of site, before Substantial Completion, provided such occupancy does not interfere with completion of the Work. Such placement of equipment and partial occupancy shall not constitute acceptance of the total Work.

1. Landscape architect will prepare a Certificate of Substantial Completion for each specific portion of the Work to be occupied before Owner occupancy.
2. On occupancy, Owner will assume responsibility for maintenance and custodial service for occupied portions of building or site.

1.6 SPECIFICATION FORMATS AND CONVENTIONS

A. Specification Format: The Specifications are organized into Divisions and Sections using the 16-division format and CSI/CSC's "MasterFormat" numbering system.

1. Division 01: Sections in Division 01 govern the execution of the Work of all Sections in the Specifications.

B. Specification Content: The Specifications use certain conventions for the style of language and the intended meaning of certain terms, words, and phrases when used in particular situations. These conventions are as follows:

1. Abbreviated Language: Language used in the Specifications and other Contract Documents is abbreviated. Words and meanings shall be interpreted as appropriate. Words implied, but not stated, shall be inferred as the sense requires. Singular words shall be interpreted as plural, and plural words shall be interpreted as singular where applicable as the context of the Contract Documents indicates.
2. Imperative mood and streamlined language are generally used in the Specifications. Requirements expressed in the imperative mood are to be performed by Contractor. Occasionally, the indicative or subjunctive mood may be used in the Section Text for clarity to describe responsibilities that must be fulfilled indirectly by Contractor or by others when so noted.

a. The words "shall," "shall be," or "shall comply with," depending on the context, are implied where a colon (:) is used within a sentence or phrase.

PART 2 - PRODUCTS (Not Used)

PART 3 - EXECUTION (Not Used)

END OF SECTION 011000

SECTION 012300 - ALTERNATES

PART 1 - GENERAL

1.1 SUMMARY

A. This Section includes administrative and procedural requirements for alternates.

1.2 DEFINITIONS

A. Alternate: An amount proposed by bidders and stated on the Bid Form for certain work defined in the Bidding Requirements that may be added to or deducted from the Base Bid amount if Owner decides to accept a corresponding change either in the amount of construction to be completed or in the products, materials, equipment, systems, or installation methods described in the Contract Documents.

1. The cost or credit for each alternate is the net addition to or deduction from the Contract Sum to incorporate alternate into the Work. No other adjustments are made to the Contract Sum.

1.3 PROCEDURES

A. Coordination: Modify or adjust affected adjacent work as necessary to completely integrate work of the alternate into Project.

1. Include as part of each alternate, miscellaneous devices, accessory objects, and similar items incidental to or required for a complete installation whether or not indicated as part of alternate.

B. Notification: Immediately following award of the Contract, notify each party involved, in writing, of the status of each alternate. Indicate if alternates have been accepted, rejected, or deferred for later consideration. Include a complete description of negotiated modifications to alternates.

C. Execute accepted alternates under the same conditions as other work of the Contract.

D. Schedule: A Schedule of Alternates is included at the end of this Section. Specification Sections referenced in schedule contain requirements for materials necessary to achieve the work described under each alternate.

PART 2 - PRODUCTS (Not Used)

PART 3 - EXECUTION

3.1 SCHEDULE OF ALTERNATES

A. ALTERNATE #1: OMIT BERMS AND HAUL OFF EXCESS MATERIAL
   1. Omit Earthwork
   2. Omit turf grass seeding
   3. Omit erosion control blanket
   4. Haul off/export excess material

END OF SECTION 012300

SECTION 116800 - PLAY FIELD EQUIPMENT AND STRUCTURES

PART 1 - GENERAL

1.1 SUMMARY

A. This Section includes the following:
   1. Picnic Shelter, *purchased by Owner, installed by Contractor*
   2. Dugout structure, *purchased by Owner, installed by Contractor*
   3. Splash Pad Equipment, *purchased by Owner, installed by Contractor*
   4. Hammocks, *purchased by Owner, installed by Contractor*
   5. Bag toss, *purchased by Owner, installed by Contractor*
   6. Drinking fountain*, purchased by Owner, installed by Contractor*
   7. Fitness equipment, *purchased by Owner, installed by Contractor*
   8. Bases, home plate, and pitcher's plate*, purchased and installed by Contractor*

B. See manufacturer's specifications for additional information.

1.2 SUBMITTALS

A. Product Data: For each type of product indicated.

B. Shop Drawings: Show fabrication and installation details for playground equipment and structures.

C. Coordination Drawings: Plans, drawn to scale, on which the following items are shown and coordinated with each other, based on input from installers of the items involved:

   1. Extent of surface systems and use zones for equipment.
   2. Critical heights for playground surface, or fall heights for equipment.

D. Samples: For each type of exposed finish.

E. Product certificates.

F. Material Certificates: Wood Preservative Treatment: Include certification by treating plant that states type of preservative solution and pressure process used, net amount of preservative retained, and compliance with applicable standards.

G. Product test reports.

1.3 DELIVERY, HANDLING, AND STORAGE

A. Contractor shall coordinate the delivery and acceptance of the play equipment with the Owner.

B. Contractor shall check all materials delivered to the site to ensure that the correct materials have been received and are in good condition. The installing contractor will be responsible for

notifying the Owner and Supplier of any missing or damaged items within 10 days of delivery. If the installing contractor fails to notify the Owner and Supplier within 10 days of delivery, or finds missing or damaged items after this date, they will assume financial responsibility for repairs and replacements.

1.4 QUALITY ASSURANCE

A. Installer Qualifications: An employer of workers trained and approved by manufacturer.

B. Safety Standards: Provide playground equipment complying with or exceeding requirements in the following:

1. ASTM F 1487.
2. CPSC No. 325.

1.5 WARRANTY

A. Contractor to provide a letter of compliance from manufacturer's representative completed during physical inspection of final installation.

B. Manufacturers standard warranty

1.6 COORDINATION

A. Coordinate construction of equipment use zones and fall heights during installation of playground equipment with installation of protective surfacing. Contractor is responsible for ensuring that the proper use zone has been constructed around each piece of play equipment, and that they comply with ASTM F1487 / CPSC No. 325.

B. Sequence work so protective surfacing can be installed immediately after concrete footings have set. Contractor responsible for barricading all play equipment to prevent use until the protective surfacing has been installed.

PART 2 - PRODUCTS

1.7 PICNIC SHELTER

1. Model: RHS 1616-TG-Shingles, Shingled Rectangular Hip Shelter with Shingles
2. Manufacturer: Cedar Forest Products
3. Contact: Moira Staggs, moiras@nutoys4fun.com
4. Color: To be selected by Owner from manufacturer's standard color range.

1.8 DUGOUT STRUCTURE

1. Model: MS 1030-TG-Shingles, Monoslope 10x30 Shelter with Shingles
2. Manufacturer: Cedar Forest Products
3. Contact: Moira Staggs, moiras@nutoys4fun.com
4. Color: To be selected by Owner from manufacturer's standard color range.

1.9 SPLASH PAD EQUIPMENT

1. Model:
    a. AQ100865 FloraSwirl
    b. AQ100750 GeoMister Small
    c. AQ200499 HydroSphere
    d. AQ100822 Mini FlashFlood
    e. AQ100860 RippleRun with Acrylic Medium Rung
    f. AQ200303 SprayStacker
2. Manufacturer: Aquatix
3. Contact: Moira Staggs, moiras@nutoys4fun.com

1.10 HAMMOCKS

A. Hammock Posts

1. Model: PCMP-CUSTOM 712884 (variant of PCMB805-1002)
2. Manufacturer: Kompan, 605 West Howard Lane, Suite 101, Austin, TX 78753, kompan.com
3. Contact: Tom Kousgaard, TomKou@Kompan.com, 224-813-1293
4. Color: To be selected by Owner from manufacturer's standard color range.
5. Mount: Per manufacturer's instructions

1.11 BAG TOSS

a. Model: BYOB5531 All Concrete Bag Toss Game Set
b. Manufacturer: Doty & Sons Concrete Products, Inc.
c. Contact: Doty & Sons Concrete Products, (800) 233-3907
d. Color: To be selected by Owner from manufacturer's full range, Polished top with Graffiti Sealer and Wax Coat

1.12 DRINKING FOUNTAIN

a. Model: 10145SM Bottle Filler with ADA Hi-lo Fountains
b. Manufacturer: Most Dependable Fountains
c. Contact: Gina Wilch, gina@playdesignscapes.com, 224-324-4597
d. Color: Standard Steel Green
e. Mount: Surface mount

1.13 FITNESS EQUIPMENT

A. HealthBeat Hand Cycler

1. Manufacturer: Landscape Structures
2. Model #: 205938A
3. Supplier: NuToys Leisure Products
4. Contact: Moira Staggs, moiras@nutoys4fun.com

B. HealthBeat Tai Chi Wheels

1. Manufacturer: Landscape Structures

2. Model #: 192463A
3. Supplier: NuToys Leisure Products
4. Contact: Moira Staggs, moiras@nutoys4fun.com

1.14 Ballfield Bases, Home Plate, Pitcher's Plate

A. Home Plate
1. Manufacturer: PW Athletics
2. Model: 8500-00, Home Plate with Anchor
3. Supplier: NuToys Leisure Products
4. Contact: Moira Staggs, moiras@nutoys4fun.com

B. Bases
1. Manufacturer: PW Athletics
2. Model: 8503-00, Complete Set of 3 Bases includes Anchors
3. Supplier: NuToys Leisure Products
4. Contact: Moira Staggs, moiras@nutoys4fun.com

C. Pitcher's Plate
1. Manufacturer: PW Athletics
2. Model: 8510-00, 4-Way Pitching Rubber Bury Mount
3. Supplier: NuToys Leisure Products
4. Contact: Moira Staggs, moiras@nutoys4fun.com

1.15 CONCRETE

A. Concrete Materials and Properties: Comply with requirements in Division 03 Section "Cast-In Place Concrete".

B. Concrete Materials and Properties: Dry-packaged concrete mix complying with ASTM C 387.

1.16 FINISHES, GENERAL

A. Comply with NAAMM's "Metal Finishes Manual for Architectural and Metal Products" for recommendations for applying and designating finishes.

1.17 IRON AND STEEL FINISHES

A. Galvanizing: Hot-dip galvanize to comply with ASTM A 123/A 123M.

1. Hot-dip galvanize steel and iron hardware indicated to be galvanized to comply with ASTM A 153/A 153M.

B. Powder-Coat Finish: Prepare, treat, and coat ferrous metal to comply with resin manufacturer's written instructions.

C. Color: As selected by Architect from manufacturer's full range.

1.18 STAINLESS-STEEL FINISHES

A. Bright, Cold-Rolled, Unpolished Finish: No. 2B finish on exposed faces.

PART 2 - EXECUTION

2.1 INSTALLATION, GENERAL

A. General: Comply with manufacturer's written installation instructions, unless more stringent requirements are indicated. Anchor playground equipment securely, positioned at locations and elevations indicated.

1. Maximum Equipment Height: Coordinate installed heights of equipment and components with finished elevations of protective surfacing. Set equipment so fall heights and elevation requirements for age group use and accessibility are within required limits. Verify that playground equipment elevations comply with requirements for each type and component of equipment.

B. Post and Footing Excavation: Excavate holes for posts and footings as indicated in firm, undisturbed or compacted subgrade soil.

C. Post Set with Concrete Footing: Comply with ACI 301 for measuring, batching, mixing, transporting, forming, and placing concrete.

1. Set equipment posts in concrete footing.
2. Embedded Items: Use setting drawings and manufacturer's written instructions to ensure correct installation of anchorages for equipment.

END OF SECTION 116800

SECTION 312000 - EARTH MOVING

PART 1 - GENERAL

1.1 SUMMARY

A. This Section includes the following:

1. Preparing subgrades for slabs-on-grade walks pavements lawns and grasses and exterior plants.
2. Excavating and backfilling for buildings and structures.
3. Subbase course for concrete walks and pavements.
4. Subbase course for asphalt paving.
5. Excavating and backfilling for utility trenches.

1.2 DEFINITIONS

A. Backfill: Soil material used to fill an excavation.

1. Initial Backfill: Backfill placed beside and over pipe in a trench, including haunches to support sides of pipe.
2. Final Backfill: Backfill placed over initial backfill to fill a trench.

B. Base Course: Course placed between the subbase course and hot-mix asphalt paving.

C. Bedding Course: Course placed over the excavated subgrade in a trench before laying pipe.

D. Borrow Soil: Satisfactory soil imported from off-site for use as fill or backfill.

E. Excavation: Removal of material encountered above subgrade elevations and to lines and dimensions indicated.

1. Authorized Additional Excavation: Excavation below subgrade elevations or beyond indicated lines and dimensions as directed by Architect. Authorized additional excavation and replacement material will be paid for according to Contract provisions changes in the Work.
2. Unauthorized Excavation: Excavation below subgrade elevations or beyond indicated lines and dimensions without direction by Architect. Unauthorized excavation, as well as remedial work directed by Architect, shall be without additional compensation.

F. Fill: Soil materials used to raise existing grades.

G. Structures: Buildings, footings, foundations, retaining walls, slabs, tanks, curbs, mechanical and electrical appurtenances, or other man-made stationary features constructed above or below the ground surface.

H. Subbase Course: Course placed between the subgrade and base course for hot-mix asphalt pavement, or course placed between the subgrade and a cement concrete pavement or a cement concrete or hot-mix asphalt walk.

I. Subgrade: Surface or elevation remaining after completing excavation, or top surface of a fill or backfill immediately below subbase, drainage fill, or topsoil materials.

J. Utilities: On-site underground pipes, conduits, ducts, and cables, as well as underground services within buildings.

1.3 PROJECT CONDITIONS

A. Existing Utilities: Do not interrupt utilities serving facilities occupied by Owner or others unless permitted in writinzg by Architect and then only after arranging to provide temporary utility services according to requirements indicated.

PART 2 - PRODUCTS

2.1 SOIL MATERIALS

A. General: Provide borrow soil materials when sufficient satisfactory soil materials are not available from excavations.

B. Satisfactory Soils: ASTM D 2487 Soil Classification Groups GW, GP, GM, SW, SP, and SM, or a combination of these groups; free of rock or gravel larger than 3 inches any dimension, debris, waste, frozen materials, vegetation, and other deleterious matter.

C. Unsatisfactory Soils: Soil Classification Groups GC, SC, CL, ML, OL, CH, MH, OH, and PT according to ASTM D 2487.

1. Unsatisfactory soils also include satisfactory soils not maintained within 2 percent of optimum moisture content at time of compaction.

D. Aggregate Base Course: Naturally or artificially graded mixture of natural or crushed gravel, crushed stone, and natural or crushed sand; ASTM D 2940; with at least 95 percent passing a 1 1/2-inch sieve and not more than 8 percent passing a No. 200 sieve. Recycled aggregate base course will be acceptable.

E. Engineered Fill: Naturally or artificially graded mixture of natural or crushed gravel, crushed stone, and natural or crushed sand; ASTM D 2940; with at least 90 percent passing a 1-1/2-inch sieve and not more than 12 percent passing a No. 200 sieve.

F. Bedding Course: Naturally or artificially graded mixture of natural or crushed gravel, crushed stone, and natural or crushed sand; ASTM D 2940; except with 100 percent passing a 1-inch sieve and not more than 8 percent passing a No. 200 sieve.

G. Drainage Course: Narrowly graded mixture of washed crushed stone, or crushed or uncrushed gravel; ASTM D 448; coarse-aggregate grading Size 57; with 100 percent passing a 1-1/2-inch sieve and 0 to 5 percent passing a No. 8 sieve.

H. Trench Backfill: Utility trenches shall be backfilled with materials as specified on plans. Cost for backfill shall be included in unit price for utility installation.

I. Rain Garden Soil

1. Rain Garden Mix, available from Midwest Trading, or approved equal
48W805 IL Rt. 64
Maple Park, Illinois 60151
Phone: (630) 365-1990

2.2 ACCESSORIES

A. Filter / Geotextile Fabric: Nonwoven geotextile, specifically manufactured as a drainage geotextile; made from polyolefins, polyesters, or polyamides; and with the following minimum properties determined according to ASTM D 4759 and referenced standard test methods:
1. Grab Tensile Strength: 110 lbf; ASTM D 4632.
2. Tear Strength: 40 lbf; ASTM D 4533.
3. Puncture Resistance: 50 lbf; ASTM D 4833.
4. Water Flow Rate: 150 gpm per sq. ft.; ASTM D 4491.
5. Apparent Opening Size: No. 50; ASTM D 4751.

PART 3 - EXECUTION

3.1 PREPARATION

A. Protect structures, utilities, sidewalks, pavements, and other facilities from damage caused by settlement, lateral movement, undermining, washout, and other hazards created by earthwork operations.

B. Preparation of subgrade for earthwork operations including removal of vegetation, topsoil, debris, obstructions, and deleterious materials from ground surface is specified in Division 31 Section "Site Clearing."

C. Protect and maintain erosion and sedimentation controls, which are specified in Division 31 Section "Site Clearing." during earthwork operations.

3.2 EXCAVATION

A. Unclassified Excavation: Excavate to subgrade elevations regardless of the character of surface and subsurface conditions encountered. Unclassified excavated materials may include rock, soil materials, and obstructions. No changes in the Contract Sum or the Contract Time will be authorized for rock excavation or removal of obstructions.

1. If excavated materials intended for fill and backfill include unsatisfactory soil materials and rock, replace with satisfactory soil materials.

3.3 EXCAVATION FOR STRUCTURES

A. Excavate to indicated elevations and dimensions within a tolerance of plus or minus 1 inch. If applicable, extend excavations a sufficient distance from structures for placing and removing concrete formwork, for installing services and other construction, and for inspections.

1. Excavations for Footings and Foundations: Do not disturb bottom of excavation. Excavate by hand to final grade just before placing concrete reinforcement. Trim bottoms to required lines and grades to leave solid base to receive other work.

3.4 EXCAVATION FOR WALKS AND PAVEMENTS

A. Excavate surfaces under walks and pavements to indicated lines, cross sections, elevations, and subgrades.

3.5 EXCAVATION FOR UTILITY TRENCHES

A. Excavate trenches to indicated gradients, lines, depths, and elevations.

B. Excavate trenches to uniform widths to provide the following clearance on each side of pipe or conduit. Excavate trench walls vertically from trench bottom to 12 inches higher than top of pipe or conduit, unless otherwise indicated.

1. Clearance: 12 inches each side of pipe or conduit or as indicated.

C. Trench Bottoms: Excavate and shape trench bottoms to provide uniform bearing and support of pipes and conduit. Shape subgrade to provide continuous support for bells, joints, and barrels of pipes and for joints, fittings, and bodies of conduits. Remove projecting stones and sharp objects along trench subgrade.

1. Excavate trenches 6 inches deeper than elevation required in rock or other unyielding bearing material, 4 inches deeper elsewhere, to allow for bedding course.

3.6 SUBGRADE INSPECTION

A. Reconstruct subgrades damaged by freezing temperatures, frost, rain, accumulated water, or construction activities, as directed by Architect, without additional compensation.

3.7 UNAUTHORIZED EXCAVATION

A. Fill unauthorized excavation under foundations or wall footings by extending bottom elevation of concrete foundation or footing to excavation bottom, without altering top elevation. Lean concrete fill, with 28-day compressive strength of 2500 psi, may be used when approved by Architect.

1. Fill unauthorized excavations under other construction or utility pipe as directed by Architect.

3.8 STORAGE OF SOIL MATERIALS

A. Stockpile borrow soil materials and excavated satisfactory soil materials without intermixing. Place, grade, and shape stockpiles to drain surface water. Cover to prevent windblown dust.

1. Stockpile soil materials away from edge of excavations. Do not store within drip line of remaining trees.

3.9 UTILITY TRENCH BACKFILL

A. Place backfill on subgrades free of mud, frost, snow, or ice.

B. Place and compact bedding course on trench bottoms and where indicated. Shape bedding course to provide continuous support for bells, joints, and barrels of pipes and for joints, fittings, and bodies of conduits.

C. Backfill trenches excavated under footings and within 18 inches of bottom of footings with satisfactory soil; fill with concrete to elevation of bottom of footings. Concrete is specified in Division 03 Section "Cast-in-Place Concrete."

D. Place and compact initial backfill of satisfactory soil, free of particles larger than 1 inch in any dimension, to a height of 12 inches over the utility pipe or conduit.

1. Carefully compact initial backfill under pipe haunches and compact evenly up on both sides and along the full length of utility piping or conduit to avoid damage or displacement of piping or conduit. Coordinate backfilling with utilities testing.

E. Place and compact final backfill of satisfactory soil to final subgrade elevation.

3.10 SOIL FILL

A. Plow, scarify, bench, or break up sloped surfaces steeper than 1 vertical to 4 horizontal so fill material will bond with existing material.

B. Place and compact fill material in layers to required elevations as follows:

1. Under grass and planted areas, use satisfactory soil material.
2. Under walks and pavements, use satisfactory soil material.
3. Under steps and ramps, use engineered fill.
4. Under building slabs, use engineered fill.
5. Under footings and foundations, use engineered fill.

3.11 SOIL MOISTURE CONTROL

A. Uniformly moisten or aerate subgrade and each subsequent fill or backfill soil layer before compaction to within 2 percent of optimum moisture content.

1. Do not place backfill or fill soil material on surfaces that are muddy, frozen, or contain frost or ice.
2. Remove and replace, or scarify and air dry otherwise satisfactory soil material that exceeds optimum moisture content by 2 percent and is too wet to compact to specified dry unit weight.

3.12 COMPACTION OF SOIL BACKFILLS AND FILLS

A. Place backfill and fill soil materials in layers not more than 8 inches in loose depth for material compacted by heavy compaction equipment, and not more than 4 inches in loose depth for material compacted by hand-operated tampers.

B. Place backfill and fill soil materials evenly on all sides of structures to required elevations, and uniformly along the full length of each structure.

C. Compact soil materials to not less than the following percentages of maximum dry unit weight according to ASTM D 698:
   1. Under structures, scarify and recompact top 12 inches of existing subgrade and each layer of backfill or fill soil material at 98 percent.
   2. Under walkways, scarify and recompact top 6 inches below subgrade and compact each layer of backfill or fill soil material at 95 percent.
   3. Under lawn or unpaved areas, scarify top 6 inches below subgrade and compact each layer of backfill or fill soil material at 85 percent.
   4. Under planting beds, refer to Division 32 exterior plants section for compaction requirements.
   5. For utility trenches, compact each layer of initial and final backfill soil material at 85 percent.

3.13 GRADING

A. General: Uniformly grade areas to a smooth surface, free of irregular surface changes. Comply with compaction requirements and grade to cross sections, lines, and elevations indicated.

B. Site Grading: Slope grades to direct water away from buildings and to prevent ponding. Finish subgrades to required elevations within the following tolerances:

   1. Lawn or Unpaved Areas: Plus or minus 1 inch.
   2. Walks: Plus or minus 1/2 inch.
   3. Pavements: Plus or minus 1/2 inch.

3.14 SUBBASE AND BASE COURSES

A. Place base course on subgrades free of mud, frost, snow, or ice.

B. On prepared subgrade, place base course under pavements and walks as follows:
   1. Compact subbase and base course at optimum moisture content to required grades, lines, cross sections, and thickness to not less than 95 percent of maximum dry unit weight according to ASTM D 698.

3.15 DRAINAGE COURSE

A. Place drainage course on subgrades free of mud, frost, snow, or ice.

B. On prepared subgrade, place and compact drainage course under cast-in-place concrete slabs-on-grade as follows:

1. Place drainage course that exceeds 6 inches in compacted thickness in layers of equal thickness, with no compacted layer more than 6 inches thick or less than 3 inches thick.
2. Compact each layer of drainage course to required cross sections and thicknesses to not less than 95 percent of maximum dry unit weight according to ASTM D 698.

3.16 FIELD QUALITY CONTROL

A. Testing Agency: Owner will engage a qualified independent geotechnical engineering testing agency to perform field quality-control testing.

B. Allow testing agency to inspect and test subgrades and each fill or backfill layer. Proceed with subsequent earthwork only after test results for previously completed work comply with requirements.

C. Footing Subgrade: At footing subgrades, at least one test of each soil stratum will be performed to verify design bearing capacities. Subsequent verification and approval of other footing subgrades may be based on a visual comparison of subgrade with tested subgrade when approved by Architect.

D. Testing agency will test compaction of soils in place according to ASTM D 1556, ASTM D 2167, ASTM D 2922, and ASTM D 2937, as applicable.

E. When testing agency reports that subgrades, fills, or backfills have not achieved degree of compaction specified, scarify and moisten or aerate, or remove and replace soil to depth required; recompact and retest until specified compaction is obtained.

3.17 PROTECTION

A. Protecting Graded Areas: Protect newly graded areas from traffic, freezing, and erosion. Keep free of trash and debris.

B. Repair and reestablish grades to specified tolerances where completed or partially completed surfaces become eroded, rutted, settled, or where they lose compaction due to subsequent construction operations or weather conditions.

C. Where settling occurs before Project correction period elapses, remove finished surfacing, backfill with additional soil material, compact, and reconstruct surfacing.

1. Restore appearance, quality, and condition of finished surfacing to match adjacent work, and eliminate evidence of restoration to greatest extent possible.

3.18 DISPOSAL OF SURPLUS AND WASTE MATERIALS

A. Disposal: Remove surplus satisfactory soil and waste material, including unsatisfactory soil, trash, and debris, and legally dispose of it off Owner's property.

END OF SECTION 312000

SECTION 321816.13a - PLAYGROUND PROTECTIVE SURFACING – ENGINEERED WOOD FIBER

PART 1 - GENERAL

1.1 SUMMARY

A. This Section includes the following for the playground and fitness area surfacing:
   1. Organic loose-fill surface.

1.2 SUBMITTALS

A. Product Data: For each type of product indicated.

B. Product certificates.

C. Warranty.

1.3 QUALITY ASSURANCE

A. Installer Qualifications: An employer of workers trained and approved by manufacturer.

1.4 WARRANTY

A. Special Warranty: Manufacturer's standard form in which manufacturer agrees to repair or replace components of playground surface system that fail in materials or workmanship within specified warranty period.

   1. Failures include, but are not limited to, the following:

      a. Reduction in impact attenuation.
      b. Deterioration of surface and other materials beyond normal weathering.

   2. Warranty Period: Three years from date of Substantial Completion.

PART 2 - PRODUCTS

2.1 ENGINEERED WOOD FIBER (ORGANIC LOOSE-FILL SURFACE)

A. Engineered Wood Fibers: Random-sized wood fibers, in manufacturer's standard fiber size, approximately 10 times longer than wide; containing no bark, leaves, twigs, or foreign or toxic materials according to ASTM F 2075; graded according to manufacturer's standard specification for material consistency for playground surfaces and for accessibility according to ASTM F 1951.

1. Available Products:

    a. Fibar, Inc.; Fibar System 300.
    b. GameTime; GT Impax Fiber.
    c. New England Playground Surfacing; Playground Safety Fiber.
    d. Sof'Fall Incorporated; Sof'Fall.
    e. Zeager Bros., Inc.; Wood Carpet.
    f. Nature's Blanket; Homer Industries

2. Critical Height: 8 feet or as indicated by the manufacturer's shop drawings, whichever is more stringent.
3. Uncompressed Material Depth: Not less than as required for critical height indicated.

2.2 RELATED PRODUCTS

A. Drainage/Separation Geotextile: Nonwoven, needle-punched geotextile as indicated in Division 32 "Earth Moving"

B. Drainage Course: CA-7

PART 3 - EXECUTION

3.1 INSTALLATION

A. Prepare substrates to receive surfacing products according to playground surface system manufacturer's written instructions. Verify that substrates are sound and without high spots, ridges, holes, and depressions.

B. Pitch subgrade to drainage structure as indicated.

C. Loose-Fill Systems:

1. Loose-Fill Edgings: Playground curb as indicated on drawings.
2. Loose Fill: Place playground surface system materials including manufacturer's standard amount of excess material for compacting mechanically to required depths after Installation of playground equipment support posts and foundations.
3. Compacting and Grading: Uniformly compact and grade loose-fill according to manufacturer's written instructions to an even surface free from irregular surface changes as indicated.
4. Finish Grading: Hand rake to a smooth finished surface and to required elevations.

3.2 FIELD QUALITY CONTROL

A. Installed Surface Performance Test: ASTM F1292
1. Perform impact attenuation testing according to ASTM F1292 in presence of Owner's representative within 30 days of installation.

a. Confirm Impact Attenuation Performance:
    1) G-Max Score: Less than 150 g's
    2) Head Injury Criteria (HIC) Score: Less than 850

2. Test Equipment Operator Qualifications:
    a. National Recreation and Parks Association/National Playground Safety Institute (NRPA/NPSI) Certified Playground Safety Inspector (CPSI).
    b. Trained in the proper operation of Triax test equipment by competent agency.
3. Determine compliance with ASTM F 1292, unless otherwise specified in this section.
4. Remediate as needed to ensure compliance with required criteria.

END OF SECTION 321816.13

SECTION 321816.13b - PLAYGROUND PROTECTIVE SURFACING – POURED IN PLACE RUBBER

PART 1 GENERAL

1.1 DESCRIPTION

A. Playground Safety Surfacing System:
1. Resilient, poured-in-place, playground safety surfacing.

1.2 RELATED SECTIONS

A. Section 116800: Playground Equipment and Structures

B. Section 033000: Cast-in-Place Concrete

1.3 REFERENCES

A. ASTM C 67 – Standard Test Methods for Sampling and Testing Brick and Structural Clay Tile.

B. ASTM C 501 – Standard Test Method for Relative Resistance to Wear of Unglazed Ceramic Tile by the Taber Abraser.

C. ASTM D 395 – Standard Test Methods for Rubber Property--Compression Set.

D. ASTM D 412 – Standard Test Methods for Vulcanized Rubber and Thermoplastic Elastomers--Tension.

E. ASTM D 624 – Standard Test Method for Tear Strength of Conventional Vulcanized Rubber and Thermoplastic Elastomers.

F. ASTM D 2047 – Standard Test Method for Static Coefficient of Friction of Polish-Coated Floor Surfaces as Measured by the James Machine.

G. ASTM D 2859 – Standard Test Method for Ignition Characteristics of Finished Textile Floor Covering Materials.

H. ASTM E 303 – Standard Test Method for Measuring Surface Frictional Properties Using the British Pendulum Tester.

I. ASTM F 1292 – Standard Specification for Impact Attenuation of Surface Systems Under and Around Playground Equipment.

J. US Consumer Product Safety Commission (CPSC) Handbook for Playground Safety.

K. Comply with ASTM F1951 Standard Specification for determination of Accessibility of Surface Systems Under and around Playground Equipment

1.4 SUBMITTALS

A. Product Data: Submit manufacturer's product data, including installation instructions and subsurface instructions.

B. Samples: Required if other than the recommended manufacture.

1. Poured-in-Place Surfacing: Submit manufacturer's sample of poured-in-place playground safety surfacing showing texture, color, and thickness. Minimum 4” x 4”
2. Playground Safety Surfacing System: Submit manufacturer’s sample of playground safety surfacing system as installed in field, showing edge details and method of permanently fastening surfacing mats.

C. Test Reports: Submit certified test reports from qualified independent testing agency indicating results of the following tests for Poured in place:

1. Impact Attenuation: ASTM F 1292.

a. G-max score.
b. Head injury criteria (HIC) score.

2. Freeze Thaw: ASTM C 67.
3. IPEMA Certification
4. Slip Resistance: ASTM D 2047 and E 303.
5. Tensile Strength: ASTM D 412.
6. Elongation at Break: ASTM D 412.
7. Tear Strength: ASTM D 624.
8. Wear surface density (durability).
9. Taber Abrasion: ASTM C 501.
10. Flammability: ASTM D 2859

D. Certificate of Compliance: Submit manufacturer's certificate of compliance indicating materials comply with specified requirements.

E. Manufacturer's Project References:

1. Submit list of 10 successfully completed projects.
2. Include project name and location, contact and phone number, and type and quantity of playground safety surfacing tiles and poured-in-place playground safety surfacing furnished as a combined playground safety surfacing system.

F. Installer's Project References:

1. Submit list of 10 successfully completed projects.
2. Include project name and location, contact and phone number, and type and quantity of playground safety surfacing tiles and poured-in-place playground safety surfacing installed as a combined playground safety surfacing system.

G. Maintenance Instructions: Submit manufacturer's maintenance and cleaning instructions.

H. Warranty: Submit manufacturer's warranty to comply with Section 1.8 A below.

I. Submit installation depth plan. Manufacturer submittal shall clearly indicate PIP (poured in place) thickness and where the thickness change is located in relation to the play equipment and fall zones. The rubber thickness shall meet the required HIC and G max as indicated in this specification.

1.5 QUALITY ASSURANCE

A. Manufacturer's Qualifications:

1. Continuously engaged in manufacturing of poured-in-place playground safety surfacing of similar type to that specified, with a minimum of 10 years successful experience.
2. Furnished a minimum of 1,000,000 square feet of poured-in-place playground safety surfacing of similar type to that specified.

B. Installer's Qualifications:

1. Poured-in-Place Surfacing: Successful experience in installation of poured-in-place playground safety surfacing of similar type to that specified, with a minimum of 20 projects completed within last 5 years.
2. Employ persons trained for installation of playground safety surfacing system.
3. Approved by manufacturer.

1.6 DELIVERY, STORAGE, AND HANDLING

A. Delivery: Deliver materials to site in manufacturer's original, unopened containers and packaging, with labels clearly identifying product name and manufacturer.

B. Storage:

1. Store materials in accordance with manufacturer's instructions.
2. Store materials in a dry area at a minimum temperature of 50 degrees F (10 degrees C) for a minimum of 72 hours before installation.
3. Surfacing Adhesive: Store adhesive in a dry area at a minimum temperature of 50 degrees F (10 degrees C).

C. Handling: Protect materials during handling and installation to prevent damage or contamination.

1.7 ENVIRONMENTAL REQUIREMENTS

A. Poured-in-Place Surfacing:

1. Material Temperature: Ensure material temperature is a minimum of 50 degrees F (10 degrees C) at time of installation.
2. Air Temperature: Ensure air temperature is a minimum of 40 degrees F (4 degrees C) for a minimum of 24 hours before, during, and a minimum of 72 hours after installation.

1.8 WARRANTY

A. Poured-in-Place Surfacing:

1. Materials and Workmanship: Poured-in-place playground safety surfacing shall be warranted for defects in materials and workmanship for 5 years from date of completed installation.
2. Performance: Poured-in-place playground safety surfacing shall be warranted to meet impact attenuation performance requirements of ASTM F 1292 for 5 years from date of completed installation.

PART 2 PRODUCTS

2.1 POURED-IN-PLACE SURFACING

A. Poured-in-Place Surfacing:

1. Description: Dual-density, resilient, seamless, poured-in-place, playground safety surfacing.
2. Compliance: Meet or exceed CPSC guidelines for impact attenuation.
3. Material: SBR and EPDM rubber shreds and granules mixed with 100 percent solids, MDI polyurethane binding agent.
4. Base Course: Mixture of SBR shredded rubber and MDI polyurethane agent that is: Weather resistant, UV stabilized, flexible, nonhardening, 100 percent solids polyurethane complying with requirements of authorities having jurisdiction for nontoxic and low VOC content.

   a. Binder-to-Rubber Ratio: 14 percent. +/- 2% and within minimum required
   b. Compacted Density: 28 pcf. +/- 2% and within minimum required
   c. Thickness: Sufficient to meet impact attenuation requirements of less than 150 gmax and less than 850 HIC

5. Wear Course: Mixture of EPDM rubber granules and Aliphatic binding agent.

   a. Binder-to-Rubber Ratio: 18-25 percent.
   b. Compacted Density: 50-60 pcf.
   c. Thickness: 3/8 – 5/8 inch.

6. Total Thickness: As necessary to meet the impact attenuation requirements of this Section and ASTM F 1292, for each given Critical Fall Height less than 150 gmax and less than 850 HIC

7. Colors: Mix to be selected by Owner from manufacturers full color range.

   a. Granules on wear layer shall have full color through cross section.

   b. Color A: 50% black/50% green.

8. Acceptable Manufacturers:

   a. Surface America: Playbound Poured-in-Place

Contact: Kevin Driscoll at NuToys Leisure Products, (708) 579-9055

b. Perfect Turf – Mega Play 10
Contact: Ross Burns at Perfect Turf (888) 796-8873

c. ProTechs Surfacing, LLC
Contact: Lani Chaplik at Parkreation, Inc., (847) 363-3755

C. Test Results (In field – post installation):

1. Impact Attenuation, ASTM F 1292:

a. g-max Score: Less than 150.
b. Head Injury Criteria (HIC) Score: Less than 850.

2. Minimum Standard Coefficient of Friction, ASTM D 2047: dry 1.0 -.8 and wet .9 - .6
3. Tensile Strength, ASTM D 412: 60-80 psi
4. Tear Strength, ASTM D 624: 140 %
5. Flammability, Burning Pill, ASTM D 2859: Pass.

2.2 SOURCE QUALITY CONTROL

A. Tests: Independent testing agency to test playground safety surfacing system in accordance with ASTM F 1292.

1. Test shall include velocity indicator to confirm test was completed at proper height.

PART 3 EXECUTION

3.1 EXAMINATION

A. Examine areas to receive playground safety surfacing system. Notify Architect if areas are not acceptable. Do not begin installation until unacceptable conditions have been corrected.

3.2 PREPARATION – POURED-IN-PLACE SURFACING

A. Prepare subsurface in accordance with manufacturer's instructions to ensure proper support and drainage for poured-in-place playground safety surfacing.

B. Compacted, granular aggregate subsurface shall be as indicated in the drawings and per manufacturer’s recommendations.

C. Variations in Elevation: Repair variations in elevation of completed subsurface greater than plus or minus 1/4 inch over 10 feet in any direction.

3.3 INSTALLATION

A. Install playground safety surfacing system in accordance with manufacturer's instructions at locations indicated on the Drawings.

B. Protect adjacent walkways from surfacing and surfacing materials (glue / binder).

C. Poured-in-Place Surfacing:

1. Ensure prepared subsurface is dry and clean.
2. Install edges in accordance with manufacturer's instructions and as indicated on the Drawings.
3. Fasten poured-in-place surfacing to surfacing tiles in accordance with manufacturer's instructions.
4. Where color pattern is indicated, install cold seams between adjacent colored material. See Drawings.
5. Spread surface course evenly over primed base course to form a level layer of uniform density and consistency, applied at manufacturer's standard spreading rate in one continuous operation, and, except where color changes, with no cold seams. Seams or breaks in uniformly colored surfacing fields will not be accepted. Should a seam occur due to a uniformly colored surface area not being installed in a continuous operation, Contractor will be responsible for removing and reinstalling surface area at no cost to the Owner.

3.4 FIELD QUALITY CONTROL

A. In Field Post-Installation Safety Inspection:

1. Provide third-party inspection and testing of playground safety surfacing system within 30 days of installation. Contractor shall give the A/E and the owner 48 hours previous notice
2. Architect shall be on-site during play surface testing.
3. Conduct inspection by National Recreation and Parks Association/National Playground Safety Institute (NRPA/NPSI) Certified Playground Safety Inspector (CPSI).
4. Test shall be two "drops" per 1000 s.f. Test drops shall include drops on varying surface depths and on tiles and poured in place material.
5. Determine compliance with ASTM F 1292 unless otherwise specified in this section.
6. Provide written report of findings to Owner and Landscape Architect, with photographs.
7. If after installation inspection the surface does not meet specifications, Contractor shall replace at no additional cost to the Owner. Patches will not be accepted Contractor shall identify the limits of repair/replacement and solicit Architect's prior approval before proceeding.
8. Retest affected area and seams. Additional testing shall be completed at no cost to the Owner. Contractor shall replace poured in place surfacing tiles and re-test as necessary until G-max and HIC scores are achieved as indicated in this section.

3.6 CLEANING

A. Clean playground safety surfacing system in accordance with manufacturer's instructions.

3.7 PROTECTION

A. Protect completed playground safety surfacing system from damage during construction.

B. Poured-in-Place Surfacing: Do not allow foot traffic on poured-in-place surfacing until a minimum of 80 percent cure is obtained (6 to 48 hours depending on temperature and humidity).

C. Protect the work and adjacent work against damage during progress of the work. Contractor will be responsible for the protection of the playground surfacing until final acceptance of work and will replace any playground surfacing that is damaged or vandalized during construction.

B. LOOSE-FILL SYSTEMS:
1. Loose-Fill Edgings: Playground curb as indicated on drawings.
2. Retain one of two options in subparagraph below if manufacturer of specified loose-fill system calculates material quantity with an allowance for excess material. If design professional's experience is sufficient to enable making an accurate estimate for required excess material, insert requirement for excess material in Part 2 and revise below.
3. Loose Fill: Place playground surface system materials including manufacturer's standard amount of excess material for compacting mechanically to required depths after Installation of playground equipment support posts and foundations.
4. Compacting and Grading: Uniformly compact and grade loose-fill according to manufacturer's written instructions to an even surface free from irregular surface changes as indicated.
5. Finish Grading: Hand rake to a smooth finished surface and to required elevations.

END OF SECTION 321816.13

SECTION 321816.13c – PLAYGROUND PROTECTIVE SURFACING – ARTIFICIAL TURF

PART 1 – GENERAL

1.1 SUMMARY

A. This document provides the specifications for a Synthetic Grass Playground installation composed of a tufted polyethylene grass fiber component with a texturized polyethylene thatch zone with a sand in-fill installed over a porous aggregate stone base including drainage system.
There may be variations in the final specifications as required by the Client.

1.2 WORK INCLUDED

A. Provide all labor, materials, equipment, and tools necessary for the complete installation of a synthetic grass playground system as outlined in these specifications and an infill of sand. The vertical draining base shall be provided separately by an approved contractor.

B. Qualifications and Submittals

Prospective bidders and/or installers of the turf shall be required to comply with the following:

a. The turf manufacturer must warranty their product to meet the minimum acceptable specifications listed within this document.

b. Manufacturer must hold ISO 9001 (Quality) certification

c. The turf installer must provide competent workmen skilled in this specific type of synthetic grass installation. The designated supervisory personnel on the project must be competent in the installation of this material, including gluing seams and proper installation of the infill rubber.

d. The turf installer must install the aggregate base and the perimeter composite lumber tack strip.

PART 2 - SYNTHETIC GRASS MATERIALS

2.0 Acceptable Manufacturers

A. Perfect Play – Playground Turf 80. Manufacturer: Perfect Turf, LLC – 847.340.7519 or 888-796-8873 www.PerfectTurfInc.com
B. XGrass Synthetic Turf for Play Areas–877.881.8477 supplied locally by Custom Playgrounds Inc 815.708.8540C.
C. EasyTurf Play-Safe System, 888.275.7683 as supplied by EasyTurf, a Field Turf Company.

2.1 The synthetic turf material and resilient infill shall be in accordance with the following:

A. The fiber shall be a minimum 12,000 denier, minimum 150 micron thickness 100% true monofilament polyethylene, low friction fiber, measuring not less than 1-5/8 inches high and not more than 1-3/4 inches high. The low friction fiber shall be specifically designed to virtually eliminate abrasion.

B. The fiber shall be a two-tone grass blade, green in color with a tan thatch fiber to simulate natural grass as closely as possible and treated with UV inhibitor, guaranteed a minimum of eight years.

C. The tufted fiber weight shall not be less than 80 ounces per square yard. The fiber shall be tufted on a 3/8" tufting machine. The low friction non-abrasive fiber shall be 100% monofilament polyethylene, treated with a UV inhibitor.

D. The primary backing shall consist of a one part, two-component primary backing. The secondary backing shall consist of an application of a minimum of 20 ounces of Polyurethane coating per square yard heat activated to permanently lock fiber tufts in place. The total backing weight shall not be less than 26 ounces. The synthetic grass system shall be perforated to provide for maximum drainage. Non-perforated systems shall not be acceptable alternates for purposes of this specification.

E. The carpet rolls shall be of sufficient length to go from side to side of the play area. Full head seams will not be acceptable unless as required to cut around equipment posts.

F. The shock attenuation pad shall be sufficient to meet the impact attenuation requirements of ASTM F 1292, for each critical fall height less than 150 gmax and less than 850 HIC. Equipment fall heights can be found in Section 116800 Play Field Equip & Structures.

G. The infill shall be T-Cool sand.

PART 3 – BASE AND DRAINAGE

3.1 Base Material

A. The vertical draining base will consist of Vulcan 210 Open Graded Stone (OGS) installed upon a geo-textile membrane.

B. The Synthetic Turf System supplier will inspect the aggregate base prior to the installation of the Synthetic Turf System.

PART 4 – EXECUTION AND INSTALLATION

4.1 The turf installer shall strictly adhere to the installation procedures outlined under these sections. Any variance from these requirements shall be accepted in writing by the manufacturer's onsite representative, and submitted to the architect/owner, verifying that the changes do not in any way affect the warranty.

A. The turf installer will accept the aggregate base prior to the installation of the synthetic turf system. The compaction of the aggregate base shall be minimum 90% and the surface tolerance shall not exceed 1/8 inch in ten feet.

B. Extreme care should be taken to avoid disturbing the substrate in regard to planarity.

C. Playground pad shall be laid out and cut around the playground equipment so as not to leave large gaps.

D. The full width rolls of synthetic grass shall be laid out across the area and utilizing standard state-of-the-art gluing procedures each roll shall be seamed to the next.

E. This is a 100% glued installation. Sewing of seams will not be permitted. The seaming tape and glue shall be intended for installation of outdoor synthetic turf surfaces.

F. The synthetic turf will be fastened to perimeter nail boards with wood screws at a maximum of 4” on center.

G. The play area shall, be infilled with 1-2 pounds of T-Cool sand / square foot and brushed with a motorized rotary nylon broom to stand up the fibers and allow the sand to settle to the bottom of the turf upon completion of the installation.

PART 5 –MAINTENANCE AND WARRANTY

5.1 The bidder and/or the turf manufacturer must provide the following:

A. The turf manufacturer shall provide a warranty to the owner that covers defects in materials and workmanship of the turf for a period of eight years from the date of Substantial Completion. An eight (8) year "UV stabilization" warranty shall be included in the warranty.

B. The manufacturer’s warranty shall include general wear and damage caused from UV degradation. The warranty shall specifically exclude vandalism, acts of War and acts of God beyond the control of the owner or the manufacturer.

C. The bidder shall provide a warranty to the owner that covers defects in the installation workmanship, and further warrant the installation was done in accordance with the manufacturer’s recommendations for a period of one (1) year.

D. All turf warranties shall be limited to repair or replacement of the affected areas and shall include all necessary materials, labor, transportation costs, etc. to complete said repairs. All warranties are contingent on the full payment by the owner of all pertinent invoices.

E. Tests: Independent testing agency to test playground safety surfacing system in accordance with ASTM F 1292, and furnish test results to owner.

END OF SECTION 321816.13

321816-13 d - Product Specification: **AquaFlex® (Porous)**

Surface America, Inc. • PO Box 157 • Williamsville, NY 14231
Phone: (800) 999-0555 • Phone: (716) 632-8413 • Fax: (716) 632-8324
info@surfaceamerica.com • www.surfaceamerica.com

Note: AquaFlex® is a Landscape Structures Inc. product provided by Surface America.

1. GENERAL

1.1 *Scope*: These are the manufacturer's specifications for the AquaFlex Porous Surfacing System.

1.2 *Description:* AquaFlex Porous is a porous thermoplastic aliphatic rubber (installed at 3/8" thickness) designed to be used in the surfacing of water play applications that come in contact with chlorine. It will bond to most surfaces and will flex with surface movements. It has been designed to be light-stable and will stand up to weather and chlorine.

1.3 *Work:* Provide all necessary materials, labor, tools and equipment to perform the work included in the section for the installation of the resurface.

1.4 The installation of the new surface shall be completed by Surface America certified installers. Manufacturer's detailed installation procedures shall be submitted to the architect and made part of the bid specifications.

1.5 Temperature must remain above 50-degrees Fahrenheit throughout the installation and curing process. Weather and surface must be dry, and there should be no rain in the immediate forecast.

1.6 Site must be made secure against vandalism during installation and curing period.

2. SUBMITTALS

2.1 Manufacturer's product literature and specification data.

2.2 ASTM C 1028-07 Skid Resistance Test.

2.3 Manufacturer's written instructions for recommended maintenance practices.

2.4 Color samples for customer verification.

2.5 Written statement on Manufacturer's letterhead certifying that the top surface will be light stable for a period of three (3) years from date of installation.

2.6 Written manufacturer's warranty for water play.

2.7 Product liability insurance certificate with project owner as certificate holder.

2.8 MSDS and Product Data Sheets for items in Section 3 "Products."

3. PRODUCTS

3.1 *Product:* AquaFlex Porous Surfacing Systems.

3.2 *Materials:* AquaFlex aliphatic, 100% solids, two-component, chlorine-resistant polyurethane Binder/Primer; AquaFlex aliphatic thermoplastic large pebbles.

3.3 *Equal Materials:* The AquaFlex pebbles are a thermoplastic aliphatic polyurethane. The system is 100% color. The AquaFlex Binder/Primer is a two-part aliphatic chlorine resistant polyurethane. Any equal product granule or pebble must be aliphatic polyurethane based; not rubber based such as EPDM, TPV, or polyolefin-based TPE; must include an aliphatic polyurethane binder proven to be chlorine resistant and must be 100% color. Recycled black material is not acceptable. Where applicable, systems should be approved by the local board of health.

3.4 *Finish Texture:* Pebble grain.

3.5 *Color:* Selected from Manufacturer's color chart by owner prior to bid.

4. SURFACE PREPARATION

4.1 *New or Existing Concrete:* New concrete must be at least 28 days old. All concrete must be acid etched. Slowly add acid to water in clean polyethylene buckets at a ratio of eight parts water to one part acid. Care should be taken to prevent splashing on workers. Protective clothes such as safety glasses, rubber gloves and boots, should be used. The acid solution should be applied to the surface at a rate of 100 square feet per 5 gallons of acid solution. Using a stiff broom, scrub acid solution onto the surface. Never let the surface dry with acid on it. After 5 minutes, rinse the surface with large amounts of clean water to remove all the acid solution, and then allow the surface to dry. Old concrete that is contaminated with grease or oil can be cleaned with a power-washer. Use a degreasing agent before power-washing. For concrete where a power-washer cannot be used, a diamond grinder can be used to lightly grind the surface to remove contamination.

4.2 *Metal Preparation:* All metal surfaces must be rigid and structurally sound. Contamination such as grease, oil and dirt must be removed prior to coating. Rust or scale should be removed through mechanical means such as sanding or sandblasting. The surface should be abraded until bright metal is showing. If the surface will be exposed for an extended period of time, it should be treated with a 10% phosphoric acid solution to prevent new rust formation.

4.3 *Tile Preparation:* Unstable or loose tiles must be removed. Contamination should be removed with a power-washer or mechanically abraded. Any glazing on tile must be abraded with a grinder or shot blaster.

4.4 *Fiberglass Preparation:* Power-wash any contaminants off the surface. Allow 24 hours for the surface to dry. Glaze coating must be abraded or sanded. Solvent-wipe the fiberglass surface before coating with primer.

4.5 *Asphalt Preparation:* New asphalt must be 15 days old. Broom scrub using a degreaser to remove any surface oils. Power-wash any contaminants off the surface. Allow 24 hours for the surface to dry. AQUAFLEX CANNOT BE INSTALLED OVER ASPHALT CURED FOR LESS THAN 15 DAYS.

4.6 *Curb Preparation:* Cut a 3/8" x 1" keyway groove into the existing surrounding curbing. Groove shall be swept clean and be free of all residue.

4.7 *Drains, Ground Pop Jets, Doorways/Entryways:* Cut a 3/8" x 1 " keyway groove into the concrete surrounding the object. Groove shall be swept clean and be free of all residue.

5. INSTALLATION

5.1 *Forming:* If forming is required following the shape of the area to be surfaced, form out the area with 1" x 4" wood strips, or for curved concrete, use plywood cut into 4" strips. Stabilize the wood with spikes or stakes and thoroughly wax the wood surfaces with carnauba wax.

5.2 *Priming:* Roll or brush AquaFlex aliphatic, two-component polyurethane Binder/Primer onto the surface being sure to liberally cover the entire area. Mix an amount of primer that will be used in less than 30 minutes. Normally this would be approximately one gallon when the temperature is up to 85-degrees Fahrenheit. If it is warmer, the primer will cure faster and less material should be mixed. Only prime 200 square feet at a time, and as the installers approach an unprimed area, prime 200 additional square feet.

5.3 *AquaFlex Mixing and Finishing:* Dry-mix two 50-pound bags (100 pounds total) of AquaFlex pebbles in a mortar mixer. Pre-mix 9 pints of AquaFlex aliphatic, two-component, chlorine-resistant polyurethane Binder/Primer in an appropriate plastic container with a paddle mixer. Use caution when mixing not to spray, aerosolize or heat the HC B component of the binder system. Add the premixed 9 pints of binder to the pebbles in the mortar mixer. Mix thoroughly so that each pebble is covered evenly. Dump the mix onto the primed area and spread it with a cam rake, screed bars or screed box (1/2" setting) to an average thickness of 3/8", keeping the surface as level as possible. Hand or power-trowel using a solution of soapy water to spray the surface of the trowel. This will allow easier manipulation of the trowel as well as aid in the curing of the polyurethane. Let the surface set for 48 to 72 hours or until dry to the touch before using.

6. CLEANING

6.1 The contractor should clean the job site of excess materials.

6.2. The contractor shall instruct the owner’s personnel on proper maintenance and repair of the AquaFlex Surface.

7. SPECIAL CONSIDERATIONS

7.1 Coated Concrete—For a coated concrete surface, diamond grind or power-scarify as required to obtain optimum bond of the AquaFlex material to the concrete. Remove sufficient coated material to provide a sound surface, free of glaze, efflorescence, or from release agents. Remove grease, oil and other penetrating contaminants. Remove and/or replace any loose or unstable concrete. Concrete will have a pitch of 0.25 inches per foot and should not have low areas that will hold water under the system.

7.2 Existing Caulk-filled Edges—Prepare edges of existing pad to meet surrounding concrete. Remove any and all silicone or caulking where the pad and the surrounding concrete meet.

7.3 Existing Ground Features—Prepare the ground features submerged into the existing pad by cutting a 45-degree angle, 1/2" deep keyway. Remove all concrete adhered to the existing sides of the ground feature. Solvent-wipe the ground features to remove any contaminants.

7.4 Existing Drains—Prepare the drains submerged into the existing pad by cutting a 45-degree angle, 1/2" deep keyway. Remove all concrete adhered to the existing sides of the drains. Solvent-wipe the drains to remove any contaminants. Drill-weep holes at a 45-degree angle into the sides of the drains.

Warranty

Limited AquaFlex Warranty: AquaFlex offers a 3-year limited warranty on manufacturing defects.

Maintenance

As with any surface exposed to high traffic, regular cleaning helps to maintain a vibrant and attractive surface. AquaFlex is not only highly resistant to ultraviolet rays and chemicals, but it also stands up to 2,800 psi power-washing, and/or high–temperature (up to 180-degrees Fahrenheit maximum) pressure-washing.

The following cleaning agents should not be used on your AquaFlex surface: gasoline, diesel fuel, naphtha, benzene, acids, turpentine, mineral spirits, carbon tetrachloride, WD-40 and all other petroleum distillates.

SECTION 321823 - ATHLETIC SURFACING

PART 1 - GENERAL

1.01 SUMMARY

A. This Section includes the following:

1. Clay infield mix
2. Clay bricks

B. Related Sections

1. Division 31 Section “Earth Moving”

1.02 QUALITY ASSURANCE

A. Contractor’s qualifications for athletic field fine grading: Minimum 5 years’ experience successfully installing and grading athletic fields. Provide a minimum of 3 references for comparable work if requested.

B. Comply with applicable state, federal and local regulations.

C. Comply with the following standards:

1. National Federation of State High School Associations (NFHS)
2. Illinois Department of Transportation “Design Manual”.
3. American Society for Testing and Materials, (ASTM).
4. American Association of State Highway and Transportation Officials, (AASHTO).
5. OSHA.

1.03 SUBMITTALS

A. Clay infield mix
1. 1 qt. sample and test results

B. Clay bricks
1. Provide manufacturer’s data and testing
2. Provide 1 brick

1.04 PROJECT CONDITIONS

A. Known underground and surface utility lines are indicated on the drawings.

B. Protect existing lawns, and other features designated to remain as part of the work.

C. Promptly repair and pay for damage to adjacent facilities caused by fine grading operations.

PART 2 - PRODUCTS

2.01 MIXES

A. General: Clay infield mix shall be clean, stone free, clay / sand mixture

B. Approved Vendors:
   1. Waupaca Sand and Solutions, (715) 258-8566
      a. Sure-Hop Classic Infield Mix
   2. SportsFields Inc., (708) 371-0917
      a. Baseball Infield Mix

C. Clay Bricks: Durabrick as supplied by Sportsfields, Inc. (708) 371-0917 or approved equal.

PART 3 - EXECUTION

3.01 PREPARATION

A. Establish extent of fine grading by area and elevation. Designate and identify datum elevation and project engineering reference points. Set required lines, levels, and elevations.

3.02 EXISTING UTILITIES

A. Exercise care to protect utilities during fine grading operations including under drain system and irrigation system.

3.03 INFIELD MIX INSTALLATION

A. Mix Clay and Sand in proportions specified with mechanically driven rotary mixer.

B. Spread Mixture on skinned area to a minimum thickness of 4 inches. Do not allow mixture to segregate.

C. Moisten and compact to 90 percent of maximum density.

D. Reapply mixture as required to fill all pockets and depressions. Moisten and compact as specified.

3.04 FINE GRADING

A. Fine grade topsoil and infield mix following placement of Calcined Clay soil amendment within the field area and 15’ perimeter of the field by eliminating rough and low areas to ensure positive drainage. Maintain levels, profiles, contours and tolerances to plus or minus 1/2” of proposed grades in infield areas and plus or minus 1”of proposed grade in athletic field turf areas

3.05 MAINTENANCE

A. Protect finish graded areas from traffic and erosion. Keep free of trash, debris, and weeds. Repair and re-establish grades in settled, eroded, and damaged areas.

B. Where completed areas are disturbed by construction operations or adverse weather, scarify, re-shape, and compact to required density.

3.06 CLEANING

A. Upon completion of fine grading operations, clean areas within contract limits, remove tools, and equipment. Provide site clear, clean, free of debris, and suitable for site work operations.

END OF SECTION 321823

HydroLogix® Design Guide

Product Overview:

- Ideal water pressure for this system is 30-40 psi, which will deliver 60 GPM.
- Unit total output maximum of 60 GPM.
- This unit will have (6) 1" discharges that have gate valves for balancing flows to water events.
- Each discharge line has a maximum output of 15 GPM.
- Minimum 2" Supply line required for a single unit and a minimum 3" Supply line required for a dual unit system.
- Requires a 4" drain line.
- Activation duration to be adjustable up to 90 seconds.
- Larger features will need to fill up and will take multiple button presses.



HydroLogix® video presentation:

https://library.playlsi.com/l/62ec622369538ef/

**Underground plumbing packages shown in AquaSmart® install video do not apply if designing for a standard HydroLogix® splash pad.*

Design Guidelines:

- All single 1" line spray features to be under 15 GPM.
- All spray features to use 1" line size only.
- Some features may be paired together on one discharge line (See next pages).
  - Paired features cannot exceed 15 GPM combined.
  - Paired features need to be the same or very similar in size and function.
  - Paired features need equal line sizes and GPMs.
  - Paired features need to be equal distances from HydroLogix® unit and be tee'd off.
- Features over 15 GPM need multiple, combined lines (See next pages).
- All ground sprays to use stainless steel nozzle sockets.
- HydroLogix® unit needs to be centered or close to center of the splash pad for ADA accessibility and proper water drainage for health codes.
- HydroLogix® unit may be used as just an activation bollard by replacing the grates with solid covers and the addition of a seperate drain to waste.
- When using multiple HydroLogix® units, each unit requires its own tap back to the main.

Example design layout showing the six 1" feed lines from the HydroLogix® unit to features. This example also shows paired features on tee'd lines.

Note—Pre-enginered plumbing not included on HydroLogix® systems. Plumbing to be provided by others.

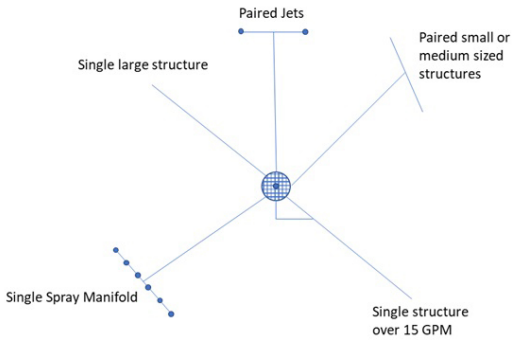

©2026

aquatix by landscape structures

HydroLogix® Design Guide

Approved Features:

Aqua Slides:	Product Line Size:	GPM:
• Nautilus1	1"	10
Interactive Splash Play:	**Product Line Size:**	**GPM:**
• Aim N Spray Bobber*	1"	5
• Aim N Spray Pirate*	1"	5
• Aim N Spray Sports Balls*	1"	5
• AquaGather Station	1"	10
• AquaLogs	1"	10
• Bobby the Bear*	1"	5
• FloraSwirl*	1"	3-5
• HydroSphere*	1"	5
• JetStream*	1"	5
• RocketStream*	1"	5
• Rotating Water Ball	1"	15
• Rotating Water Ball (Sport)	1"	15
• Snake Water Noodle*	1"	5-10
• SprayStacker	1"	15
• SprayVine*	1"	5-10
• SprayVine with Acrylic*	1"	5-10
• Timmy the Tiger*	1"	10-15
• Tot Rotating Water Ball*	1"	5
• Twist N Spray*	1"	5
• Water Cannon*	1"	5
• Water Fire Nozzle	1"	10-15
• WhirlPad*	1"	6
Splash Buckets:	**Product Line Size:**	**GPM:**
• BucketDuo	(2) 1"	15
• BucketDuo with Acrylic	(2) 1"	15
• BucketTrio	(2) 1"	15
• BucketTrio with Acrylic	(2) 1"	15
• Canopy Bucket	1"	7
• Canopy Bucket with Acrylic	1"	7
• CanopyDuo	(2) 1"	15
• CanopyDuo with Acrylic	(2) 1"	15
• Mini FlashFlood	1"	10

Aqua Domes:	Product Line Size:	GPM:
• Acrylic Tot Shower Dome*	1"	5-10
• Shower Water Dome	(2) 1"	25
• Tot Mushroom Dome*	1"	5-10
Aqua Posts:	**Product Line Size:**	**GPM:**
• AquaArc*	1"	5, 10
• AquaArc with Acrylic*“	1"	5, 10
• AquaBud	1"	10
• AquaBud with Acrylic	1"	10
• AquaFlier*	1"	5-10
• Bat and Ball Shower	1"	6
• BloomBurst Rise	1"	10
• BloomBurst Set	1"	10
• DragonFlier*	1"	5-10
• FloraSpout*	1"	2-3
• LeafCrown	1"	10-15
• SplashArc*	1"	5
• SplashArc with Acrylic*	1"	5
• Sport Water Shower*	1"	5-15
• Tot WellSpring*	1"	5-10
• Tot WellSpring with Acrylic*	1"	5-10
• UniFlow	1"	5-15
• VaporArc*	1"	5-10
• VaporArc with Acrylic*	1"	5-10
• Water Post	1"	10-15
• Water Shower*	1"	5, 10
• Water Spout*	1"	5, 10
• Water Tent	(2) 1"	35
• Water Wheel	(2) 1"	10-20
• WellSpring	1"	15
• WellSpring with Acrylic	1"	15

*Denotes feature can be paired; not to exceed 15 GPM combined

^Denotes need to be a blow-out system

Structures with a line size over 1" are to be plumbed to the HydroLogix® unit and reduced to 1".

Required plumbing for multiple supply lines to be by others

aquatix by landscape structures

©2026

HydroLogix® Design Guide

Approved Features:

Aqua Arches:	Product Line Size:	GPM:
• AquaHedra®	(2) 1"	15
• RippleRun Single Arches	1"	10
• Tot Arch	1"	10
• Tot Arch Bar	1"	10
• WaterWay	1"	10-15
• WhirlFlex^	(2) 1"	30
• WhirlFlex Single Rungs*^	1"	1.5, 2, 2.5

Aqua Forms:	Product Line Size:	GPM:
• AquaBarrel Half	1"	10
• AquaRock Small	1"	10
• AquaRock Large	1"	10
• GeoMisters*	1"	2, 4
• SandDollar Dome*	1"	1, 5, 10
• SeaCannon	1"	7
• SeaDome*	1"	7
• SeaPier	1 ½"	7.5, 15
• SeaPier with Pelican	1 ½"	7.5, 15
• SeaTreasure*	1"	3
• SplashPack Bear	1"	10
• SplashPack Dolphin	1"	10
• SplashPack Elephant	1"	15
• SplashPack Fish	1"	7
• SplashPack Frog	1"	10-15
• SplashPack Hippo-Swimming	1"	10-15
• SplashPack Lion	1"	15
• SplashPack Lizzard	1"	10
• SplashPack Octopus	1"	12
• SplashPack Seal	1"	15
• SplashPack Turtle	1"	15
• Spraying Puck	1"	7
• Spraying Sport Sphere	1"	10-15
• Spraying Sport Football	1"	6
• StarMister Solid* & Spotted*	1"	6-12
• Stone Boulder*	1 ½"	5-10
• TotPack Animals*	1"	5-10

Ground Sprays-Individual:	Product Line Size:	GPM:
• Arch Jet*	1"	1, 5, 10
• Bubbler	1"	10
• Crown Jet*	1"	5
• Funnel Twist*	1"	5
• Ground Funnel	1"	10
• Junior Water Jewel*	1"	7
• Mini Pillar	1"	10
• Rooster Spray*	1"	7
• Sea Crawler*	1"	5
• Side Wall Stream	1"	1, 5, 10
• Stream Jet*	1"	1, 5, 10
• Tot Ground Spray Covers*	1"	5
• Triple Arch Jet*	1"	3
• Triple Mist*	1"	3

Ground Sprays-Linked	Product Line Size:	GPM:
• Arch Jet Manifold*	1"	6
• Center Pillar Ring	1"	13
• Curvy Jet Manifold	1"	8
• Curvy Jewel Manifold	1"	14
• Mini Outward Spray Ring	1"	12
• Mini Upward Spray Ring	1"	12
• Stream Jet Manifold*	1"	7
• Stream Jet Triangle*	1", 1 ½"	3, 15

*Denotes feature can be paired; not to exceed 15 GPM combined
^Denotes need to be a blow-out system
Structures with a line size over 1" are to be plumbed to the HydroLogix® unit and reduced to 1".
Required plumbing for multiple supply lines to be by others

PRE-BID MEETING AGENDA

Date: November 5, 2026
Time: 10:00 AM
Location: Virtual
Attendees: Corey Wierema, City of Lake Forest (CLF)
Interested Bidders
Lacey Lawrence, RVi Planning + Landscape Architecture (RVi)

RVi Project #: 26000793
Project Name: South Park Phase Two

Purpose of Meeting: Pre-Bid Meeting

A. Project Team

1. Client: City of Lake Forest
2. Landscape Architect: RVi Planning + Landscape Architecture
3. Civil Engineer: Hey and Associates, Inc.
4. Electrical Engineer: Nova Engineering, PC

B. Bidding Timeline

1. Drawings Available from:
   Accurate Reproductions
   2368 Corporate Lane, Suite 100
   Naperville, Illinois 60540
   (630) 428-4433
   www.rviplanroom.com
2. Fee for drawings
   i. Digital download: No Cost
   ii. Physical copies: Cost of reproduction / Non-refundable
3. Cut off for questions: November 9, 2026, 5:00 PM
4. Bid due:
   i. November 18, 2026
   ii. Lake Forest Municipal Services
   iii. 800 N. Field Drive
   Lake Forest, Illinois 60045
5. Type of bids accepted: General contractor lump sum
6. Notification of award: December 7, 2026
7. See specification Section 000405 Bid Submittal Checklist for complete list of required documents, bidders shall submit one original and one copy of each

C. Critical Work Sequence

1. Start of Construction: March 1, 2027, weather and permit dependent
2. Final Completion Deadline: September 3, 2027
3. Punchlist: minimum two weeks prior to substantial completion
4. Any other unusual dates, deadlines, or milestones

D. Scope of Work

1. Work shall consist of the following:
    - i. Ballfield
        1. Shifting field north 15ft approx.
        2. Dugout structures
            a. Pending structural engineering of footings by Manufacturer
        3. Chain link fencing with netting
        4. Backstop with netted hood
        5. Regrading infield – new bases
    - ii. Batting Cage
        1. Artificial turf surfacing
        2. Concrete curb
    - iii. Picnic Shelter
        1. Pending structural engineering of footings by Manufacturer
    - iv. Bag Toss Boards
    - v. Drinking Fountain
    - vi. Splash Pad
        1. Concrete paving with welded wire fabric
        2. Aquaflex rubber surfacing
        3. Pending structural engineering of footings by Manufacturer
        4. Limestone boulders with flagstone paving connection to existing playground
    - vii. Hammock Grove
        1. Poured in place rubber surfacing
        2. Concrete curb
    - viii. Fitness Equipment
        1. Concrete paving - pedestrian
    - ix. Parking Lot
        1. Asphalt paving – vehicular
        2. Concrete curb and gutter
        3. ADA parking sign
        4. Crosswalk striping
    - x. Walking path and bike path connections
    - xi. Woodland Trail
        1. Contractor to stake pathway for Owner approval
        2. Clearing and grubbing, no root pruning large, mature trees
        3. Engineered wood fiber surfacing
    - xii. Landscape planting
    - xiii. Native/Woodland seeding and plugs
    - xiv. Turf grass seeding
    - xv. Site Furnishings (By Owner)

2. Alternates
    - i. Haul off excess soil material in lieu of berms (Info in upcoming Addendum)
        1. Provide credit for earthwork, seeding and blanket

3. Work Provided by Owner

PI	Picnic Shelter
PI	Dugout Structures
PI	Splash Pad Equipment
PI	Hammocks
PI	Bag Toss Boards
PI	Drinking Fountain
PI	Fitness Equipment
PI	Batting Cage Posts and Nets
G	Grill
O	Bike Racks and repair station
O	Game Tables
O	Interpretive Signs
O	Benches
O	Bleachers
O	Player Benches

P	Bases, Home Plate, Pitcher's Plate

4. Key

G	Contractor salvage and reinstall
O	Owner purchase and install
P	Contractor Purchase and Install
PI	Owner purchase and Contractor install

5. Testing Service Coordination
    i. Contractor coordinated, Owner contracted (Rubino)
6. Utility Coordination
    i. Prior to the start of construction, Contractor shall determine the locations of all existing water, gas, sewer, electric, telephone, fiber, irrigation, and other underground utilities and structures
7. Contractor to install SESC temporary measures and maintain throughout the construction duration

E. Examination of the site, drawings and specifications

1. Each Bidder shall thoroughly examine and be familiar with the specifications and drawings provided. Each Bidder shall also visit the site(s) of any proposed Work to acquaint the Bidder with conditions as they exist so that the Bidder may fully understand the facilities, difficulties, and restrictions attending the execution of the Contract.
2. The failure or omission of any Bidder to do the above shall in no way relieve the Bidder from any obligation with respect to their bid. By submitting a bid, the Bidder agrees and warrants that the Bidder has done the above, and where the specifications and drawings require in any part of the Work that a given result be produced, that the specifications and drawing are adequate and the required result can be produced under the specifications and drawings. No claim for additional compensation will be considered or paid to any Contractor due to Bidder's failure to examine the site.

F. Permit Status

1. Local Contractor Permits: All Contractors are required to be registered with the City of Lake Forest and secure all necessary permits
2. City of Lake Forest Development Permit: in progress
3. Lake County Stormwater Management Commission (LCSMC): in progress
4. IEPA: NPDES Permit: in progress
5. A State listed T&E species is located within the woodland, requires orange construction fence protection during construction, no staging or stockpiling in the woodland area.
    i. Trail realignment around protected species (info in upcoming Addendum)

G. Use of Premises

1. Access
    i. Maywood Road and Highview Terrace
    ii. No Contractor in the parking lot at the playground
2. Owner's requirements
    i. Full Owner occupancy: Owner will occupy site during entire construction period.

H. Work Restrictions

1. Work Hours:
    i. Confirm with City ordinance
    ii. Monday through Friday: 7:00am – 7:00pm
    iii. Saturday and Sunday: 8:00am – 6:00pm
    iv. Any work on weekends requires a written request and approval from the Owner a minimum of 7 days prior to any anticipated weekend work

I. Security procedures

1. Contractor is responsible for protecting against, not preventing, vandalism until final acceptance
2. Maintenance of traffic control devices by contractor
3. Owner to notify local Police Department of construction project

J. Questions

cc: Plan Holders

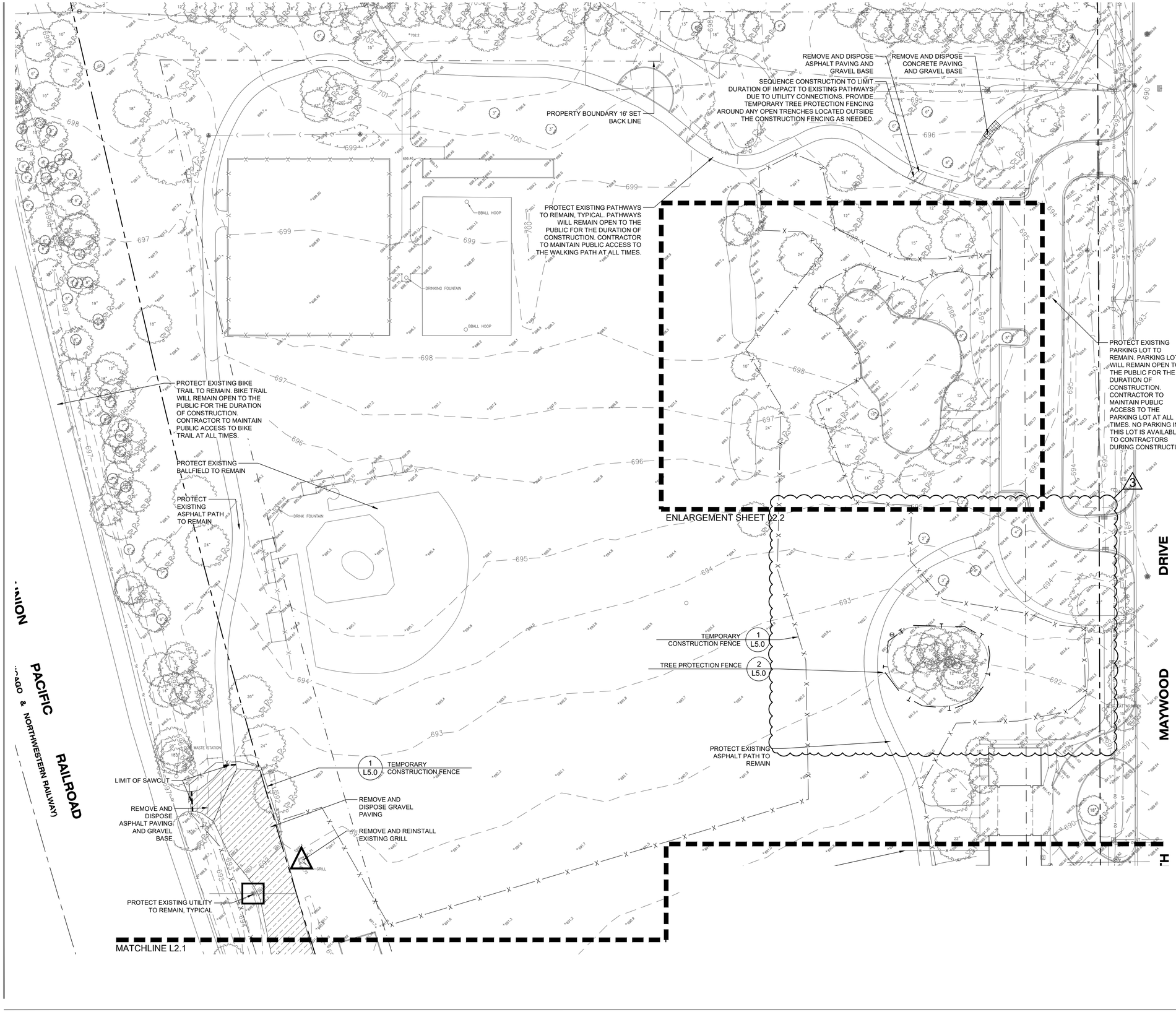

SITE PREPARATION AND REMOVALS NOTES

1. Contractor shall install construction fence at the limits of construction prior to beginning work. Maintain and adjust construction fencing as needed during progress of construction. Staging and construction access shall be approved by Owner.
2. Contractor shall install tree protection fencing as shown on the plans prior to beginning work. Maintain and adjust tree protection fencing as needed during progress of construction. Storage of materials, vehicular access, and all other construction activities are strictly prohibited within the limits of the tree protection fencing.
3. Plans indicate general location and limits of removals. Contractor shall perform removals only as necessary for construction of proposed improvements. No additional payments will be made for removals or restoration not required to construct the improvements as drawn and specified. Refer to Layout Plan for more specific information regarding proposed improvements and verify conditions in the field prior to performing removals.
4. Sawcut and remove concrete paving to nearest joint where indicated. All saw cuts required for removal items to be included in the unit cost of that particular pay item.
5. Tree stumps shall be ground to a minimum depth of 18" below existing grade or as required to properly perform the work.
6. Remove and dispose of turf where planting beds are designated. Refer to Planting Plan for limits of proposed landscape improvements.
7. Where turf or plantings are proposed in existing paved areas, remove all base material.
8. Remove all utilities designated for removal to extent required for improvements, unless otherwise noted. Cap ends of any remaining underground conduit and piping, and pull all electrical wire out at source.
9. Items indicated for Removal shall include complete removal of above grade item and below grade appurtances (foundations, urban fill, wiring, piping, etc.) including disposal off-site following applicable codes and ordinances, unless otherwise shown on the plans.
10. Items indicated as Remove and Salvage shall include careful protection, removal, and storage of items. For reinstall items, Contractor shall store during construction. All other Salvage items shall be delivered to location as indicated by owner unless otherwise shown on the plans.
11. Contractor to protect all existing utilities and all other site features not designated for removal. Contractor is responsible for replacing/repairing any existing utilities or other site features damaged during construction to the original condition at no cost to the Owner.
12. Contractor responsible for maintaining existing utility services (electrical, sanitary, storm) during construction unless otherwise indicated in the Contract Documents.
13. Contractor shall coordinate all work so public sidewalk remains open throughout construction.
14. Refer to civil and electrical plans for additional utility adjustments and removals.
15. Refer to civil plans for silt fencing locations.
16. Refer to specifications for additional conditions, standards and notes.

SITE PREPARATION AND REMOVALS LEGEND

- Remove and dispose concrete paving and gravel base. Remove subgrade material as needed.
- Remove and dispose asphalt paving and gravel base. Remove subgrade material as needed.
- Remove and dispose gravel paving. Remove subgrade material as needed.
- Clear and grub
- Tree Protection Fence
- Item to be removed
- Item to be protected
- Curb to be removed
- Limit of sawcut
- Construction Fence
- Fence to be removed
- Item to be relocated

0 15' 30' 60'
SCALE: 1" = 30'-0"

RVi
22 East Chicago Avenue
Suite 200a
Naperville, IL 60540
Tel: 312.634.2100
www.rvilanning.com

PREPARED FOR
CITY OF LAKE FOREST

800 N. FIELD DRIVE
LAKE FOREST, ILLINOIS 60045

CONSULTANTS

CIVIL ENGINEER
HEY AND ASSOCIATES, INC.
26575 W. COMMERCE DRIVE
SUITE 601
VOLO, ILLINOIS 60073
T 847.740.0888

ELECTRICAL ENGINEER
NOVA ENGINEERING, PC
2338 S. CLINE AVENUE
SCHERERVILLE, INDIANA 46375
T 219.865.3352

SOUTH PARK PHASE TWO

ISSUE FOR BID
150 S. MAYWOOD RD.
LAKE FOREST, ILLINOIS 60045

PROJECT NO:	26000793
DATE:	10/28/2026
DRAWN:	MDB/AMM
REVIEWED:	LJL

OCTOBER 28, 2026
REVISIONS:

NO.	DATE	ISSUE
3	11/11/2026	ADDENDUM 03

SITE PREPARATION AND REMOVALS PLAN - NORTH

L2.0

01_ORIGINAL ISSUE

L:\2026\26000793 south park ph2\05 production\03 CD\01 current plans\L2.0 Site Preparation and Removals Plan.dwg 11/11/2026 mirandi berger

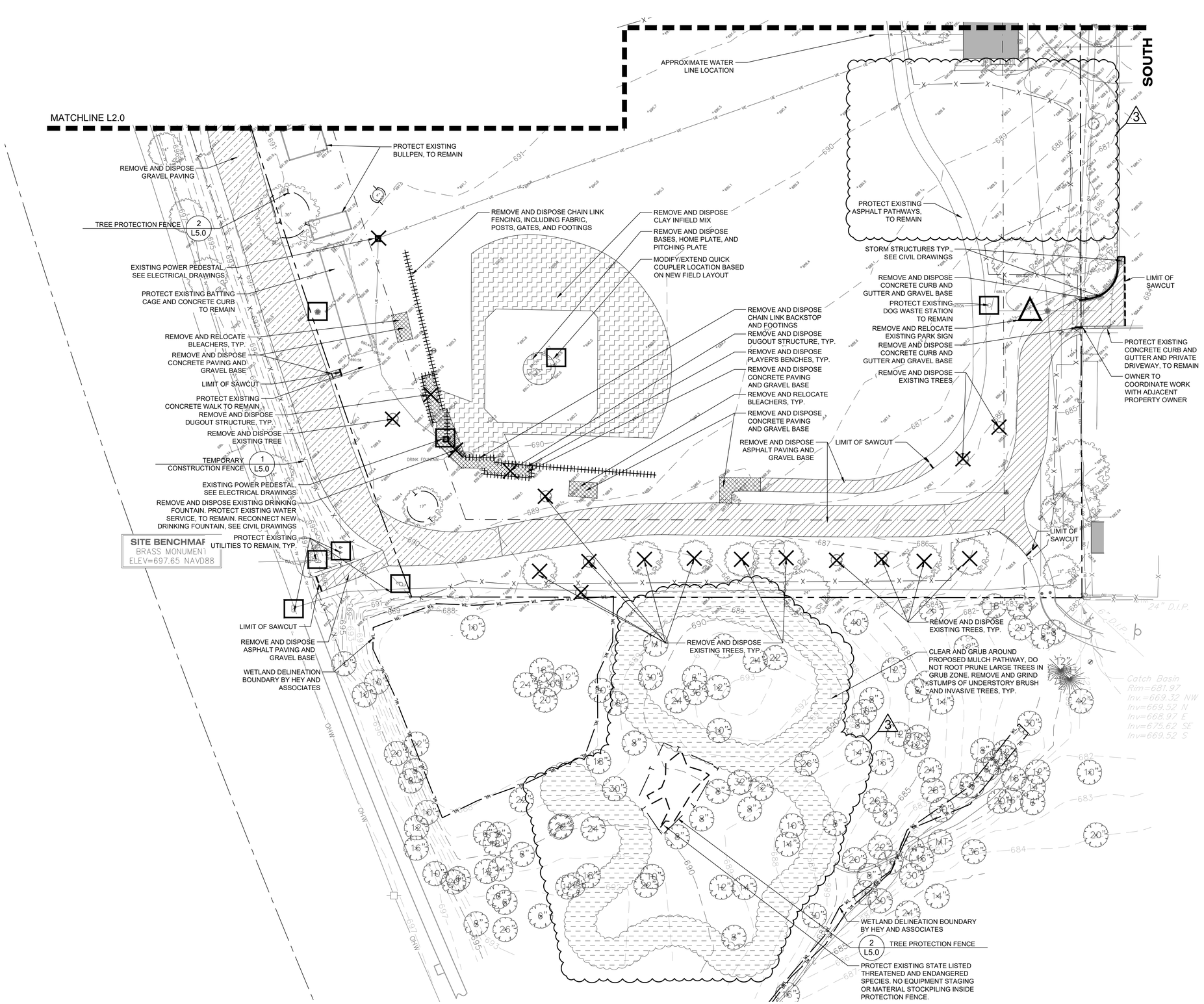

SITE PREPARATION AND REMOVALS NOTES

1. Contractor shall install construction fence at the limits of construction prior to beginning work. Maintain and adjust construction fencing as needed during progress of construction. Staging and construction access shall be approved by Owner.
2. Contractor shall install tree protection fencing as shown on the plans prior to beginning work. Maintain and adjust tree protection fencing as needed during progress of construction. Storage of materials, vehicular access, and all other construction activities are strictly prohibited within the limits of the tree protection fencing.
3. Plans indicate general location and limits of removals. Contractor shall perform removals only as necessary for construction of proposed improvements. No additional payments will be made for removals or restoration not required to construct the improvements as drawn and specified. Refer to Layout Plan for more specific information regarding proposed improvements and verify conditions in the field prior to performing removals.
4. Sawcut and remove concrete paving to nearest joint where indicated. All saw cuts required for removal items to be included in the unit cost of that particular pay item.
5. Tree stumps shall be ground to a minimum depth of 18" below existing grade or as required to properly perform the work.
6. Remove and dispose of turf where planting beds are designated. Refer to Planting Plan for limits of proposed landscape improvements.
7. Where turf or plantings are proposed in existing paved areas, remove all base material.
8. Remove all utilities designated for removal to extent required for improvements, unless otherwise noted. Cap ends of any remaining underground conduit and piping, and pull all electrical wire out at source.
9. Items indicated for Removal shall include complete removal of above grade item and below grade appurtances (foundations, urban fill, wiring, piping, etc.) including disposal off-site following applicable codes and ordinances, unless otherwise shown on the plans.
10. Items indicated as Remove and Salvage shall include careful protection, removal, and storage of items. For reinstall items, Contractor shall store during construction. All other Salvage items shall be delivered to location as indicated by owner unless otherwise shown on the plans.
11. Contractor to protect all existing utilities and all other site features not designated for removal. Contractor is responsible for replacing/repairing any existing utilities or other site features damaged during construction to the original condition at no cost to the Owner.
12. Contractor responsible for maintaining existing utility services (electrical, sanitary, storm) during construction unless otherwise indicated in the Contract Documents.
13. Contractor shall coordinate all work so public sidewalk remains open throughout construction.
14. Refer to civil and electrical plans for additional utility adjustments and removals.
15. Refer to civil plans for silt fencing locations.
16. Refer to specifications for additional conditions, standards and notes.

SITE PREPARATION AND REMOVALS LEGEND

- Remove and dispose concrete paving and gravel base. Remove subgrade material as needed.
- Remove and dispose asphalt paving and gravel base. Remove subgrade material as needed.
- Remove and dispose gravel paving. Remove subgrade material as needed.
- Clear and grub
- Tree Protection Fence
- Item to be removed
- Item to be protected
- Curb to be removed
- Limit of sawcut
- Construction Fence
- Fence to be removed
- Item to be relocated

0 15' 30' 60'
SCALE: 1" = 30'-0"

RVi
22 East Chicago Avenue
Suite 200a
Naperville, IL 60540
Tel: 312.634.2100
www.rvilanning.com

PREPARED FOR
CITY OF LAKE FOREST
800 N. FIELD DRIVE
LAKE FOREST, ILLINOIS 60045

CONSULTANTS

CIVIL ENGINEER
HEY AND ASSOCIATES, INC.
26575 W. COMMERCE DRIVE
SUITE 601
VOLO, ILLINOIS 60073
T 847.740.0888

ELECTRICAL ENGINEER
NOVA ENGINEERING, PC
2338 S. CLINE AVENUE
SCHERERVILLE, INDIANA 46375
T 219.865.3352

SOUTH PARK PHASE TWO

ISSUE FOR BID
150 S. MAYWOOD RD.
LAKE FOREST, ILLINOIS 60045

PROJECT NO:	26000793
DATE:	10/28/2026
DRAWN:	MDB/AMM
REVIEWED:	LJL

OCTOBER 28, 2026
REVISIONS:

NO.	DATE	ISSUE
1	11/11/2026	ADDENDUM 03

SITE PREPARATION AND REMOVALS PLAN - SOUTH

L2.1

01_ORIGINAL ISSUE

L:\2026\26000793 south park ph2\05 production\03 CD\01 current plans\L2.0 Site Preparation and Removals Plan.dwg 11/11/2026 mirandi berger

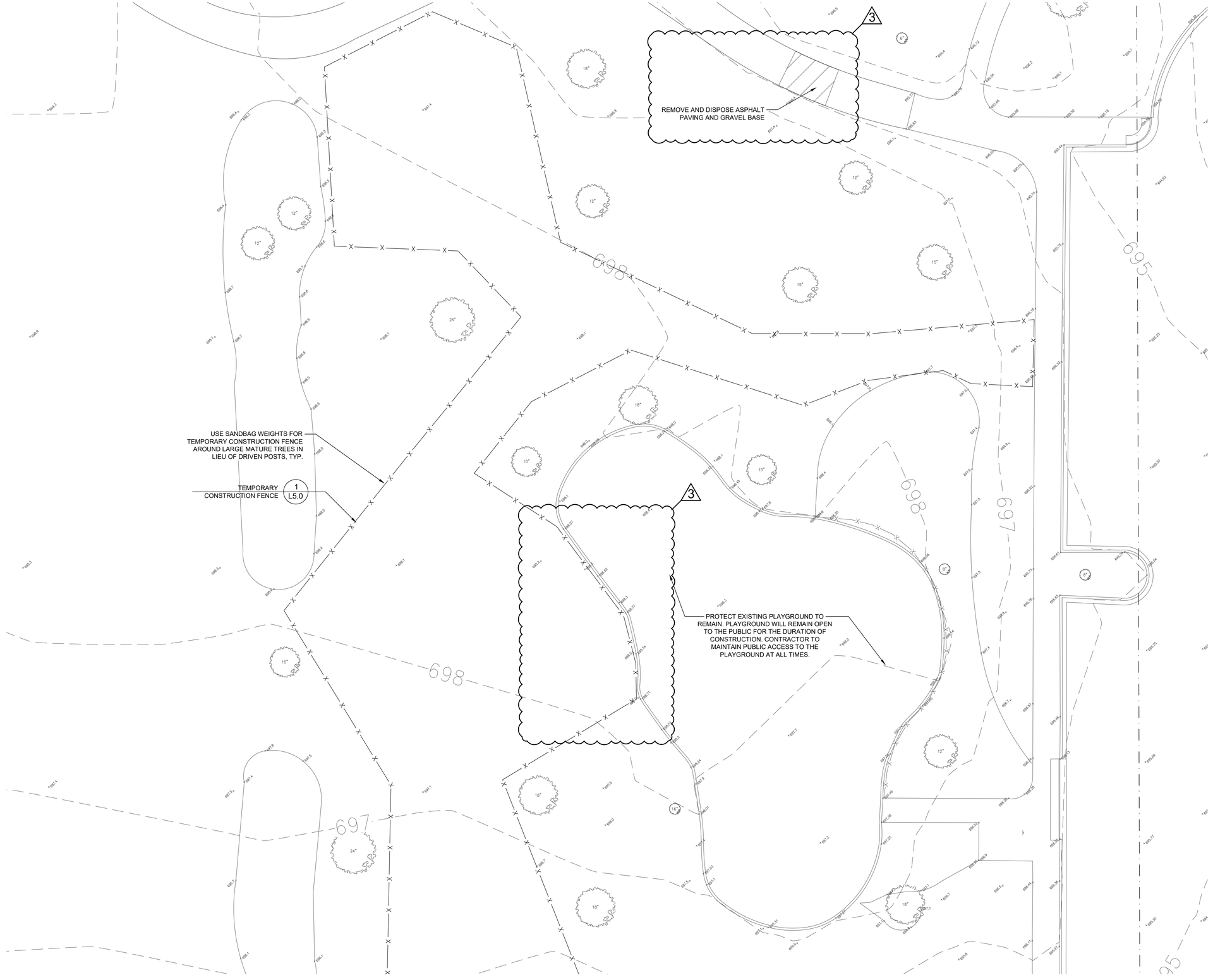

SITE PREPARATION AND REMOVALS NOTES

1. Contractor shall install construction fence at the limits of construction prior to beginning work. Maintain and adjust construction fencing as needed during progress of construction. Staging and construction access shall be approved by Owner.
2. Contractor shall install tree protection fencing as shown on the plans prior to beginning work. Maintain and adjust tree protection fencing as needed during progress of construction. Storage of materials, vehicular access, and all other construction activities are strictly prohibited within the limits of the tree protection fencing.
3. Plans indicate general location and limits of removals. Contractor shall perform removals only as necessary for construction of proposed improvements. No additional payments will be made for removals or restoration not required to construct the improvements as drawn and specified. Refer to Layout Plan for more specific information regarding proposed improvements and verify conditions in the field prior to performing removals.
4. Sawcut and remove concrete paving to nearest joint where indicated. All saw cuts required for removal items to be included in the unit cost of that particular pay item.
5. Tree stumps shall be ground to a minimum depth of 18" below existing grade or as required to properly perform the work.
6. Remove and dispose of turf where planting beds are designated. Refer to Planting Plan for limits of proposed landscape improvements.
7. Where turf or plantings are proposed in existing paved areas, remove all base material.
8. Remove all utilities designated for removal to extent required for improvements, unless otherwise noted. Cap ends of any remaining underground conduit and piping, and pull all electrical wire out at source.
9. Items indicated for Removal shall include complete removal of above grade item and below grade appurtances (foundations, urban fill, wiring, piping, etc.) including disposal off-site following applicable codes and ordinances, unless otherwise shown on the plans.
10. Items indicated as Remove and Salvage shall include careful protection, removal, and storage of items. For reinstall items, Contractor shall store during construction. All other Salvage items shall be delivered to location as indicated by owner unless otherwise shown on the plans.
11. Contractor to protect all existing utilities and all other site features not designated for removal. Contractor is responsible for replacing/repairing any existing utilities or other site features damaged during construction to the original condition at no cost to the Owner.
12. Contractor responsible for maintaining existing utility services (electrical, sanitary, storm) during construction unless otherwise indicated in the Contract Documents.
13. Contractor shall coordinate all work so public sidewalk remains open throughout construction.
14. Refer to civil and electrical plans for additional utility adjustments and removals.
15. Refer to specifications for additional conditions, standards and notes.

SITE PREPARATION AND REMOVALS LEGEND

- Remove and dispose concrete paving and gravel base. Remove subgrade material as needed.
- Remove and dispose asphalt paving and gravel base. Remove subgrade material as needed.
- Remove and dispose gravel paving. Remove subgrade material as needed.
- Clear and grub
- Tree Protection Fence
- Item to be removed
- Item to be protected
- Curb to be removed
- Limit of sawcut
- Silt Fence
- Construction Fence
- Fence to be removed
- Item to be relocated

0 5' 10' 20'
SCALE: 1" = 10'-0"

RVi
22 East Chicago Avenue
Suite 200a
Naperville, IL 60540
Tel: 312.634.2100
www.rviplanning.com

PREPARED FOR
CITY OF LAKE FOREST

800 N. FIELD DRIVE
LAKE FOREST, ILLINOIS 60045

CONSULTANTS

CIVIL ENGINEER
HEY AND ASSOCIATES, INC.
26575 W. COMMERCE DRIVE
SUITE 601
VOLO, ILLINOIS 60073
T 847.740.0888

ELECTRICAL ENGINEER
NOVA ENGINEERING, PC
2338 S. CLINE AVENUE
SCHERERVILLE, INDIANA 46375
T 219.865.3352

SOUTH PARK PHASE TWO

ISSUE FOR BID
150 S. MAYWOOD RD.
LAKE FOREST, ILLINOIS 60045

PROJECT NO:	26000793
DATE:	10/28/2026
DRAWN:	MDB/AMM
REVIEWED:	LJL

OCTOBER 28, 2026
REVISIONS:

NO.	DATE	ISSUE
1	11/11/2026	ADDENDUM 03

SITE PREPARATION AND REMOVALS PLAN - ENLARGEMENT

L2.2

01_ORIGINAL ISSUE

L:\2026\26000793 south park ph2\05 production\03 CD\01 current plans\L2.0 Site Preparation and Removals Plan.dwg 11/11/2026 mirandi berger

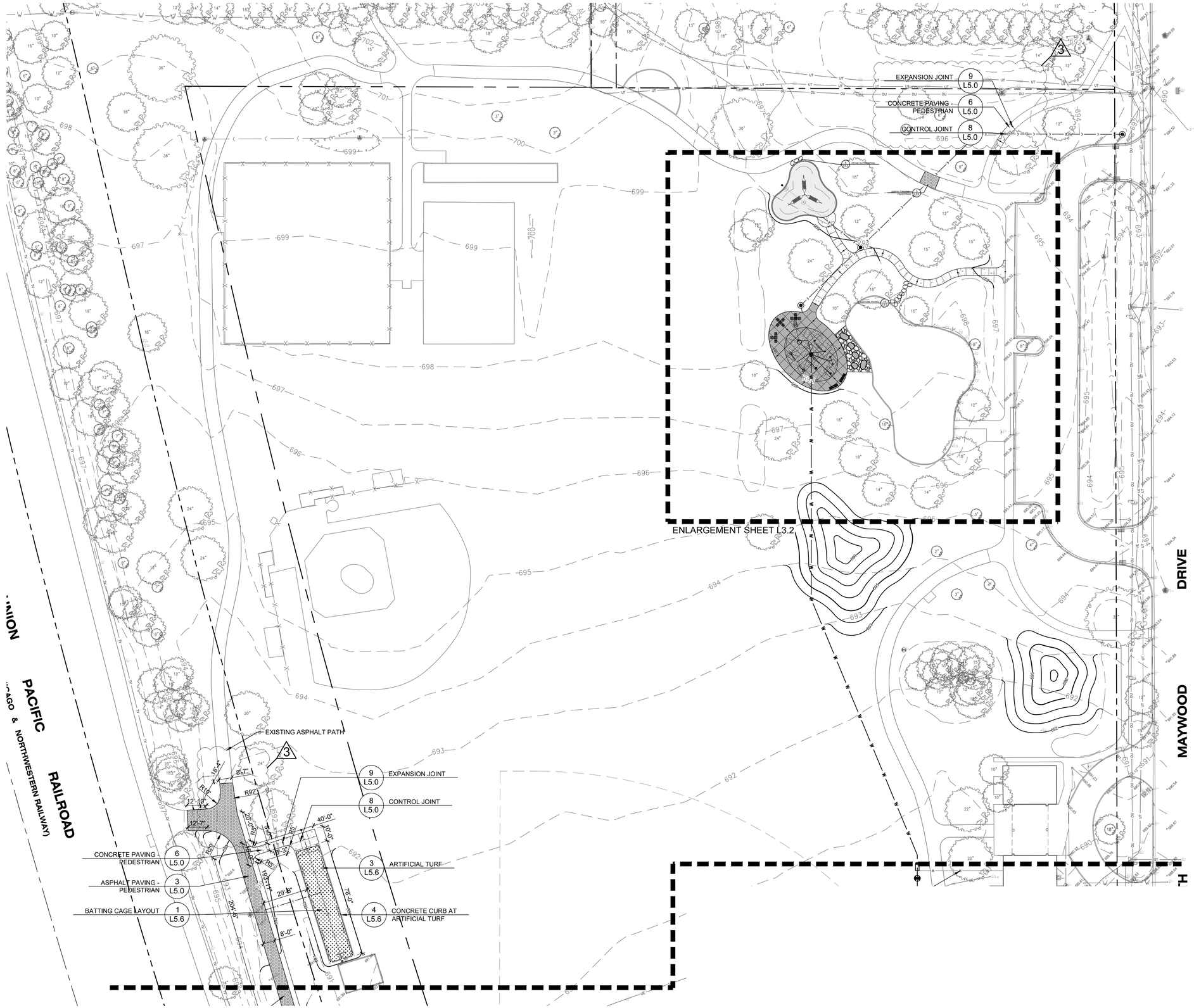

LAYOUT NOTES

1. Contractor responsible for field layout of all new improvements. Digital files of geometric information will be provided upon request in AutoCAD format. No additional payment will be made for adjustments necessary to construct the work as drawn.
2. Contractor responsible to coordinate work in order to obtain approval of all layout by Owners Representative prior to construction. No additional payment will be made to correct work if constructed incorrectly without pre-approval by Owners Representative.
3. Contractor responsible to maintain all layout stakes during construction. No additional payment will be made to replace layout stakes.
4. Place stakes at edges of fields, limits of splashpad, shelter, parking lot and every 25 feet on center along centerline of all pathways for review by the Owner's Representative prior to earthwork operations.
5. All dimensions from roadway are from Back of Curb unless otherwise noted.
6. All curves and radii to be smooth and not segmented.
7. Contractor to provide layout stakes every 10 feet minimum for large arcs where radius points are not accessible.
8. Adjustment to stake locations due to discrepancies between coordinates and dimensions is incidental to the contract. No additional payments will be made for this work.
9. All roadway widths are measured from edge of pavement to edge of pavement unless otherwise shown on the plans.
10. Contractor responsible to take delivery, assemble and install all materials and furnishings per manufacturer's instructions.
11. Place control and expansion joints as shown on plans and details for all curbs, walks, walls, steps, and concrete paving. Where joints are not shown, place control joints a maximum of 10 feet on center, expansion joints a maximum of 30 feet on center, and between all separate pours.
12. Contractor will maintain use zone requirements within soft surfacing; no use zone will overlap or be tangent unless noted. Adjust barrier curb and/or adjacent paving as needed to accommodate equipment fall zones.
13. Coordinate location of storm line with hammock and fitness equipment footings and obtain Owner's approval prior to installation.
14. Layout of soft surface shall be verified in field by landscape architect.
15. Refer to specifications for additional conditions, standards and notes.

LAYOUT LEGEND

- Asphalt Paving - Vehicular
- Asphalt Paving - Pedestrian
- Concrete Paving - Pedestrian
- Concrete Paving - Splash Pad
- Poured in Place Rubber Surfacing
- Artificial Turf Surfacing
- Concrete Paving - Splash Pad with AquaFlex Surfacing

0 15' 30' 60'
SCALE: 1" = 30'-0"

RVi
22 East Chicago Avenue
Suite 200a
Naperville, IL 60540
Tel: 312.634.2100
www.rvilanning.com

PREPARED FOR
CITY OF LAKE FOREST

800 N. FIELD DRIVE
LAKE FOREST, ILLINOIS 60045

CONSULTANTS

CIVIL ENGINEER
HEY AND ASSOCIATES, INC.
26575 W. COMMERCE DRIVE
SUITE 601
VOLO, ILLINOIS 60073
T 847.740.0888

ELECTRICAL ENGINEER
NOVA ENGINEERING, PC
2338 S. CLINE AVENUE
SCHERERVILLE, INDIANA 46375
T 219.865.3352

SOUTH PARK PHASE TWO

ISSUE FOR BID
150 S. MAYWOOD RD.
LAKE FOREST, ILLINOIS 60045

PROJECT NO:	26000793
DATE:	10/28/2026
DRAWN:	MDB/AMM
REVIEWED:	LJL

OCTOBER 28, 2026
REVISIONS:

NO.	DATE	ISSUE
1	11/11/2026	ADDENDUM 03

LAYOUT AND MATERIALS PLAN - NORTH

L3.0

01_ORIGINAL ISSUE

L:\2026\26000793 south park ph2\05 production\03 CD\01 current plans\L3.0 Layout and Materials Plan.dwg 11/11/2026 miranci berger

SOUTH

ASPHALT PAVING - PEDESTRIAN 3 L5.0
EXISTING BATTING CAGE
RELOCATED BLEACHERS, BY OWNER, TYP.
RELOCATED GRILL
GRILL FOOTING 5 L5.5
CONCRETE PAVING - PEDESTRIAN 6 L5.0
BAG TOSS LAYOUT 7 L5.5
PICNIC SHELTER 1 L5.10
GAME TABLES, BY OWNER
BACKSTOP WITH OVERHEAD NETTING 5 L5.3
DRINKING FOUNTAIN 4 L5.8
CURB RAMP WITH DETECTABLE WARNING 1 L5.1
DEPRESSED CURB 5 L5.1
BIKE RACKS, BY OWNER, TYP.
BIKE PUMP STATION, BY OWNER
CONCRETE PAVING - PEDESTRIAN 6 L5.0
BIKE REPAIR STATION, BY OWNER
COLLAPSIBLE BOLLARD FOOTING AND ANCHOR 2 L5.12
DEPRESSED CURB 5 L5.1
EXPANSION JOINT 9 L5.0
CONTROL JOINT 8 L5.0
APPROXIMATE LOCATION OF SURVEYED THREATENED AND ENDANGERED SPECIES
INTERPRETIVE SIGN TYP. 5 L5.8

APPROXIMATE WATER LINE LOCATION
FITNESS STATION ENLARGEMENT 3 L5.8
CONTROL JOINT 8 L5.0
CONCRETE PAVING - PEDESTRIAN 6 L5.0
EXISTING ASPHALT PATH
1 L5.9 DUGOUT STRUCTURE
1 L5.4 BALLFIELD ENLARGEMENT
13 L5.0 INFIELD MIX
PLAYER'S BENCH, BY OWNER,TYP.
6 L5.1 ADA PARKING SIGN,TYP.
1 L5.1 CURB RAMP WITH DETECTABLE WARNING
ADA PARKING MARKING LAYOUT L5.1
5 L5.4 FENCING / NETTING ELEVATION, TYP.
3 L5.1 CURB AND GUTTER TYP.
6 L5.0 CONCRETE PAVING - PEDESTRIAN
4 L5.0 ASPHALT PAVING - VEHICULAR
1 L5.1 CURB RAMP WITH DETECTABLE WARNING
5 L5.1 DEPRESSED CURB
CURB CUTS, TYP. SEE CIVIL DRAWINGS
RELOCATED PARK SIGN
CROSSWALK STRIPING TYP. 4 L5.1
CURB RAMP WITH DETECTABLE WARNING 1 L5.1
CONCRETE PAVING - PEDESTRIAN 6 L5.0
5 L5.1 DEPRESSED CURB
1 L5.1 CURB RAMP WITH DETECTABLE WARNING
2 L5.12 COLLAPSIBLE BOLLARD FOOTING AND ANCHOR
15 L5.0 ENGINEERED WOOD FIBER

Catch Basin
Rim=681.97
Inv.=669.32 NW
Inv=669.52 N
Inv=668.97 E
Inv=675.62 SE
Inv=669.52 S

LAYOUT NOTES

1. Contractor responsible for field layout of all new improvements. Digital files of geometric information will be provided upon request in AutoCAD format. No additional payment will be made for adjustments necessary to construct the work as drawn.
2. Contractor responsible to coordinate work in order to obtain approval of all layout by Owners Representative prior to construction. No additional payment will be made to correct work if constructed incorrectly without pre-approval by Owners Representative.
3. Contractor responsible to maintain all layout stakes during construction. No additional payment will be made to replace layout stakes.
4. Place stakes at edges of fields, limits of splashpad, shelter, parking lot and every 25 feet on center along centerline of all pathways for review by the Owner's Representative prior to earthwork operations.
5. All dimensions from roadway are from Back of Curb unless otherwise noted.
6. All curves and radii to be smooth and not segmented.
7. Contractor to provide layout stakes every 10 feet minimum for large arcs where radius points are not accessible.
8. Adjustment to stake locations due to discrepancies between coordinates and dimensions is incidental to the contract. No additional payments will be made for this work.
9. All roadway widths are measured from edge of pavement to edge of pavement unless otherwise shown on the plans.
10. Contractor responsible to take delivery, assemble and install all materials and furnishings per manufacturer's instructions.
11. Place control and expansion joints as shown on plans and details for all curbs, walks, walls, steps, and concrete paving. Where joints are not shown, place control joints a maximum of 10 feet on center, expansion joints a maximum of 30 feet on center, and between all separate pours.
12. Contractor will maintain use zone requirements within soft surfacing; no use zone will overlap or be tangent unless noted. Adjust barrier curb and/or adjacent paving as needed to accommodate equipment fall zones.
13. Coordinate location of storm line with hammock and fitness equipment footings and obtain Owner's approval prior to installation.
14. Layout of soft surface shall be verified in field by landscape architect.
15. Refer to specifications for additional conditions, standards and notes.

LAYOUT LEGEND

- Asphalt Paving - Vehicular
- Asphalt Paving - Pedestrian
- Concrete Paving - Pedestrian
- Concrete Paving - Splash Pad
- Poured in Place Rubber Surfacing
- Artificial Turf Surfacing
- Concrete Paving - Splash Pad with AquaFlex Surfacing (3)

0 15' 30' 60'
SCALE: 1" = 30'-0"

RVi
22 East Chicago Avenue
Suite 200a
Naperville, IL 60540
Tel: 312.634.2100
www.rvilanning.com

PREPARED FOR
CITY OF LAKE FOREST

800 N. FIELD DRIVE
LAKE FOREST, ILLINOIS 60045

CONSULTANTS

CIVIL ENGINEER
HEY AND ASSOCIATES, INC.
26575 W. COMMERCE DRIVE
SUITE 601
VOLO, ILLINOIS 60073
T 847.740.0888

ELECTRICAL ENGINEER
NOVA ENGINEERING, PC
2338 S. CLINE AVENUE
SCHERERVILLE, INDIANA 46375
T 219.865.3352

SOUTH PARK PHASE TWO

ISSUE FOR BID
150 S. MAYWOOD RD.
LAKE FOREST, ILLINOIS 60045

PROJECT NO:	26000793
DATE:	10/28/2026
DRAWN:	MDB/AMM
REVIEWED:	LJL

OCTOBER 28, 2026
REVISIONS:

NO.	DATE	ISSUE
1	11/11/2026	ADDENDUM 03

LAYOUT AND MATERIALS PLAN - SOUTH

L3.1

01_ORIGINAL ISSUE

L:\2026\26000793 south park ph2\05 production\03 CD\01 current plans\L3.0 Layout and Materials Plan.dwg 11/11/2026 mirandi berger



LAYOUT NOTES

1. Contractor responsible for field layout of all new improvements. Digital files of geometric information will be provided upon request in AutoCAD format. No additional payment will be made for adjustments necessary to construct the work as drawn.
2. Contractor responsible to coordinate work in order to obtain approval of all layout by Owners Representative prior to construction. No additional payment will be made to correct work if constructed incorrectly without pre-approval by Owners Representative.
3. Contractor responsible to maintain all layout stakes during construction. No additional payment will be made to replace layout stakes.
4. Place stakes at edges of fields, limits of splashpad, shelter, parking lot and every 25 feet on center along centerline of all pathways for review by the Owner's Representative prior to earthwork operations.
5. All dimensions from roadway are from Back of Curb unless otherwise noted.
6. All curves and radii to be smooth and not segmented.
7. Contractor to provide layout stakes every 10 feet minimum for large arcs where radius points are not accessible.
8. Adjustment to stake locations due to discrepancies between coordinates and dimensions is incidental to the contract. No additional payments will be made for this work.
9. All roadway widths are measured from edge of pavement to edge of pavement unless otherwise shown on the plans.
10. Contractor responsible to take delivery, assemble and install all materials and furnishings per manufacturer's instructions.
11. Place control and expansion joints as shown on plans and details for all curbs, walks, walls, steps, and concrete paving. Where joints are not shown, place control joints a maximum of 10 feet on center, expansion joints a maximum of 30 feet on center, and between all separate pours.
12. Contractor will maintain use zone requirements within soft surfacing; no use zone will overlap or be tangent unless noted. Adjust barrier curb and/or adjacent paving as needed to accommodate equipment fall zones.
13. Coordinate location of storm line with hammock and fitness equipment footings and obtain Owner's approval prior to installation.
14. Layout of soft surface shall be verified in field by landscape architect.
15. Refer to specifications for additional conditions, standards and notes.

LAYOUT LEGEND

- Asphalt Paving - Vehicular
- Asphalt Paving - Pedestrian
- Concrete Paving - Pedestrian
- Concrete Paving - Splash Pad
- Poured in Place Rubber Surfacing
- Artificial Turf Surfacing
- Concrete Paving - Splash Pad with AquaFlex Surfacing (3)

0 5' 10' 20'
SCALE: 1" = 10'-0"

RVi
22 East Chicago Avenue
Suite 200a
Naperville, IL 60540
Tel: 312.634.2100
www.rvilanning.com

PREPARED FOR
CITY OF LAKE FOREST

800 N. FIELD DRIVE
LAKE FOREST, ILLINOIS 60045

CONSULTANTS

CIVIL ENGINEER
HEY AND ASSOCIATES, INC.
26575 W. COMMERCE DRIVE
SUITE 601
VOLO, ILLINOIS 60073
T 847.740.0888

ELECTRICAL ENGINEER
NOVA ENGINEERING, PC
2338 S. CLINE AVENUE
SCHERERVILLE, INDIANA 46375
T 219.865.3352

SOUTH PARK PHASE TWO

ISSUE FOR BID
150 S. MAYWOOD RD.
LAKE FOREST, ILLINOIS 60045

PROJECT NO:	26000793
DATE:	10/28/2026
DRAWN:	MDB/AMM
REVIEWED:	LJL

OCTOBER 28, 2026
REVISIONS:

NO.	DATE	ISSUE
1	11/11/2026	ADDENDUM 03

LAYOUT AND MATERIALS PLAN - ENLARGEMENT

L3.2

01_ORIGINAL ISSUE

L:\2026\26000793 south park ph2\05 production\03 CD\01 current plans\L3.0 Layout and Materials Plan.dwg 11/11/2026 mirandi berger

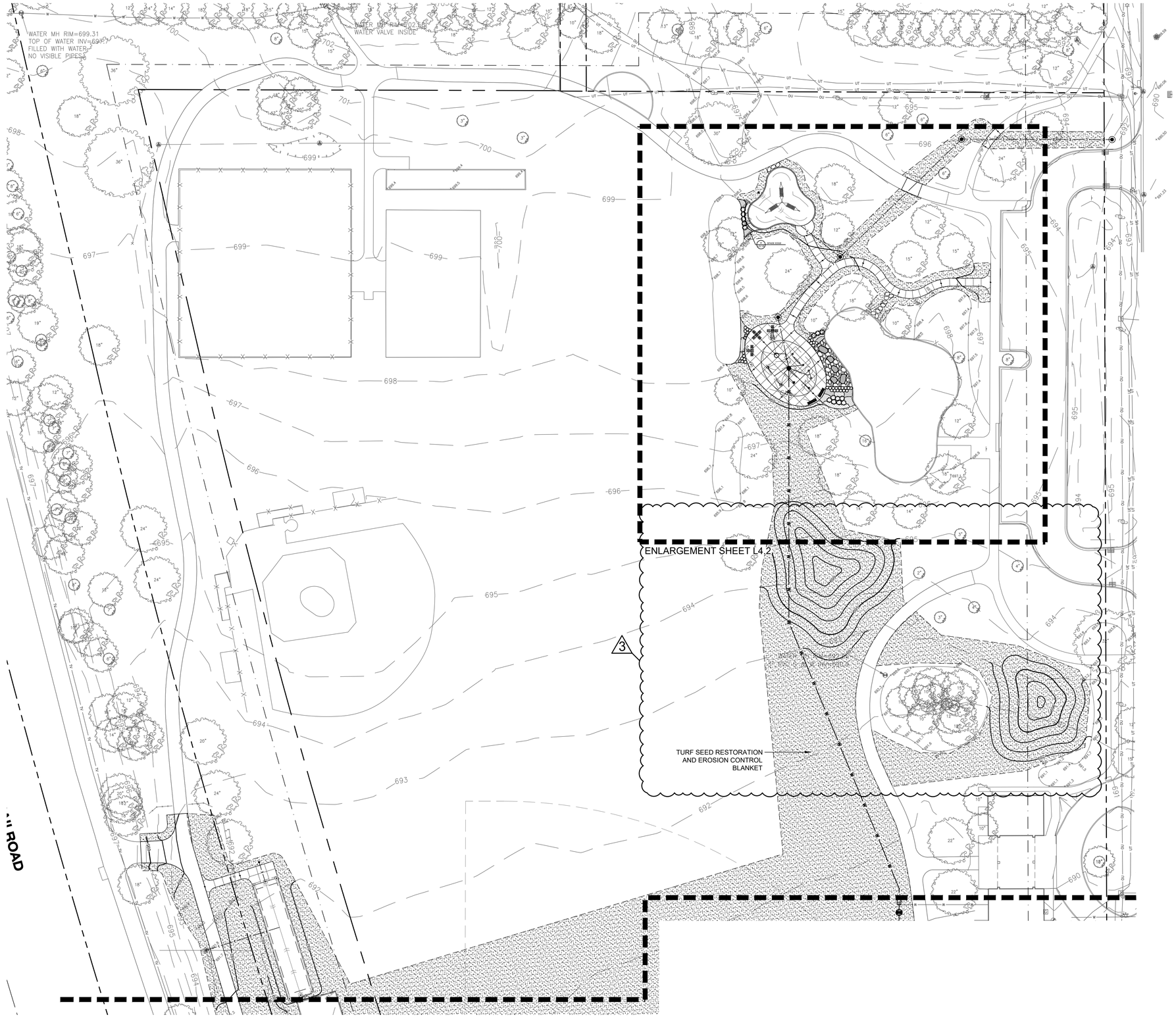

PLANTING NOTES

1. Seed limit line is approximate. Seed to limits of grading and disturbance. Contractor responsible for restoration of any unauthorized disruption outside of designated construction area.
2. Contractor responsible for erosion control in all seeded areas.
3. Tree mulch rings in turf areas are 5 foot diameter, typical. Contractor shall provide a mulch ring around all existing trees within the limit of work. Remove all existing grass from area to be mulched and provide a typical v-trench edge.
4. Bedlines are to be spade cut to a minimum depth of 3 inches unless otherwise shown on the plans. Curved bedlines are to be smooth and not segmented.
5. Do not locate plants within 10' of utility structures, or within 5' horizontally of underground utility lines unless otherwise shown on the plans. Consult with Landscape Architect if these conditions exist.
6. Plants and other materials are quantified and summarized for the convenience of the Owner and jurisdictional agencies only. Confirm and install sufficient quantities to complete the work as drawn and specified. No additional payments will be made for materials required to complete the work as drawn and specified.
7. Refer to specifications for additional conditions, standards and notes.

PLANTING LEGEND

Turf Seeding and Erosion Control Blanket

0 15' 30' 60'
SCALE: 1" = 30'-0"

RVi
22 East Chicago Avenue
Suite 200a
Naperville, IL 60540
Tel: 312.634.2100
www.rvilanning.com

PREPARED FOR
CITY OF LAKE FOREST

800 N. FIELD DRIVE
LAKE FOREST, ILLINOIS 60045

CONSULTANTS

CIVIL ENGINEER
HEY AND ASSOCIATES, INC.
26575 W. COMMERCE DRIVE
SUITE 601
VOLO, ILLINOIS 60073
T 847.740.0888

ELECTRICAL ENGINEER
NOVA ENGINEERING, PC
2338 S. CLINE AVENUE
SCHERERVILLE, INDIANA 46375
T 219.865.3352

SOUTH PARK PHASE TWO

ISSUE FOR BID
150 S. MAYWOOD RD.
LAKE FOREST, ILLINOIS 60045

PROJECT NO:	26000793
DATE:	10/28/2026
DRAWN:	MDB/AMM
REVIEWED:	LJL

OCTOBER 28, 2026
REVISIONS:

NO.	DATE	ISSUE
1	11/11/2026	ADDENDUM 03

PLANTING PLAN - NORTH

L4.0

01_ORIGINAL ISSUE

L:\2026\26000793 south park ph2\05 production\03 CD\01 current plans\L4.0 Planting Plan.dwg 11/11/2026 miranda berger

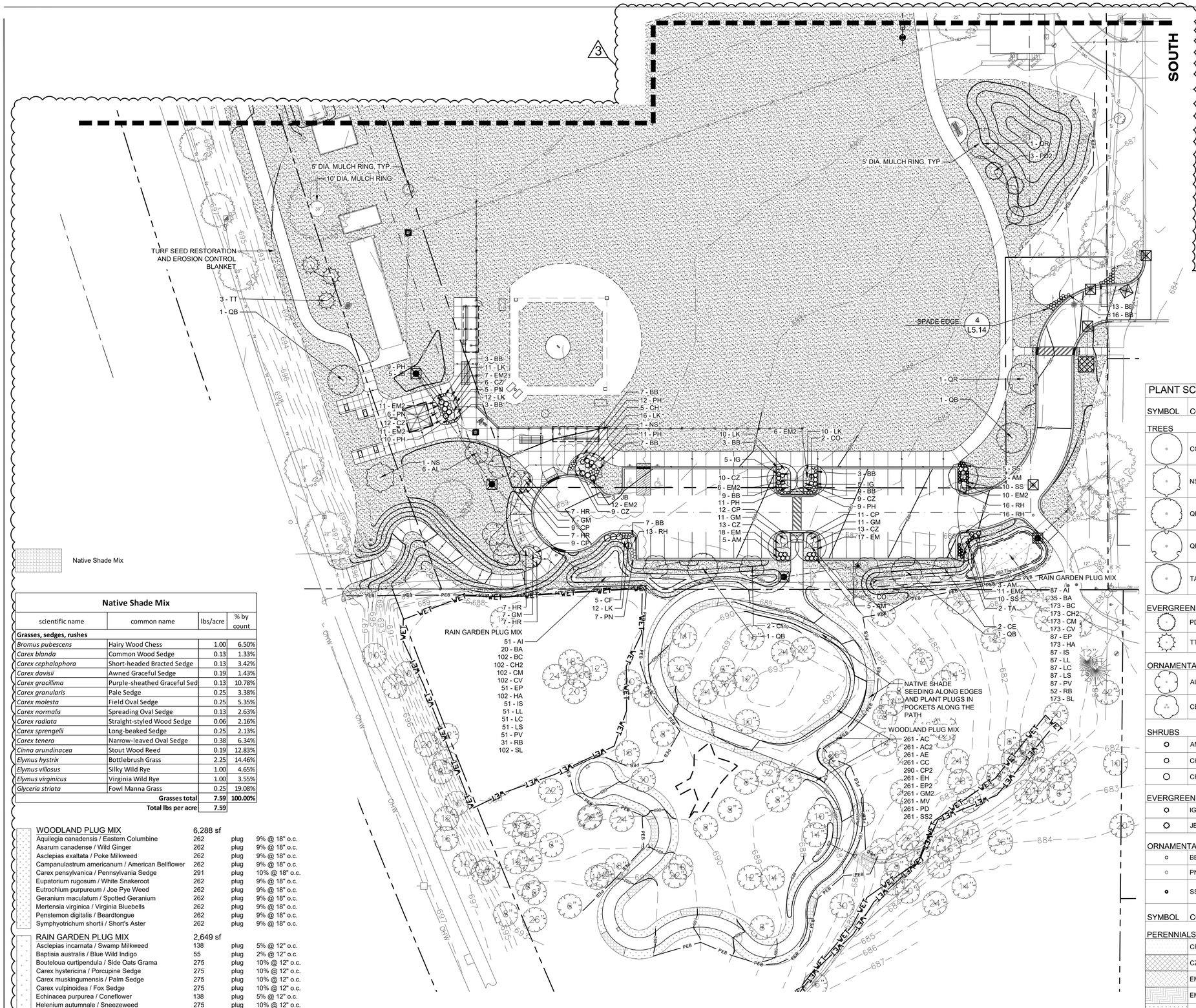

Native Shade Mix

Native Shade Mix			
scientific name	common name	lbs/acre	% by count
Grasses, sedges, rushes			
Bromus pubescens	Hairy Wood Chess	1.00	6.50%
Carex blanda	Common Wood Sedge	0.13	1.33%
Carex cephalophora	Short-headed Bracted Sedge	0.13	3.42%
Carex davisii	Awned Graceful Sedge	0.19	1.43%
Carex gracillima	Purple-sheathed Graceful Sed	0.13	10.78%
Carex granularis	Pale Sedge	0.25	3.38%
Carex molesta	Field Oval Sedge	0.25	5.35%
Carex normalis	Spreading Oval Sedge	0.13	2.63%
Carex radiata	Straight-styled Wood Sedge	0.06	2.16%
Carex sprengelii	Long-beaked Sedge	0.25	2.13%
Carex tenera	Narrow-leaved Oval Sedge	0.38	6.34%
Cinna arundinacea	Stout Wood Reed	0.19	12.83%
Elymus hystrix	Bottlebrush Grass	2.25	14.46%
Elymus villosus	Silky Wild Rye	1.00	4.65%
Elymus virginicus	Virginia Wild Rye	1.00	3.55%
Glyceria striata	Fowl Manna Grass	0.25	19.08%
	Grasses total	**7.59**	**100.00%**
	Total lbs per acre	**7.59**	

WOODLAND PLUG MIX	6,288 sf		
Aquilegia canadensis / Eastern Columbine	262	plug	9% @ 18" o.c.
Asarum canadense / Wild Ginger	262	plug	9% @ 18" o.c.
Asclepias exaltata / Poke Milkweed	262	plug	9% @ 18" o.c.
Campanulastrum americanum / American Bellflower	262	plug	9% @ 18" o.c.
Carex pensylvanica / Pennsylvania Sedge	291	plug	10% @ 18" o.c.
Eupatorium rugosum / White Snakeroot	262	plug	9% @ 18" o.c.
Eutrochium purpureum / Joe Pye Weed	262	plug	9% @ 18" o.c.
Geranium maculatum / Spotted Geranium	262	plug	9% @ 18" o.c.
Mertensia virginica / Virginia Bluebells	262	plug	9% @ 18" o.c.
Penstemon digitalis / Beardtongue	262	plug	9% @ 18" o.c.
Symphyotrichum shortii / Short's Aster	262	plug	9% @ 18" o.c.
RAIN GARDEN PLUG MIX	**2,649 sf**		
Asclepias incarnata / Swamp Milkweed	138	plug	5% @ 12" o.c.
Baptisia australis / Blue Wild Indigo	55	plug	2% @ 12" o.c.
Bouteloua curtipendula / Side Oats Grama	275	plug	10% @ 12" o.c.
Carex hystericina / Porcupine Sedge	275	plug	10% @ 12" o.c.
Carex muskingumensis / Palm Sedge	275	plug	10% @ 12" o.c.
Carex vulpinoidea / Fox Sedge	275	plug	10% @ 12" o.c.
Echinacea purpurea / Coneflower	138	plug	5% @ 12" o.c.
Helenium autumnale / Sneezeweed	275	plug	10% @ 12" o.c.
Iris virginica shrevei / Shreve's Iris	138	plug	5% @ 12" o.c.
Liatris ligulistylis / Meadow Blazing-star	138	plug	5% @ 12" o.c.
Lobelia cardinalis / Cardinal Flower	138	plug	5% @ 12" o.c.
Lobelia siphilitica / Great Lobelia	138	plug	5% @ 12" o.c.
Physostegia virginiana / Obedient Plant	138	plug	5% @ 12" o.c.
Rudbeckia fulgida / Coneflower	83	plug	3% @ 12" o.c.
Schizachyrium scoparium / Little Bluestem	275	plug	10% @ 12" o.c.

0 15' 30' 60'
SCALE: 1" = 30'-0"

PLANTING NOTES

1. Seed limit line is approximate. Seed to limits of grading and disturbance. Contractor responsible for restoration of any unauthorized disruption outside of designated construction area.
2. Contractor responsible for erosion control in all seeded areas.
3. Tree mulch rings in turf areas are 5 foot diameter, typical. Contractor shall provide a mulch ring around all existing trees within the limit of work. Remove all existing grass from area to be mulched and provide a typical v-trench edge.
4. Bedlines are to be spade cut to a minimum depth of 3 inches unless otherwise shown on the plans. Curved bedlines are to be smooth and not segmented.
5. Do not locate plants within 10' of utility structures, or within 5' horizontally of underground utility lines unless otherwise shown on the plans. Consult with Landscape Architect if these conditions exist.
6. Plants and other materials are quantified and summarized for the convenience of the Owner and jurisdictional agencies only. Confirm and install sufficient quantities to complete the work as drawn and specified. No additional payments will be made for materials required to complete the work as drawn and specified.
7. Refer to specifications for additional conditions, standards and notes.

PLANTING LEGEND

- Turf Seeding and Erosion Control Blanket
- Woodland Plug Mix
- Rain Garden Plug Mix

PLANT SCHEDULE L4.1

SYMBOL	CODE	BOTANICAL / COMMON NAME	SIZE		QTY
TREES					
	CO	Celtis occidentalis Common Hackberry	3" Cal		4
	NS	Nyssa sylvatica Tupelo	3" Cal		2
	QB	Quercus bicolor Swamp White Oak	3" Cal		4
	QR	Quercus rubra Northern Red Oak	3" Cal		2
	TA	Tilia americana American Linden	3" Cal		2
EVERGREEN TREES					
	PD2	Picea glauca 'Densata' Black Hills White Spruce	8' Ht.		3
	TT	Thuja occidentalis 'Techny' Techny Arborvitae	8' Ht.		3
ORNAMENTAL TREE					
	AL	Amelanchier laevis Allegheny Serviceberry Multi-trunk	8' Ht.		6
	CE	Cercis canadensis Eastern Redbud Multi-trunk	8' Ht.		4
SHRUBS					
	AM	Aronia melanocarpa 'Morton' Iroquois Beauty™ Black Chokeberry	3 Gal.		16
	CH	Clethra alnifolia 'Hummingbird' Hummingbird Summersweet	3 Gal.		5
	CF	Cornus sericea 'Farrow' Arctic Fire® Red Twig Dogwood	3 Gal.		5
EVERGREEN SHRUBS					
	IG	Ilex glabra Inkberry Holly	3 Gal.		10
	JB	Juniperus virginiana 'Blue Mountain' Nordic® Blue Eastern Redcedar	3 Gal.		8
ORNAMENTAL GRASSES					
	BB	Bouteloua gracilis 'Blonde Ambition' Blonde Ambition Blue Grama	2 Gal.		80
	PN	Panicum virgatum 'Northwind' Northwind Switch Grass	2 Gal.		18
	SS	Schizachyrium scoparium 'Standing Ovation' Standing Ovation Little Bluestem	2 Gal.		25
SYMBOL	CODE	BOTANICAL / COMMON NAME	SIZE	SPACING	QTY
PERENNIALS					
	CP	Carex pensylvanica Pennsylvania Sedge	1 Gal.	18" o.c.	41
	CZ	Coreopsis verticillata 'Zagreb' Zagreb Tickseed	1 Gal.	18" o.c.	72
	EM2	Echinacea purpurea 'Magnus' Magnus Purple Coneflower	1 Gal.	18" o.c.	74
	EM	Eurybia macrophylla Bigleaf Aster	1 Gal.	18" o.c.	35
	GM	Geranium maculatum Spotted Geranium	1 Gal.	18" o.c.	36
	HR	Heuchera richardsonii Prairie Alumroot	1 Gal.	18" o.c.	28
	LK	Liatris spicata 'Kobold' Kobold Blazing Star	1 Gal.	18" o.c.	68
	PH	Penstemon digitalis 'Husker Red' Husker Red Beardtongue	1 Gal.	18" o.c.	62

RVi
22 East Chicago Avenue
Suite 200a
Naperville, IL 60540
Tel: 312.634.2100
www.rvilanning.com

PREPARED FOR
CITY OF LAKE FOREST

800 N. FIELD DRIVE
LAKE FOREST, ILLINOIS 60045

CONSULTANTS

CIVIL ENGINEER
HEY AND ASSOCIATES, INC.
26575 W. COMMERCE DRIVE
SUITE 601
VOLO, ILLINOIS 60073
T 847.740.0888

ELECTRICAL ENGINEER
NOVA ENGINEERING, PC
2338 S. CLINE AVENUE
SCHERERVILLE, INDIANA 46375
T 219.865.3352

SOUTH PARK PHASE TWO

ISSUE FOR BID
150 S. MAYWOOD RD.
LAKE FOREST, ILLINOIS 60045

PROJECT NO: 26000793
DATE: 10/28/2026
DRAWN: MDB/AMM
REVIEWED: LJL

OCTOBER 28, 2026
REVISIONS:

NO.	DATE	ISSUE
1	11/11/2026	ADDENDUM 03

PLANTING PLAN - SOUTH

L4.1

01_ORIGINAL ISSUE

L:\2026\26000793 south park ph2\05 production\03 CD\01 current plans\L4.0 Planting Plan.dwg 11/11/2026 mirandi berger

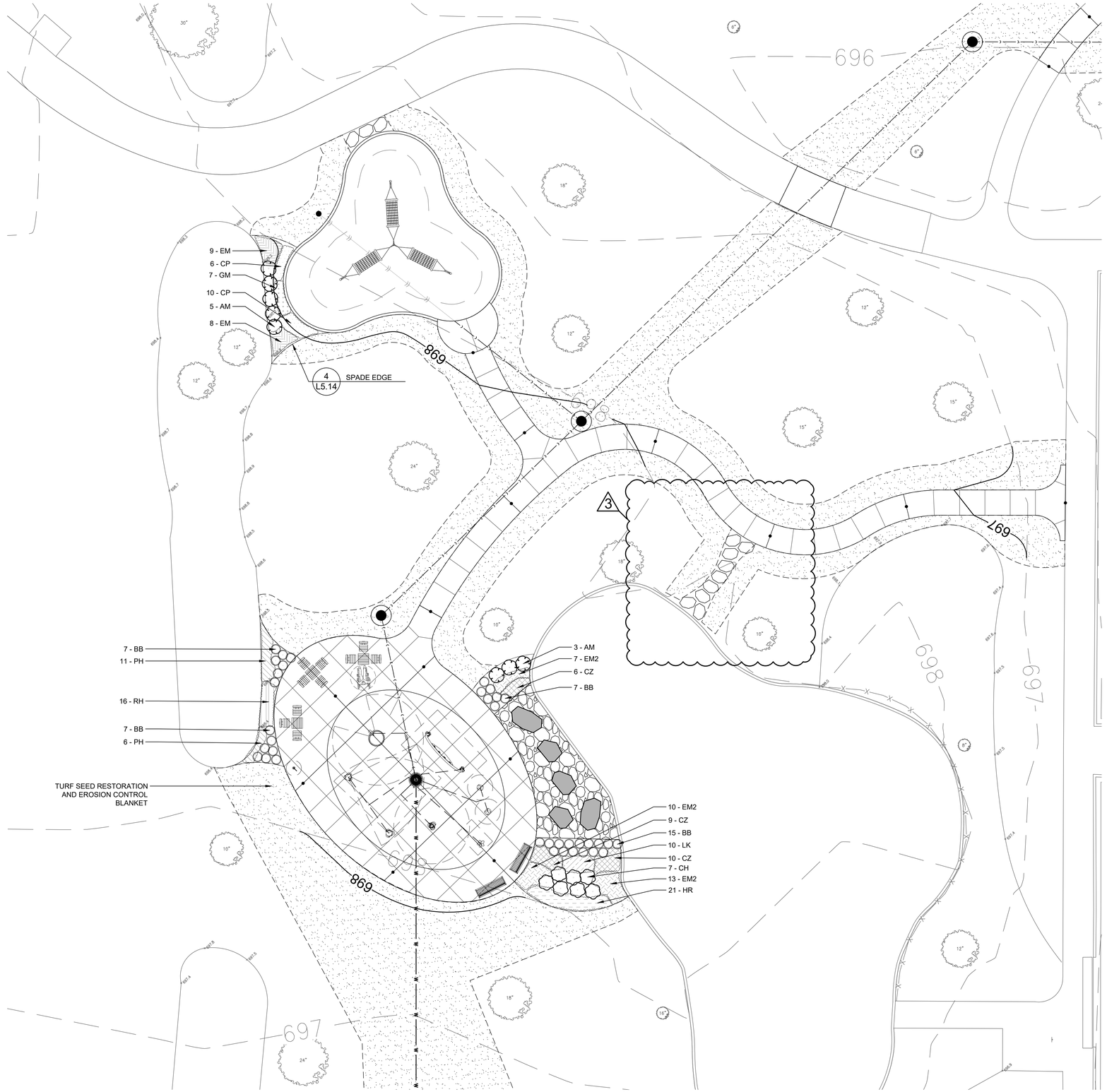

PLANTING NOTES

1. Seed limit line is approximate. Seed to limits of grading and disturbance. Contractor responsible for restoration of any unauthorized disruption outside of designated construction area.
2. Contractor responsible for erosion control in all seeded areas.
3. Tree mulch rings in turf areas are 5 foot diameter, typical. Contractor shall provide a mulch ring around all existing trees within the limit of work. Remove all existing grass from area to be mulched and provide a typical v-trench edge.
4. Bedlines are to be spade cut to a minimum depth of 3 inches unless otherwise shown on the plans. Curved bedlines are to be smooth and not segmented.
5. Do not locate plants within 10' of utility structures, or within 5' horizontally of underground utility lines unless otherwise shown on the plans. Consult with Landscape Architect if these conditions exist.
6. Plants and other materials are quantified and summarized for the convenience of the Owner and jurisdictional agencies only. Confirm and install sufficient quantities to complete the work as drawn and specified. No additional payments will be made for materials required to complete the work as drawn and specified.
7. Refer to specifications for additional conditions, standards and notes.

PLANTING LEGEND

Turf Seeding and Erosion Control Blanket

PLANT SCHEDULE SPLASH PAD ENLARGEMENT

SYMBOL	CODE	BOTANICAL NAME	COMMON NAME	SIZE		QTY
SHRUBS						
	AM	Aronia melanocarpa 'Morton'	Iroquois Beauty™ Black Chokeberry	3 Gal.		8
	CH	Clethra alnifolia 'Hummingbird'	Hummingbird Summersweet	3 Gal.		7
ORNAMENTAL GRASSES						
	BB	Bouteloua gracilis 'Blonde Ambition'	Blonde Ambition Blue Grama	2 Gal.		36
SYMBOL	CODE	BOTANICAL NAME	COMMON NAME	SIZE	SPACING	QTY
PERENNIALS						
	CP	Carex pensylvanica	Pennsylvania Sedge	1 Gal.	18" o.c.	16
	CZ	Coreopsis verticillata 'Zagreb'	Zagreb Tickseed	1 Gal.	18" o.c.	25
	EM2	Echinacea purpurea 'Magnus'	Magnus Purple Coneflower	1 Gal.	18" o.c.	30
	EM	Eurybia macrophylla	Bigleaf Aster	1 Gal.	18" o.c.	17
	GM	Geranium maculatum	Spotted Geranium	1 Gal.	18" o.c.	7
	HR	Heuchera richardsonii	Prairie Alumroot	1 Gal.	18" o.c.	21
	LK	Liatris spicata 'Kobold'	Kobold Blazing Star	1 Gal.	18" o.c.	10
	PH	Penstemon digitalis 'Husker Red'	Husker Red Beardtongue	1 Gal.	18" o.c.	17
	RH	Rudbeckia hirta	Black-eyed Susan	1 Gal.	15" o.c.	16

0 5' 10' 20'
SCALE: 1" = 10'-0"

RVi
22 East Chicago Avenue
Suite 200a
Naperville, IL 60540
Tel: 312.634.2100
www.rvilanning.com

PREPARED FOR
CITY OF LAKE FOREST

800 N. FIELD DRIVE
LAKE FOREST, ILLINOIS 60045

CONSULTANTS

CIVIL ENGINEER
HEY AND ASSOCIATES, INC.
26575 W. COMMERCE DRIVE
SUITE 601
VOLO, ILLINOIS 60073
T 847.740.0888

ELECTRICAL ENGINEER
NOVA ENGINEERING, PC
2338 S. CLINE AVENUE
SCHERERVILLE, INDIANA 46375
T 219.865.3352

SOUTH PARK PHASE TWO

ISSUE FOR BID
150 S. MAYWOOD RD.
LAKE FOREST, ILLINOIS 60045

PROJECT NO:	26000793
DATE:	10/28/2026
DRAWN:	MDB/AMM
REVIEWED:	LJL

OCTOBER 28, 2026
REVISIONS:

NO.	DATE	ISSUE
1	11/11/2026	ADDENDUM 03

PLANTING PLAN - ENLARGEMENT

L4.2

01_ORIGINAL ISSUE

L:\2026\26000793 south park ph2\05 production\03 CD\01 current plans\L4.0 Planting Plan.dwg 11/11/2026 mirandi berger

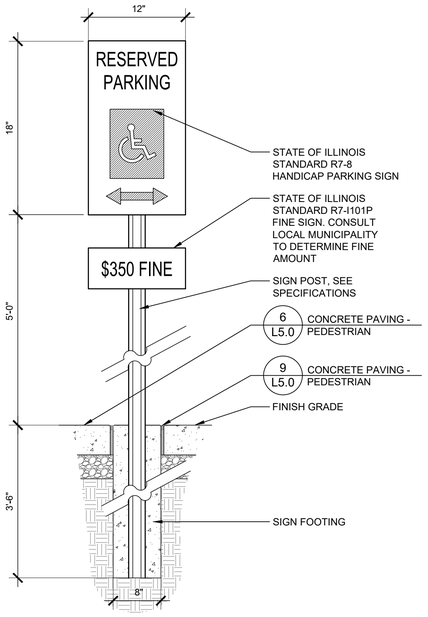

6 ADA PARKING SIGN

N.T.S.

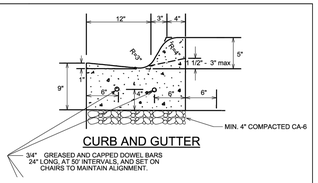

CURB AND GUTTER

3/4" GREASED AND CAPPED DOWEL BARS 24" LONG, AT 50' INTERVALS, AND SET ON CHAIRS TO MAINTAIN ALIGNMENT.

1. INSTALL PREFORMED EXPANSION JOINT FILLER, BITUMEN TREATED, CUT TO SHAPE OF CURB AND GUTTER, BARRIER CURB OR INTEGRAL CURB, AT 50' INTERVALS.
2. SAWCUT CONTRACTION JOINTS AT 25' INTERVALS
3. TWO (2) 10 FEET LONG NO. 4 RE-BARS OVER ALL TRENCHES
4. TWO CONTINUOUS NO.4 RE-BARS ARE TO BE INSTALLED IN ALL BARRIER CURB.
5. TWO (2) 24 INCH LONG NO. 4 DOWEL BARS AT ALL CONNECTIONS BETWEEN NEW CURB AND EXISTING CURB AND AT ALL EXPANSION JOINTS.
6. CONTRACTOR MUST CALL FOR AN INSPECTION PRIOR TO POURING THE CURB.

STANDARD CURB SECTIONS

LAKE FOREST STANDARD 2.06
APPROVED BY : KMM
DATE : 1/1/2006
G:\Engineer\Standard Details\Standard Curb 2-06

3 CURB AND GUTTER

N.T.S.

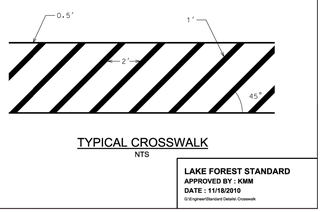

TYPICAL CROSSWALK

NTS

LAKE FOREST STANDARD
APPROVED BY : KMM
DATE : 11/18/2010
G:\Engineer\Standard Details\ Crosswalk

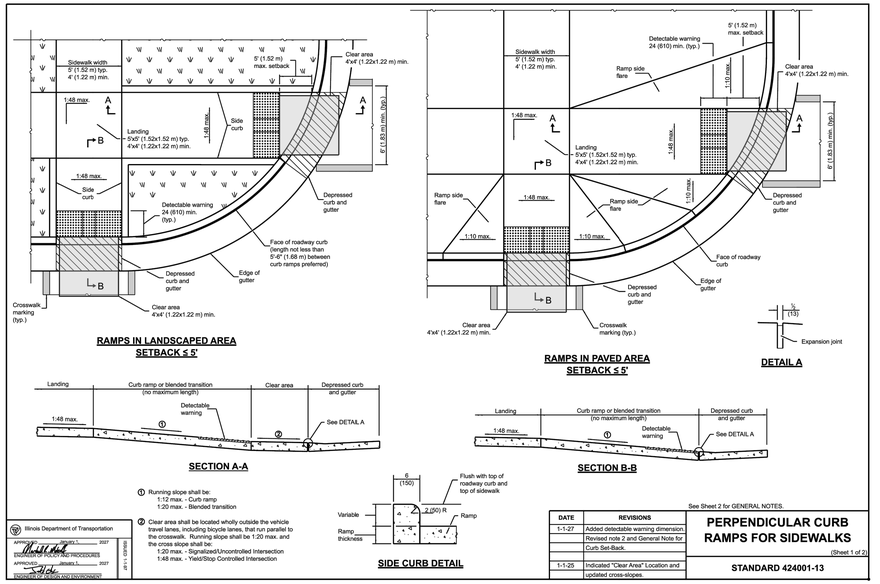

Illinois Department of Transportation
APPROVED _____ 2027
ENGINEER OF POLICY AND PROCEDURES
APPROVED January 1, 2027
ENGINEER OF BUREAU AND ENVIRONMENT
BRS 1 - 03/1/08

See Sheet 2 for GENERAL NOTES.

DATE	REVISIONS
1-1-27	Added detectable warning dimension.
	Revised note 2 and General Note for
	Curb Set-Back.
1-1-25	Indicated "Clear Area" Location and
	updated cross-slopes.

PERPENDICULAR CURB RAMPS FOR SIDEWALKS
(Sheet 1 of 2)
STANDARD 424001-13

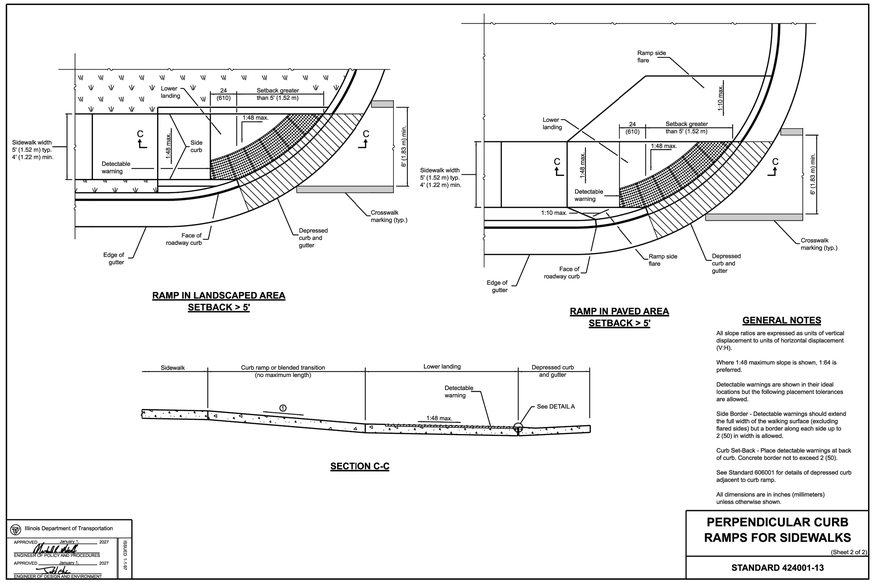

GENERAL NOTES

All slope ratios are expressed as units of vertical displacement to units of horizontal displacement (V:H).

Where 1:48 maximum slope is shown, 1:64 is preferred.

Detectable warnings are shown in their ideal locations but the following placement tolerances are allowed.

Side Border - Detectable warnings should extend the full width of the walking surface (excluding flared sides) but a border along each side up to 2 (50) in width is allowed.

Curb Set-Back - Place detectable warnings at back of curb. Concrete border not to exceed 2 (50).

See Standard 606001 for details of depressed curb adjacent to curb ramp.

All dimensions are in inches (millimeters) unless otherwise shown.

Illinois Department of Transportation
APPROVED _____ 2027
ENGINEER OF POLICY AND PROCEDURES
APPROVED January 1, 2027
ENGINEER OF BUREAU AND ENVIRONMENT
BRS 1 - 03/1/08

PERPENDICULAR CURB RAMPS FOR SIDEWALKS
(Sheet 2 of 2)
STANDARD 424001-13

1 CURB RAMP WITH DETECTABLE WARNING

N.T.S.

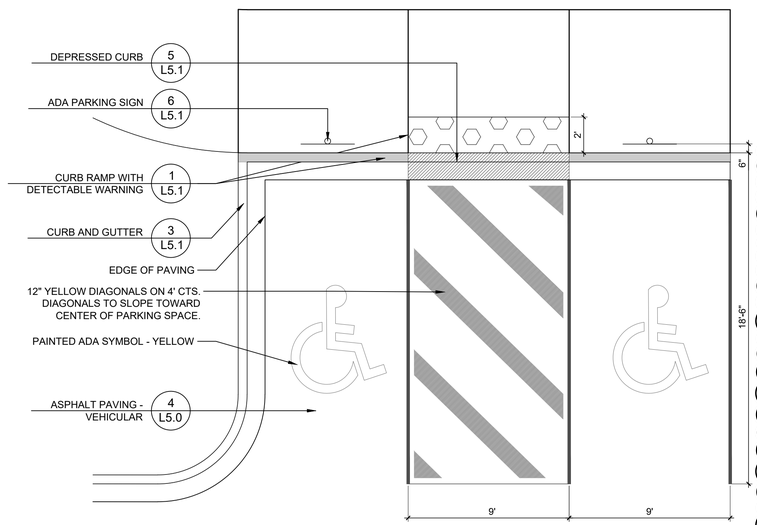

7 ADA PARKING MARKING LAYOUT

1/4" = 1'-0"

4 CROSSWALK STRIPING

N.T.S.

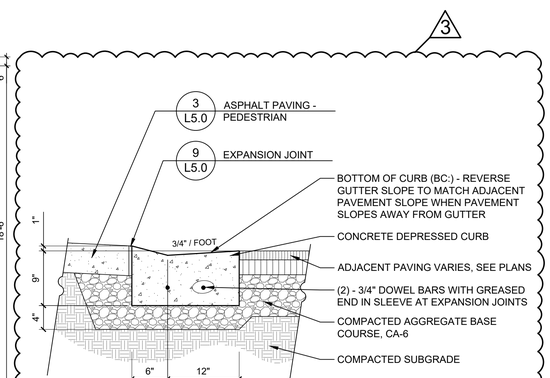

5 DEPRESSED CURB

1" = 1'-0"

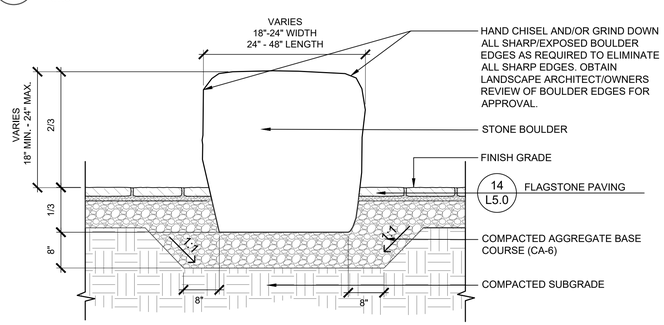

2 LIMESTONE BOULDERS AT SPLASHPAD

3/4" = 1'-0"

RVi
22 East Chicago Avenue
Suite 200a
Naperville, IL 60540
Tel: 312.634.2100
www.rvilplanning.com

PREPARED FOR
CITY OF LAKE FOREST

800 N. FIELD DRIVE
LAKE FOREST, ILLINOIS 60045

CONSULTANTS

CIVIL ENGINEER
HEY AND ASSOCIATES, INC.
26575 W. COMMERCE DRIVE
SUITE 601
VOLO, ILLINOIS 60073
T 847.740.0888

ELECTRICAL ENGINEER
NOVA ENGINEERING, PC
2338 S. CLINE AVENUE
SCHERERVILLE, INDIANA 46375
T 219.865.3352

SOUTH PARK PHASE TWO

ISSUE FOR BID
150 S. MAYWOOD RD.
LAKE FOREST, ILLINOIS 60045

PROJECT NO:	26000793
DATE:	10/28/2026
DRAWN:	MDB/AMM
REVIEWED:	LJL

OCTOBER 28, 2026
REVISIONS:

NO.	DATE	ISSUE
1	11/11/2026	ADDENDUM 03

DETAILS

L5.1

01_ORIGINAL ISSUE

L:\2026\26000793 south park ph2\05 production\03 CD\01 current plans\L5.0 Details.dwg 11/11/2026 mirandi berger

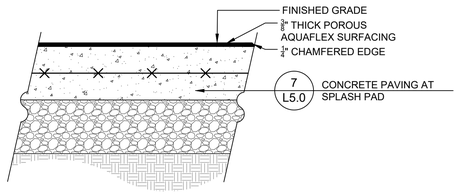

7 AQUAFLEX SURFACING AT SPLASH PAD

1 1/2" = 1'-0"

NOTE: SEE CIVIL DRAWINGS FOR GRADING AND SPOT ELEVATIONS ON LIMESTONE OUTCROPPING STONE

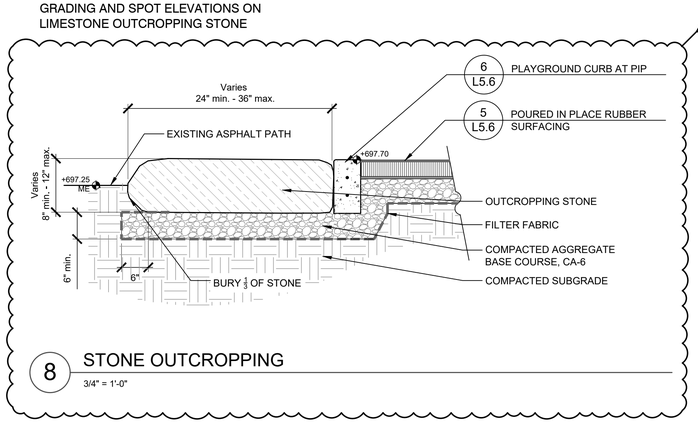

8 STONE OUTCROPPING

3/4" = 1'-0"

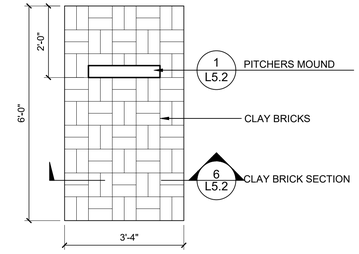

5 CLAY BRICK PITCHER'S PLATE

1/2" = 1'-0"

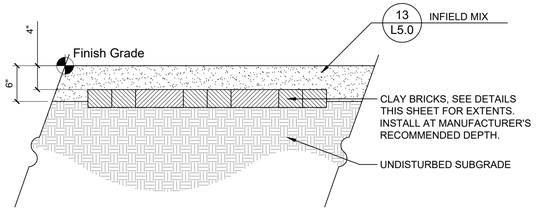

6 CLAY BRICK SECTION

1" = 1'-0"

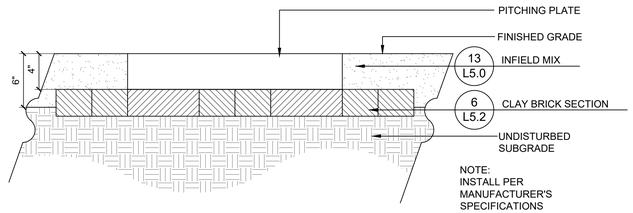

1 PITCHERS MOUND

1/8" = 1'-0"

NOTE:
1. INSTALL PER MANUFACTURER'S SPECIFICATIONS
2. PROVIDE CAPS FOR ALL BASES, ANCHORS, AND SLEEVES.

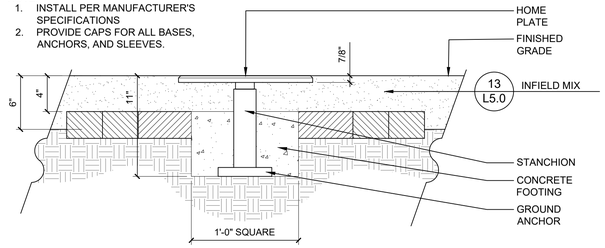

2 HOME PLATE

1/8" = 1'-0"

NOTE:
1. INSTALL PER MANUFACTURER'S SPECIFICATIONS.
2. PROVIDE CAPS FOR ALL BASES, ANCHORS, AND SLEEVES.

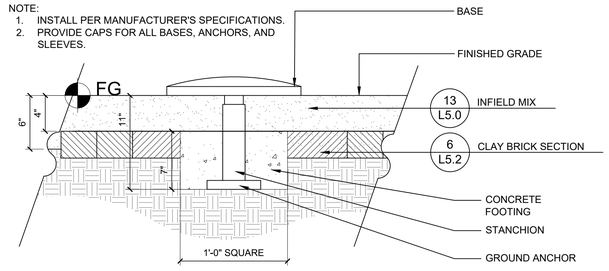

3 INFIELD BASES

1/8" = 1'-0"

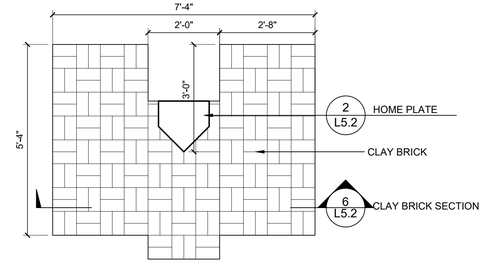

4 CLAY BRICK BATTER'S BOX

1/2" = 1'-0"

SPLASH PAD AREA: 941 SQ FT.
APRON AREA: 630 SQ. FT.
TOTAL AREA: 1,571 SQ FT.
TOTAL FEATURE FLOW RATE: 54 GPM.

NO.	PRODUCT	QTY	LINE SIZE	GPM
1	FLORASWIRL	1	1"	5
2	GEOMISTER SMALL	2	1 1/2" EA	2EA
3	HYDROSPHERE	2	1" EA	5EA
4	MINI FLASHFLOOD	1	1 1/2"	10
5	RIPPLERUN MEDIUM W/ACRYLIC	1	1"	10
6	SPRAYSTACKER	1	1 1/2"	15
7	HYDROLOGIX®	1	N/A	N/A
8	SPLASH PAD USER SIGN	1	N/A	N/A

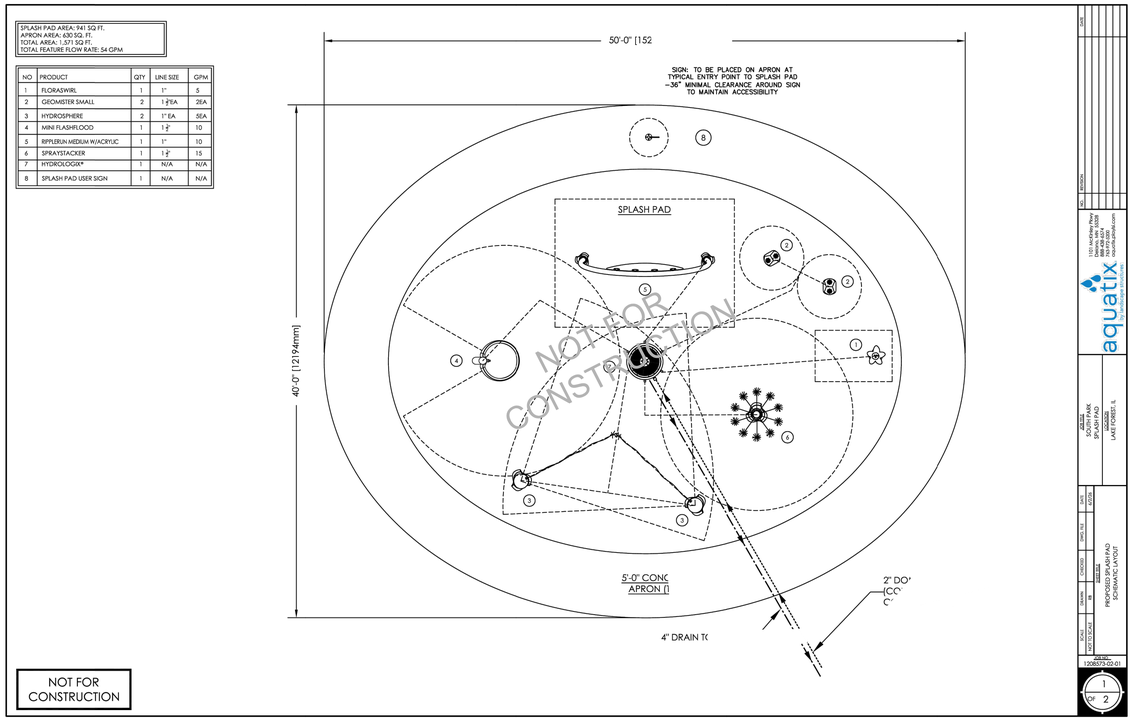

9 SPLASH PAD DIAGRAM

N.T.S

RVi
22 East Chicago Avenue
Suite 200a
Naperville, IL 60540
Tel: 312.634.2100
www.rviplanning.com

PREPARED FOR

CITY OF LAKE FOREST

800 N. FIELD DRIVE
LAKE FOREST, ILLINOIS 60045

CONSULTANTS

CIVIL ENGINEER
HEY AND ASSOCIATES, INC.
26575 W. COMMERCE DRIVE
SUITE 601
VOLO, ILLINOIS 60073
T 847.740.0888

ELECTRICAL ENGINEER
NOVA ENGINEERING, PC
2338 S. CLINE AVENUE
SCHERERVILLE, INDIANA 46375
T 219.865.3352

SOUTH PARK PHASE TWO

ISSUE FOR BID
150 S. MAYWOOD RD.
LAKE FOREST, ILLINOIS 60045

PROJECT NO:	26000793
DATE:	10/28/2026
DRAWN:	MDB/AMM
REVIEWED:	LJL

OCTOBER 28, 2026
REVISIONS:

NO.	DATE	ISSUE
1	11/11/2026	ADDENDUM 03

DETAILS

L5.2

01_ORIGINAL ISSUE

L:\2026\26000793 south park ph2\05 production\03 CD\01 current plans\L5.0 Details.dwg 11/11/2026 miranci berger

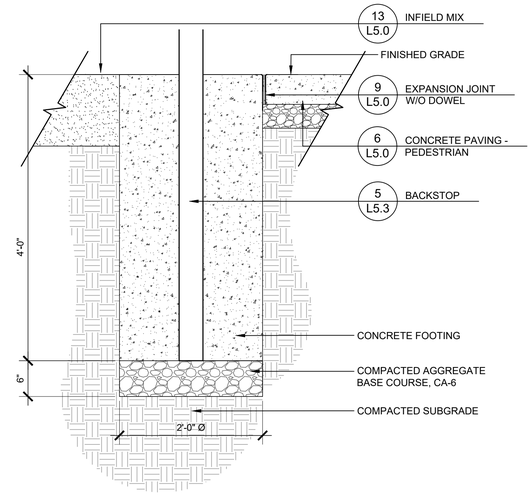

1 BACKSTOP FOOTING

1" = 1'-0"

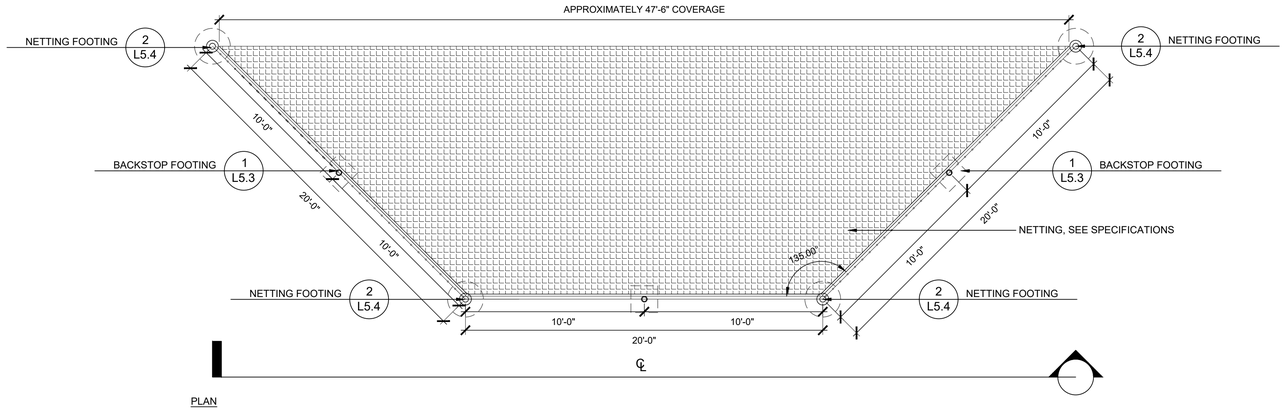

PLAN

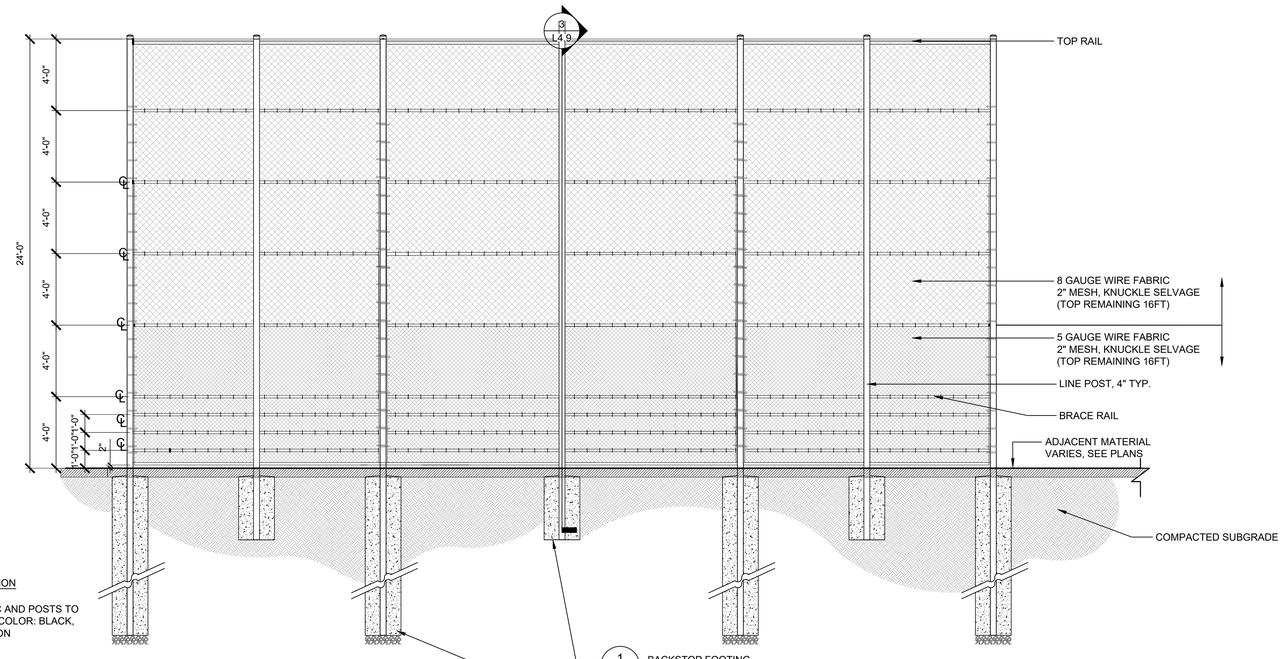

ELEVATION/SECTION

NOTE: ALL FABRIC AND POSTS TO BE PVC COATED, COLOR: BLACK, SEE SPECIFICATION

5 BACKSTOP

1/4" = 1'-0"

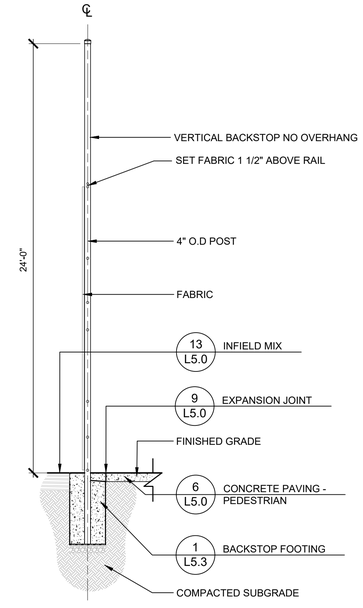

NOTE: ALL BACKSTOP POSTS AND CHAIN LINK FABRIC TO BE PVC COATED, COLOR: BLACK SEE SPECIFICATIONS

FENCE SCHEDULE

FENCE TYPE	HEIGHT	MID RAIL HEIGHT	FABRIC (HEIGHT/GAUGE, MESH)	FABRIC SELVAGE (TOP AND BOTTOM)	FOOTING DEPTH	FOOTING DIAMETER	CORNER/ END POSTS	LINE POSTS	POST SPACING	TOP RAIL	BRACE RAIL	BOTTOM RAIL	TRUSS ROD W/ TURNBUCKLE	TENSION WIRE	PVC COATED	POST CAP
BACKSTOP	24'-0"	N/A	2" MESH 8GA./ 5GA.	KNUCKLE	48"	2'-0"	8"	4"	10'-0"	1 5/8"	1 5/8"	1 5/8"	N/A	N/A	BLACK	DOME

RVi
22 East Chicago Avenue
Suite 200a
Naperville, IL 60540
Tel: 312.634.2100
www.rviplanning.com

PREPARED FOR

CITY OF LAKE FOREST

800 N. FIELD DRIVE
LAKE FOREST, ILLINOIS 60045

CONSULTANTS

CIVIL ENGINEER
HEY AND ASSOCIATES, INC.
26575 W. COMMERCE DRIVE
SUITE 601
VOLO, ILLINOIS 60073
T 847.740.0888

ELECTRICAL ENGINEER
NOVA ENGINEERING, PC
2338 S. CLINE AVENUE
SCHERERVILLE, INDIANA 46375
T 219.865.3352

SOUTH PARK PHASE TWO

ISSUE FOR BID
150 S. MAYWOOD RD.
LAKE FOREST, ILLINOIS 60045

PROJECT NO:	26000793
DATE:	10/28/2026
DRAWN:	MDB/AMM
REVIEWED:	LJL

OCTOBER 28, 2026

REVISIONS:

NO.	DATE	ISSUE
1	11/11/2026	ADDENDUM 03

DETAILS

L5.3

01_ORIGINAL ISSUE

L:\2026\26000793 south park ph2\05 production\03 CD\01 current plans\L5.0 Details.dwg 11/11/2026 mirandi berger

FENCE SCHEDULE

FENCE TYPE	HEIGHT	MID RAIL HEIGHT	FABRIC (HEIGHT/GAUGE, MESH)	FABRIC SELVAGE (TOP AND BOTTOM)	FOOTING DEPTH	FOOTING DIAMETER	TERMINAL POSTS	LINE POSTS	POST SPACING	TOP RAIL	MID RAIL	BOTTOM RAIL	TRUSS ROD W/ TURNBUCKLE	TENSION WIRE	PVC COATED	POST CAP
LINE FENCE	10'-0"OR TO UNDERSIDE OF DUGOUT ROOF SEE SHEET L5.5	MIDPOINT	8GA. / 2"	KNUCKLE	48"	12"	2 3/8"	2 3/8"	MAX 8'-0" O.C.	1.66"	1.66"	1.66"	N/A	N/A	BLACK	DOME

NOTE:
1. PVC COATED, BLACK
2. FENCE FABRIC TO BE EXTERIOR FACING

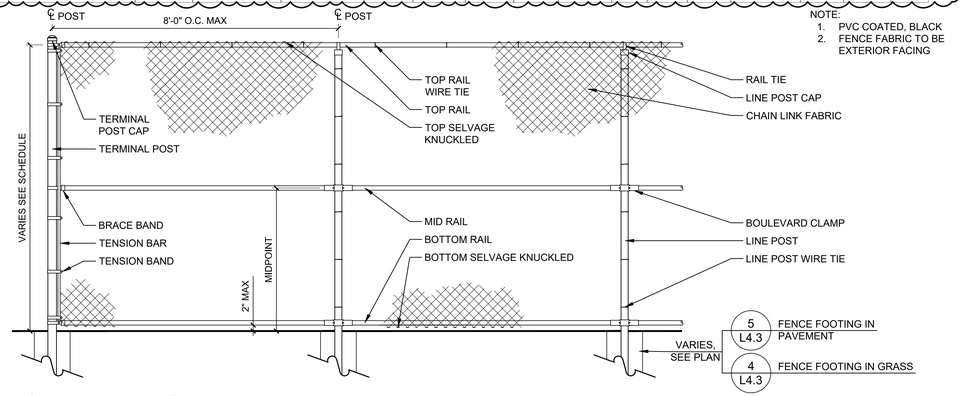

3 CHAIN LINK FENCE

1/2" = 1'-0"

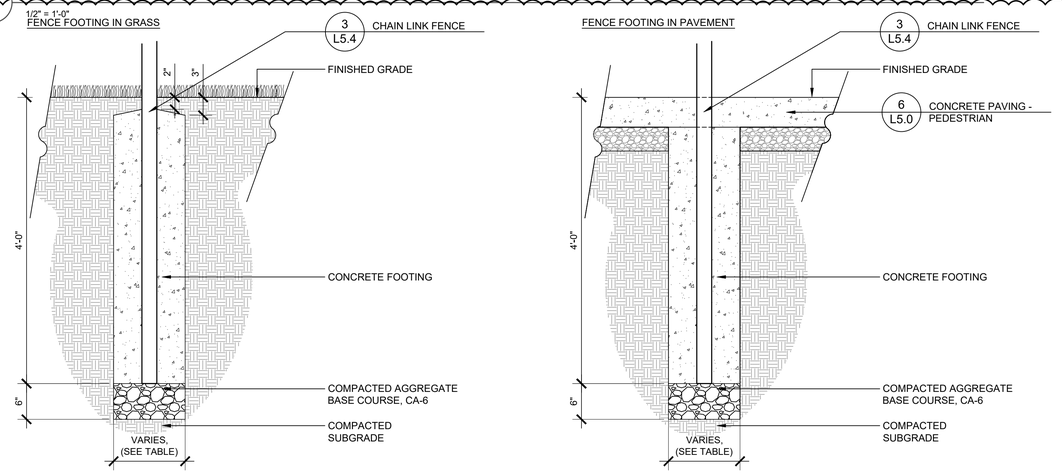

4 CHAINLINK FENCE FOOTING

1" = 1'-0"

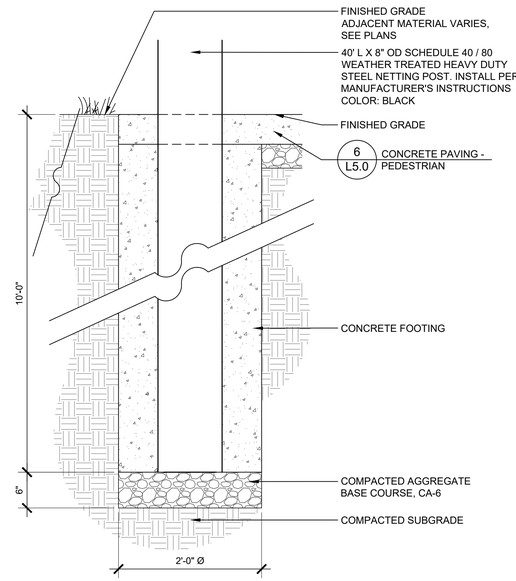

2 NETTING FOOTING

1" = 1'-0"

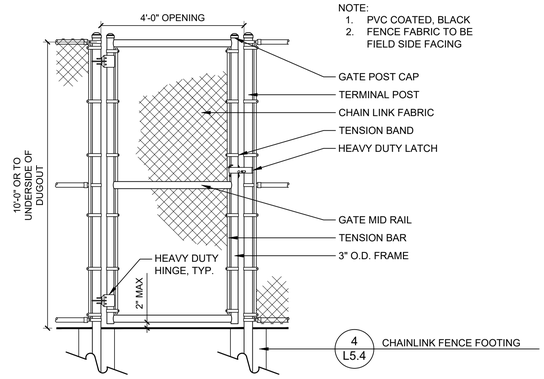

1 SINGLE SWING GATE

1/2" = 1'-0"

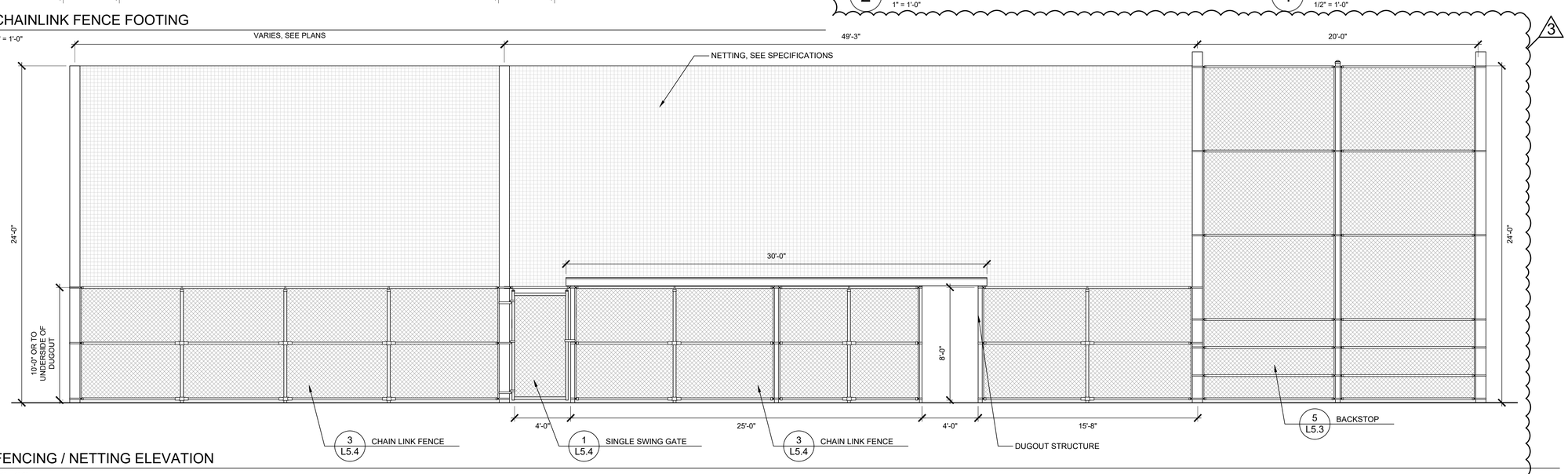

5 FENCING / NETTING ELEVATION

1/4" = 1'-0"

RVi
22 East Chicago Avenue
Suite 200a
Naperville, IL 60540
Tel: 312.634.2100
www.rviplanning.com

PREPARED FOR

CITY OF LAKE FOREST

800 N. FIELD DRIVE
LAKE FOREST, ILLINOIS 60045

CONSULTANTS

CIVIL ENGINEER
HEY AND ASSOCIATES, INC.
26575 W. COMMERCE DRIVE
SUITE 601
VOLO, ILLINOIS 60073
T 847.740.0888

ELECTRICAL ENGINEER
NOVA ENGINEERING, PC
2338 S. CLINE AVENUE
SCHERERVILLE, INDIANA 46375
T 219.865.3352

SOUTH PARK PHASE TWO

ISSUE FOR BID
150 S. MAYWOOD RD.
LAKE FOREST, ILLINOIS 60045

PROJECT NO:	26000793
DATE:	10/28/2026
DRAWN:	MDB/AMM
REVIEWED:	LJL

OCTOBER 28, 2026

REVISIONS:

NO.	DATE	ISSUE
3	11/11/2026	ADDENDUM 03

DETAILS

L5.4

01_ORIGINAL ISSUE

L:\2026\26000793 south park ph2\05 production\03 CD\01 current plans\L5.0 Details.dwg 11/11/2026 mirandi berger

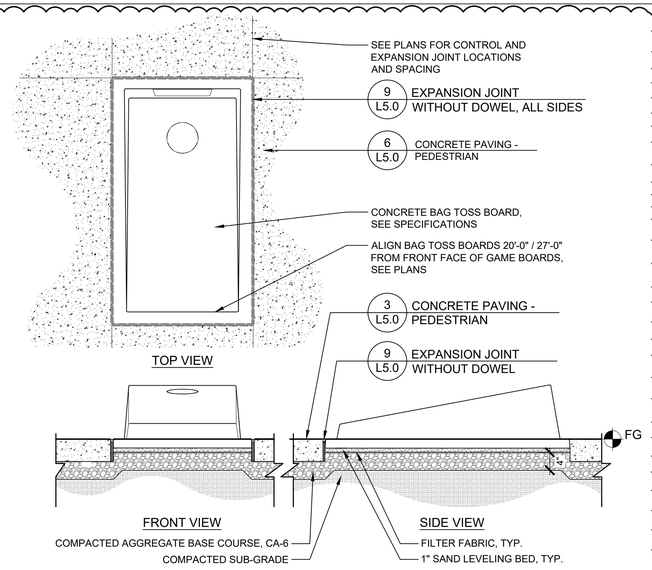

3

6 BAG TOSS BOARDS

3/4" = 1'-0"

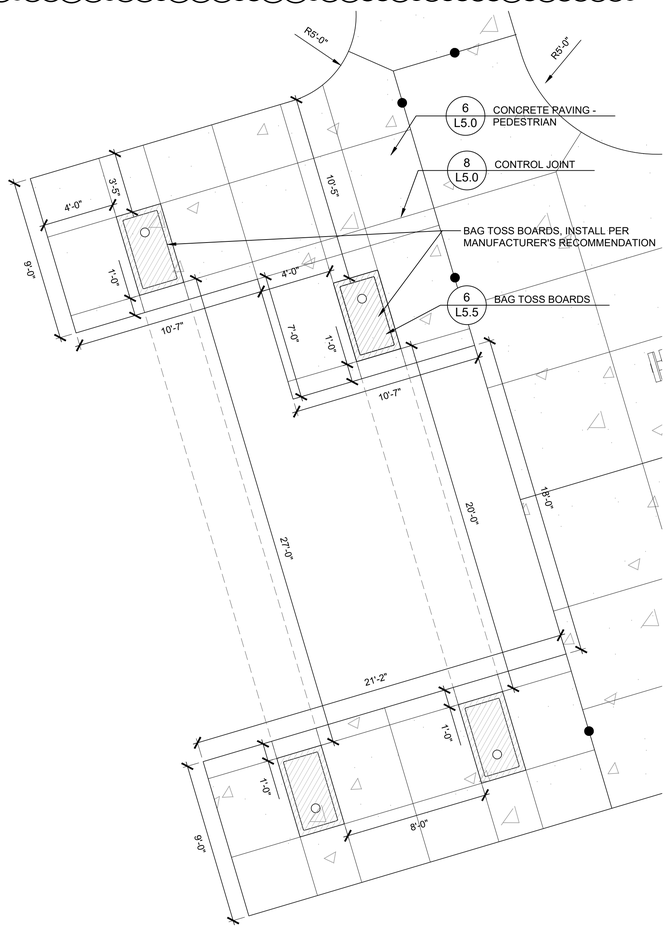

7 BAG TOSS LAYOUT

1/4" = 1'-0"

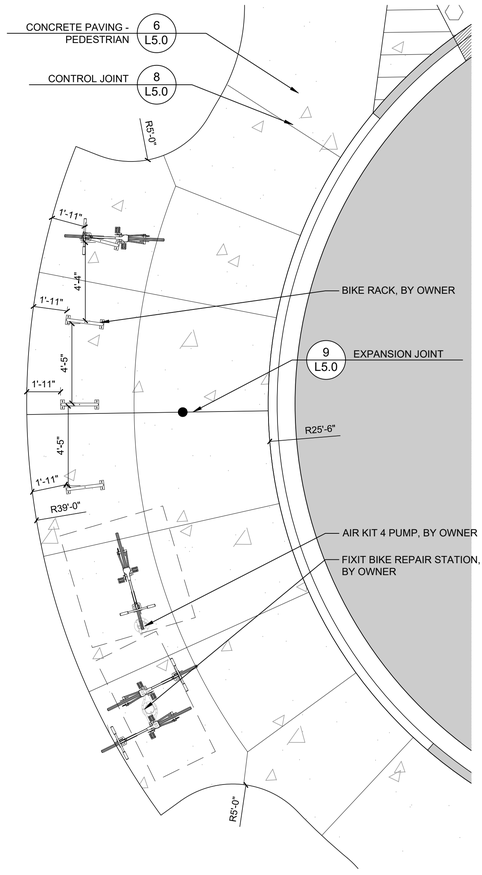

4 BIKE RACK AND REPAIR STATION ENLARGEMENT

1/4" = 1'-0"

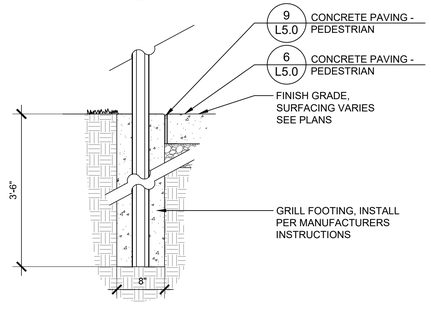

5 GRILL FOOTING

1/8"=1'-0"

3

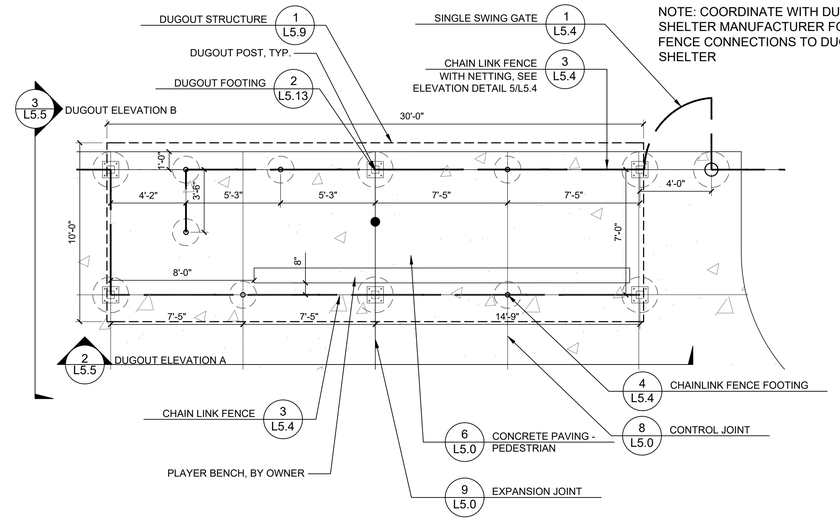

1 DUGOUT ENLARGEMENT

1/4" = 1'-0"

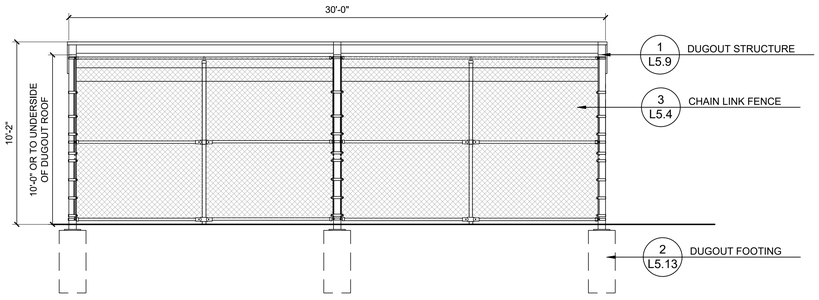

NOTE:
1. CONFIRM FENCE HEIGHTS WITH INSTALLED DUGOUT STRUCTURE TO ENSURE NO GAP IS LARGER THAN 4" MAXIMUM
2. ATTACH FENCING TO DUGOUT POSTS, COORDINATE WITH MANUFACTURER AND DUGOUT CONTRACTOR

2 DUGOUT ELEVATION A

1/4" = 1'-0"

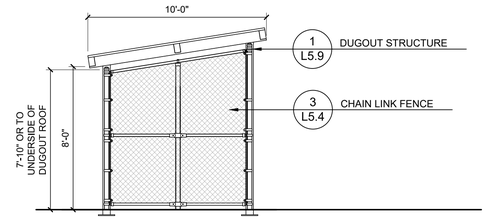

NOTE:
1. CONFIRM FENCE HEIGHTS WITH INSTALLED DUGOUT STRUCTURE TO ENSURE NO GAP IS LARGER THAN 4" MAXIMUM
2. ATTACH FENCING TO DUGOUT POSTS, COORDINATE WITH MANUFACTURER AND DUGOUT CONTRACTOR

3 DUGOUT ELEVATION B

1/4" = 1'-0"

RVi
22 East Chicago Avenue
Suite 200a
Naperville, IL 60540
Tel: 312.634.2100
www.rviplanning.com

PREPARED FOR

CITY OF LAKE FOREST

800 N. FIELD DRIVE
LAKE FOREST, ILLINOIS 60045

CONSULTANTS

CIVIL ENGINEER
HEY AND ASSOCIATES, INC.
26575 W. COMMERCE DRIVE
SUITE 601
VOLO, ILLINOIS 60073
T 847.740.0888

ELECTRICAL ENGINEER
NOVA ENGINEERING, PC
2338 S. CLINE AVENUE
SCHERERVILLE, INDIANA 46375
T 219.865.3352

SOUTH PARK PHASE TWO

ISSUE FOR BID
150 S. MAYWOOD RD.
LAKE FOREST, ILLINOIS 60045

PROJECT NO:	26000793
DATE:	10/28/2026
DRAWN:	MDB/AMM
REVIEWED:	LJL

OCTOBER 28, 2026

REVISIONS:

NO.	DATE	ISSUE
1	11/11/2026	ADDENDUM 03

DETAILS

L5.5

01_ORIGINAL ISSUE

L:\2026\26000793 south park ph2\05 production\03 CD\01 current plans\L5.0 Details.dwg 11/11/2026 miranda.berger

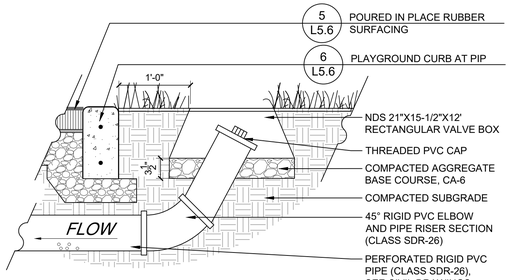

7 PLAYGROUND CLEANOUT AT POURED IN PLACE

1" = 1'-0"

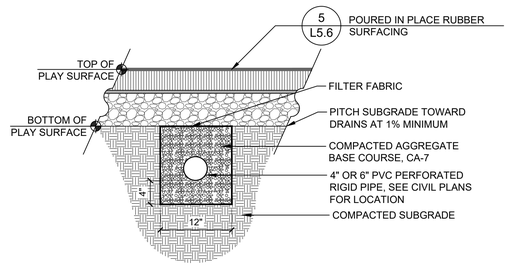

8 PLAYGROUND UNDERDRAIN

1" = 1'-0"

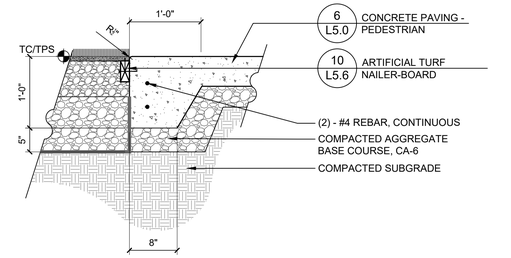

9 THICKENED EDGE CONCRETE PAVING AT ARTIFICIAL TURF

1" = 1'-0"

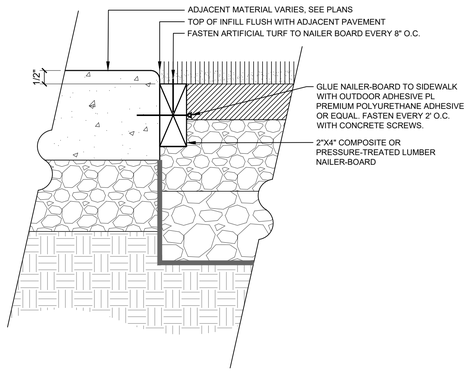

10 ARTIFICIAL TURF NAILER-BOARD

3" = 1'-0"

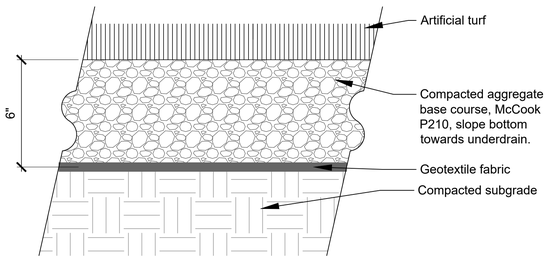

3 ARTIFICIAL TURF

3" = 1'-0"

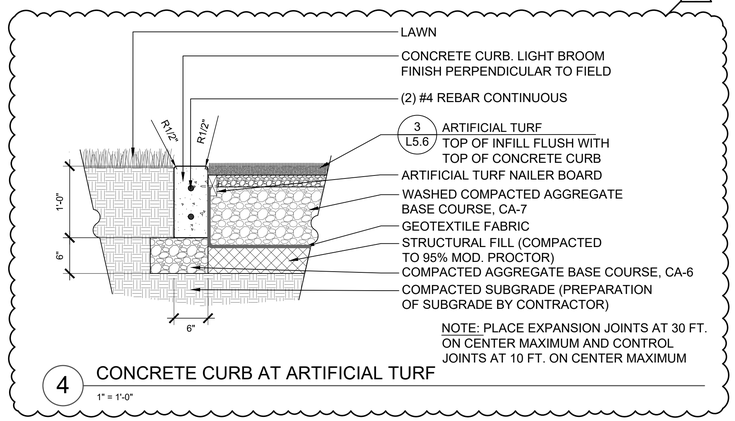

4 CONCRETE CURB AT ARTIFICIAL TURF

1" = 1'-0"

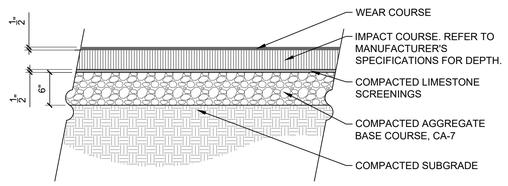

NOTES:
1. REFER TO MANUFACTURER'S INSTRUCTIONS FOR INSTALLATION.
2. STONE BASE AND SUBGRADE PITCHED AT 2% TOWARD UNDERDRAINS.

5 POURED IN PLACE RUBBER SURFACING

1" = 1'-0"

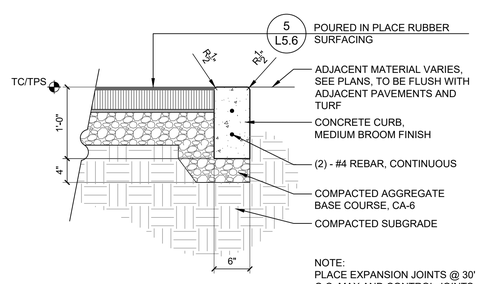

NOTE:
PLACE EXPANSION JOINTS @ 30' O.C. MAX AND CONTROL JOINTS @10' O.C. MAX

6 PLAYGROUND CURB AT PIP

1" = 1'-0"

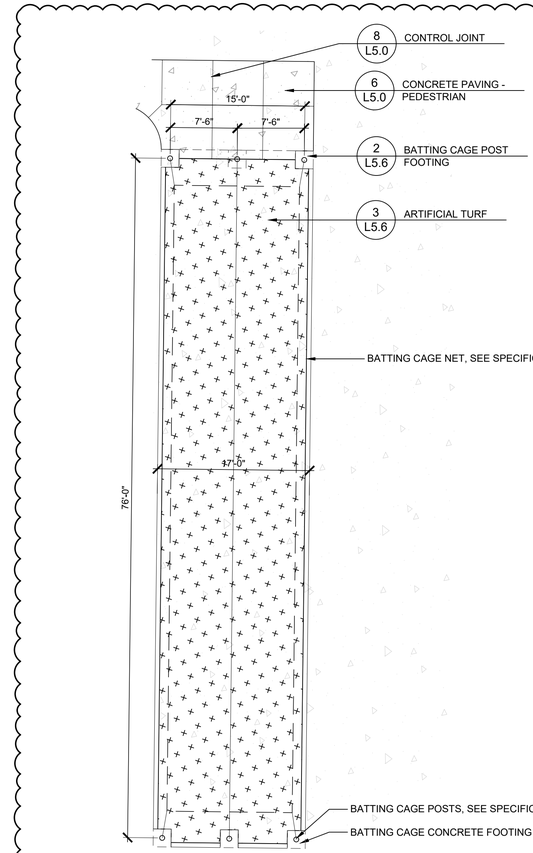

1 BATTING CAGE LAYOUT

1/8" = 1'-0"

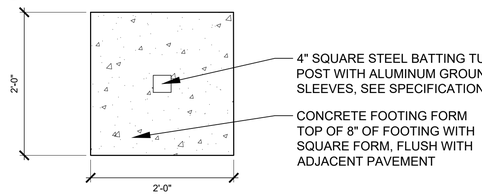

BATTING TUNNEL STEEL POST MOUNTING AT CONCRETE EDGE

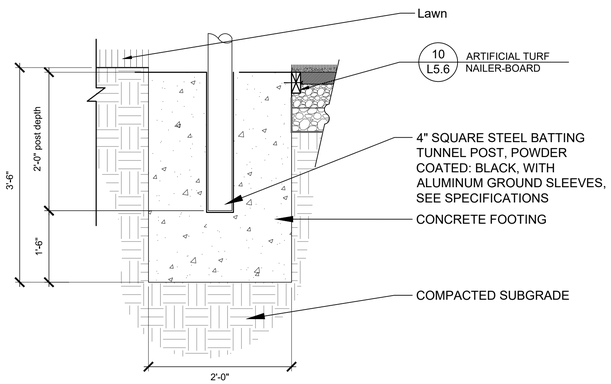

2 BATTING CAGE POST FOOTING

1" = 1'-0"

RVi
22 East Chicago Avenue
Suite 200a
Naperville, IL 60540
Tel: 312.634.2100
www.rvilanning.com

PREPARED FOR

CITY OF LAKE FOREST

800 N. FIELD DRIVE
LAKE FOREST, ILLINOIS 60045

CONSULTANTS

CIVIL ENGINEER
HEY AND ASSOCIATES, INC.
26575 W. COMMERCE DRIVE
SUITE 601
VOLO, ILLINOIS 60073
T 847.740.0888

ELECTRICAL ENGINEER
NOVA ENGINEERING, PC
2338 S. CLINE AVENUE
SCHERERVILLE, INDIANA 46375
T 219.865.3352

SOUTH PARK PHASE TWO

ISSUE FOR BID
150 S. MAYWOOD RD.
LAKE FOREST, ILLINOIS 60045

PROJECT NO:	26000793
DATE:	10/28/2026
DRAWN:	MDB/AMM
REVIEWED:	LJL

OCTOBER 28, 2026

REVISIONS:

NO.	DATE	ISSUE
1	11/11/2026	ADDENDUM 03

DETAILS

L5.6

01_ORIGINAL ISSUE

L:\2026\26000793 south park ph2\05 production\03 CD\01 current plans\L5.0 Details.dwg 11/11/2026 mirandi berger



SOIL EROSION AND SEDIMENT CONTROL NOTES

All soil erosion and sedimentation control measures shall be in accordance with the "Standard Specifications for Road and Bridge Construction", State of Illinois, Department of Transportation, adopted January 1, 2022. Unless otherwise indicated, all vegetative and structural erosion and sediment control practices will be constructed according to minimum standards and specifications in the Illinois Urban Manual revised June 2013.

1. Following are the Lake County Stormwater Management Commission's Soil Erosion and Sediment Control Construction Notes:

   A. Sediment control measures shall be installed prior to the commencement of hyrdologic disturbance of upland areas.

   B. For those developments that require a Designated Erosion Control Inspector (DECI), inspections and documentation shall be performed, at a minimum:
   - Upon completion of sediment and runoff control measures (including perimeter controls and diversions), prior to proceeding with any other earth disturbance or grading.
   - After every seven (7) calendar days or storm event with greater than 0.5 inch of rainfall or liquid equivalent precipitation.

   C. Soil disturbance shall be conducted in such a manner as to minimize erosion. If stripping, clearing, grading, or landscaping are to be done in phases, the permittee shall plan for appropriate soil erosion and sediment control measures.

   D. The existing parking lot entrance on S. Maywood Road shall be utilized for construction access. Should the existing entrance not be sufficient to prevent tracking onto adjacent roadways, a stabilized mat of crushed stone meeting IDOT gradation CA-1 underlain with filter fabric, and in accordance with the Illinois Urban Manual, or other appropriate measures(s) as approved by the Enforcement Officer, shall be installed. Sediment or soil is not alllowed on the adjacent pavement and shall be removed by scraping or street cleaning and transported to a controlled sediment disposal area.

   E. Temporary diversions shall be constructed as necessary to direct all runoff from hydrologically disturbed areas to an appropriate sediment trap or basin.

   F. Disturbed areas shall be stabilized with temporary or permanent measures within seven (7) calendar days following the end of active hydrologic disturbance or redisturbance.

   G. All stockpiles shall have appropriate measures to prevent erosion. Stockpiles shall not be placed in flood prone areas or wetlands and designated buffers.

   H. Slopes steeper than 3H:1V shall be stabilized with appropriate measures as approved by the Enforcement Officer.

   I. Appropriate erosion control blanket shall be installed on all interior detention basin side slopes between the normal water level and high water level.

   J. Storm sewers that are or will be functioning during construction shall be protected by an appropriate sediment control measure.

   K. If dewatering services are used, adjoining properties and discharge locations shall be protected from erosion and sedimentation. Discharges shall be routed through an approved anionic polymer dewatering system or a similar measure as approved by the Enforcement Officer. Dewatering systems should be inspected daily during operational periods. The Enforcement Officer, or approved representative, must be present at the commencement of dewatering activities.

   L. If installed soil erosion and sediment control measures do not minimize sediment leaving the development site, additional measures such as anionic polymers or filtration systems may be required by the Enforcement Officer.

   M. All temporary and permanent erosion control measures must be maintained and repaired as needed. The property owner shall be ultimately responsible for maintenance and repair.

   N. All temporary sediment control measures shall be removed within 30 days after final site stabilization is achieved or after the temporary measures are no longer needed.

   O. The erosion control measures indicated on the plans are the minimum requirements. Additional measures may be required, as directed by the Engineer, Enforcement Officer, or other governing agency.

2. Quantities are for convenience of the Owner. Contractor shall install SESC measures as shown on the plan.

SESC LEGEND

- WL — Ex Wetland Boundary
- Ex Major Contour (5 foot)
- Ex Minor Contour (1 foot)
- 680 — Prop Major Contour (5 foot)
- 679 — Prop Minor Contour (1 foot)
- PEB — Perimeter Erosion Barrier
- Inlet Protection

0 30' 60' 120'
SCALE: 1" = 60'-0"

RVi
22 East Chicago Avenue
Suite 200a
Naperville, IL 60540
Tel: 312.634.2100
www.rvilanning.com

PREPARED FOR
CITY OF LAKE FOREST

800 N. FIELD DRIVE
LAKE FOREST, ILLINOIS 60045

CONSULTANTS

CIVIL ENGINEER
HEY AND ASSOCIATES, INC.
26575 W. COMMERCE DRIVE
SUITE 601
VOLO, ILLINOIS 60073
T 847.740.0888

ELECTRICAL ENGINEER
NOVA ENGINEERING, PC
2338 S. CLINE AVENUE
SCHERERVILLE, INDIANA 46375
T 219.865.3352

SOUTH PARK PHASE TWO

ISSUE FOR BID
150 S. MAYWOOD RD.
LAKE FOREST, ILLINOIS 60045

PROJECT NO:	26000793
DATE:	10/28/2026
DRAWN:	BCB/BEG
REVIEWED:	CTM

OCTOBER 28, 2026
REVISIONS:

NO.	DATE	ISSUE
3	11/11/2026	ADDENDUM #3

SESC PLAN

C1.0

01_ORIGINAL ISSUE

E:\Projects\26-0075 RVI - South Park Improvements\05 CAD\26-0075 RVI South Park.dwg 11/11/2026 corey mase



GRADING LEGEND

- Ex Wetland Boundary
- Ex Major Contour (5 foot)
- Ex Minor Contour (1 foot)
- Prop Major Contour (5 foot)
- Prop Minor Contour (1 foot)
- Prop Storm Sewer
- Prop Storm Underdrain
- Spot Elevation
- Top of Curb Spot Elevation
- Match Existing
- Drainage Arrow
- Prop Cleanout
- Prop Catch Basin
- Prop Storm Manhole
- Prop Flared End Section

GRADING AND DRAINAGE NOTES

All work done under this heading will be done in accordance with applicable provisions of the "Standard Specifications for Road and Bridge Construction", State of Illinois, Department of Transportation, adopted January 1, 2026, and revisions thereto, the "Standard Specifications for Water and Sewer Construction in Illinois", latest edition, the City of Lake Forest codes and regulations, the project notes and specifications.

1. Work under this section shall include, but not be limited to, the following:
   a. Clearing and removal of all undesirable vegetative growth within the construction area except as noted otherwise on the plans.
   b. Removing unsuitable materials as specified from paved and playground areas and other designated areas.
   c. Clay cut and clay fill with compaction within paved and playground areas and other designated areas.
   d. Excavation and grading of the entire site per plan, including construction of berms, swales, etc., as shown on these plans.
   e. Placement and construction of structural and non-structural fills.
   f. If required, removal from site and disposal of any excess or unsuitable material upon completion of mass grading.
   g. Movement and compaction of spoil material from the construction of underground utilities.
   h. Final shaping and trimming to the lines, grades and cross-sections shown in these plans, and topsoil placement to design finish grade elevations.
   i. Soil erosion control measures in accordance with the applicable specifications and county requirements.
2. Silt fence and perimeter erosion barrier as shown in the construction plans shall be erected prior to mass earthwork.
3. It is the Contractor's responsibility to determine all material quantities and apprise themself of all site conditions. No claims for extra work will be recognized unless ordered in writing by the Owner.
4. The grading operations are to be closely supervised and inspected, particularly during the removal of unsuitable material and the construction of embankments, by the geotechnical engineer or his representative. All testing, inspection and supervision of soil quality, unsuitable removal and its replacement, and other soils related operations shall be entirely the responsibility of the geotechnical engineer.
5. The grading and construction of the site improvements shall not cause ponding of stormwater except as noted on the plans. All areas adjacent to these improvements shall be graded to allow positive drainage.
6. The proposed grading elevations shown on the plans are finish grade unless otherwise noted. A minimum of six inches (6") of topsoil is to be placed before finish grade elevations are achieved, except where noted otherwise. Topsoil depth shall be increased as needed if on-site earth fill is not available and for construction of berms.
7. It is anticipated that topsoil and earth cuts and fills will balance on-site with no import or export needed. The Contractor shall notify the Owner and/or Engineer should it be determined prior to or during construction that the earthwork will not balance.
8. All disturbed areas to be restored according to the planting plan.
9. All disturbed areas shall be stabilized with NA Green S75 erosion control blanket, or approved equal, unless otherwise noted.
10. The Contractor is to locate all utilities, public and private, prior to beginning construction. Contractor will be responsible for any damages to utilities caused by their work. Contact J.U.L.I.E. 72 hours prior to construction at 1-800-982-0123 or (811) for location of utilities and contractor shall be responsible for protection of the same.
11. The Contractor shall notify the Architect or Engineer if existing utility lines of any nature are encountered that conflict in location with new construction so that the conflict may be resolved.
12. The Contractor shall be responsible for the protection of all public and private utilities even though they may not be shown on the plans. Any utility damaged during construction shall be repaired or replaced to the satisfaction of the Owner and the Contractor's expense.
13. The Contractor shall be required to make arrangements for the proper bracing, shoring and other required protection of all roadways, structures, poles, cables and pipe lines before construction begins. He shall be responsible for any damage to the streets or roadways and associated structures and shall make repairs as necessary to the satisfaction of the Owner at his own expense.
14. The Contractor shall confirm the location (horizontal and vertical) of all utility pipes and structures to which a new connection is being made prior to constructing the new pipe. He shall notify the Architect or Engineer should any discrepancy be found between the location shown on the plans and the location determined in the field.

0 10' 20' 40'
SCALE: 1" = 20'-0"

RVi
22 East Chicago Avenue
Suite 200a
Naperville, IL 60540
Tel: 312.634.2100
www.rviplanning.com

PREPARED FOR
CITY OF LAKE FOREST

800 N. FIELD DRIVE
LAKE FOREST, ILLINOIS 60045

CONSULTANTS

CIVIL ENGINEER
HEY AND ASSOCIATES, INC.
26575 W. COMMERCE DRIVE
SUITE 601
VOLO, ILLINOIS 60073
T 847.740.0888

ELECTRICAL ENGINEER
NOVA ENGINEERING, PC
2338 S. CLINE AVENUE
SCHERERVILLE, INDIANA 46375
T 219.865.3352

SOUTH PARK PHASE TWO

ISSUE FOR BID
150 S. MAYWOOD RD.
LAKE FOREST, ILLINOIS 60045

PROJECT NO:	26000793
DATE:	10/28/2026
DRAWN:	BCB/BEG
REVIEWED:	CTM

OCTOBER 28, 2026
REVISIONS:

NO.	DATE	ISSUE
3	11/11/2026	ADDENDUM #3

GRADING AND DRAINAGE PLAN OVERALL

C2.0

01_ORIGINAL ISSUE

E:\Projects\26-0075 RVI - South Park Improvements\05 CAD\26-0075 RVI South Park.dwg 11/11/2026 corey mase

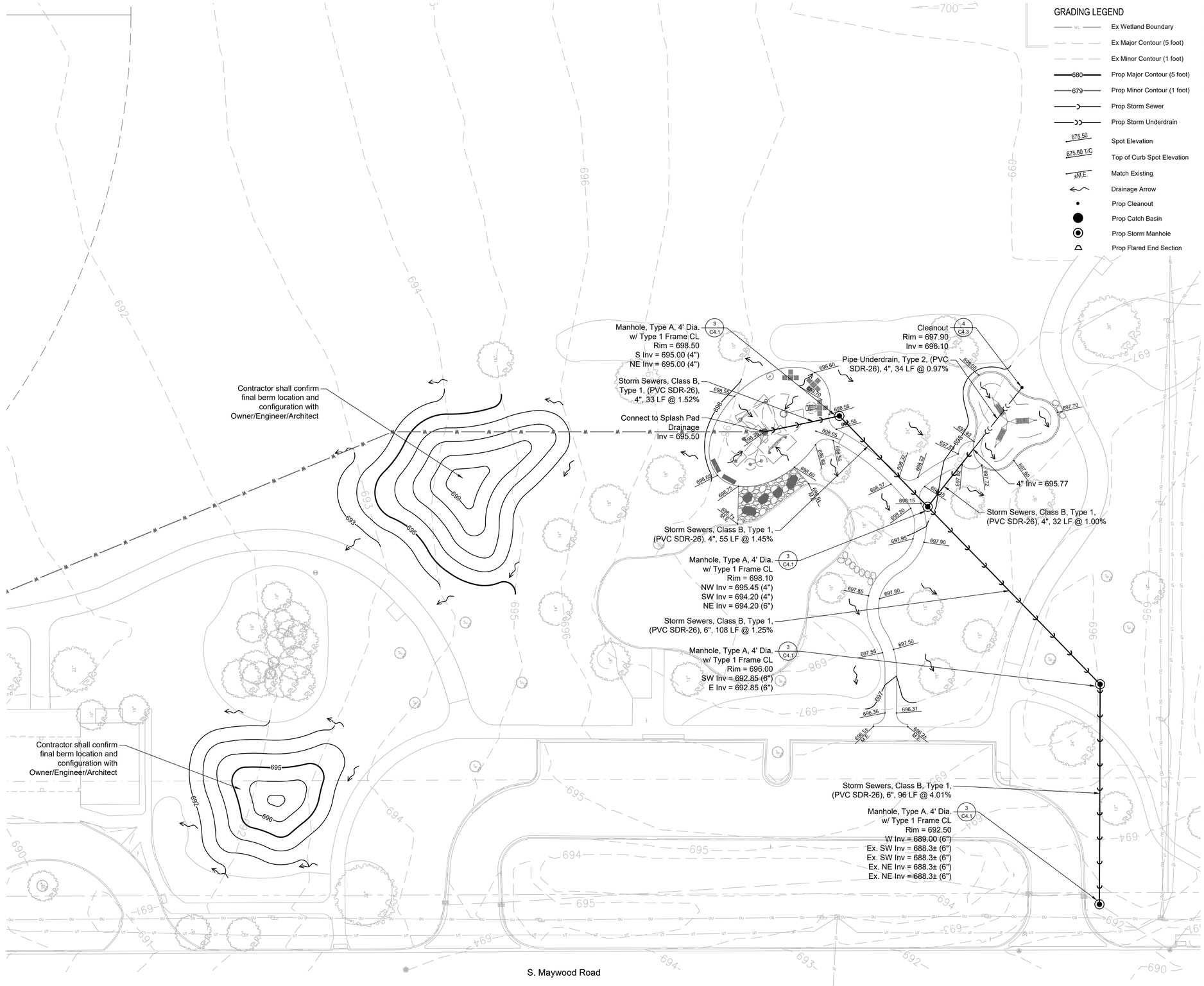

GRADING LEGEND

- Ex Wetland Boundary
- Ex Major Contour (5 foot)
- Ex Minor Contour (1 foot)
- 680 — Prop Major Contour (5 foot)
- 679 — Prop Minor Contour (1 foot)
- Prop Storm Sewer
- Prop Storm Underdrain
- 675.50 — Spot Elevation
- 675.50 T/C — Top of Curb Spot Elevation
- ±M.E. — Match Existing
- Drainage Arrow
- Prop Cleanout
- Prop Catch Basin
- Prop Storm Manhole
- Prop Flared End Section

GRADING AND DRAINAGE NOTES

All work done under this heading will be done in accordance with applicable provisions of the "Standard Specifications for Road and Bridge Construction", State of Illinois, Department of Transportation, adopted January 1, 2026, and revisions thereto, the "Standard Specifications for Water and Sewer Construction in Illinois", latest edition, the City of Lake Forest codes and regulations, the project notes and specifications.

1. Work under this section shall include, but not be limited to, the following:
   a. Clearing and removal of all undesirable vegetative growth within the construction area except as noted otherwise on the plans.
   b. Removing unsuitable materials as specified from paved and playground areas and other designated areas.
   c. Clay cut and clay fill with compaction within paved and playground areas and other designated areas.
   d. Excavation and grading of the entire site per plan, including construction of berms, swales, etc., as shown on these plans.
   e. Placement and construction of structural and non-structural fills.
   f. If required, removal from site and disposal of any excess or unsuitable material upon completion of mass grading.
   g. Movement and compaction of spoil material from the construction of underground utilities.
   h. Final shaping and trimming to the lines, grades and cross-sections shown in these plans, and topsoil placement to design finish grade elevations.
   i. Soil erosion control measures in accordance with the applicable specifications and county requirements.
2. Silt fence and perimeter erosion barrier as shown in the construction plans shall be erected prior to mass earthwork.
3. It is the Contractor's responsibility to determine all material quantities and apprise themself of all site conditions. No claims for extra work will be recognized unless ordered in writing by the Owner.
4. The grading operations are to be closely supervised and inspected, particularly during the removal of unsuitable material and the construction of embankments, by the geotechnical engineer or his representative. All testing, inspection and supervision of soil quality, unsuitable removal and its replacement, and other soils related operations shall be entirely the responsibility of the geotechnical engineer.
5. The grading and construction of the site improvements shall not cause ponding of stormwater except as noted on the plans. All areas adjacent to these improvements shall be graded to allow positive drainage.
6. The proposed grading elevations shown on the plans are finish grade unless otherwise noted. A minimum of six inches (6") of topsoil is to be placed before finish grade elevations are achieved, except where noted otherwise. Topsoil depth shall be increased as needed if on-site earth fill is not available and for construction of berms.
7. It is anticipated that topsoil and earth cuts and fills will balance on-site with no import or export needed. The Contractor shall notify the Owner and/or Engineer should it be determined prior to or during construction that the earthwork will not balance.
8. All disturbed areas to be restored according to the planting plan.
9. All disturbed areas shall be stabilized with NA Green S75 erosion control blanket, or approved equal, unless otherwise noted.
10. The Contractor is to locate all utilities, public and private, prior to beginning construction. Contractor will be responsible for any damages to utilities caused by their work. Contact J.U.L.I.E. 72 hours prior to construction at 1-800-982-0123 or (811) for location of utilities and contractor shall be responsible for protection of the same.
11. The Contractor shall notify the Architect or Engineer if existing utility lines of any nature are encountered that conflict in location with new construction so that the conflict may be resolved.
12. The Contractor shall be responsible for the protection of all public and private utilities even though they may not be shown on the plans. Any utility damaged during construction shall be repaired or replaced to the satisfaction of the Owner and the Contractor's expense.
13. The Contractor shall be required to make arrangements for the proper bracing, shoring and other required protection of all roadways, structures, poles, cables and pipe lines before construction begins. He shall be responsible for any damage to the streets or roadways and associated structures and shall make repairs as necessary to the satisfaction of the Owner at his own expense.
14. The Contractor shall confirm the location (horizontal and vertical) of all utility pipes and structures to which a new connection is being made prior to constructing the new pipe. He shall notify the Architect or Engineer should any discrepancy be found between the location shown on the plans and the location determined in the field.

RVi
22 East Chicago Avenue
Suite 200a
Naperville, IL 60540
Tel: 312.634.2100
www.rviplanning.com

PREPARED FOR

CITY OF LAKE FOREST

800 N. FIELD DRIVE
LAKE FOREST, ILLINOIS 60045

CONSULTANTS

CIVIL ENGINEER
HEY AND ASSOCIATES, INC.
26575 W. COMMERCE DRIVE
SUITE 601
VOLO, ILLINOIS 60073
T 847.740.0888

ELECTRICAL ENGINEER
NOVA ENGINEERING, PC
2338 S. CLINE AVENUE
SCHERERVILLE, INDIANA 46375
T 219.865.3352

SOUTH PARK PHASE TWO

ISSUE FOR BID
150 S. MAYWOOD RD.
LAKE FOREST, ILLINOIS 60045

PROJECT NO:	26000793
DATE:	10/28/2026
DRAWN:	BCB/BEG
REVIEWED:	CTM

OCTOBER 28, 2026

REVISIONS:

NO.	DATE	ISSUE
3	11/11/2026	ADDENDUM #3

GRADING AND DRAINAGE PLAN ENLARGEMENT

C2.1

01_ORIGINAL ISSUE

E:\Projects\26-0075 RVI - South Park Improvements\05 CAD\26-0075 RVI South Park.dwg 11/11/2026 corey mase

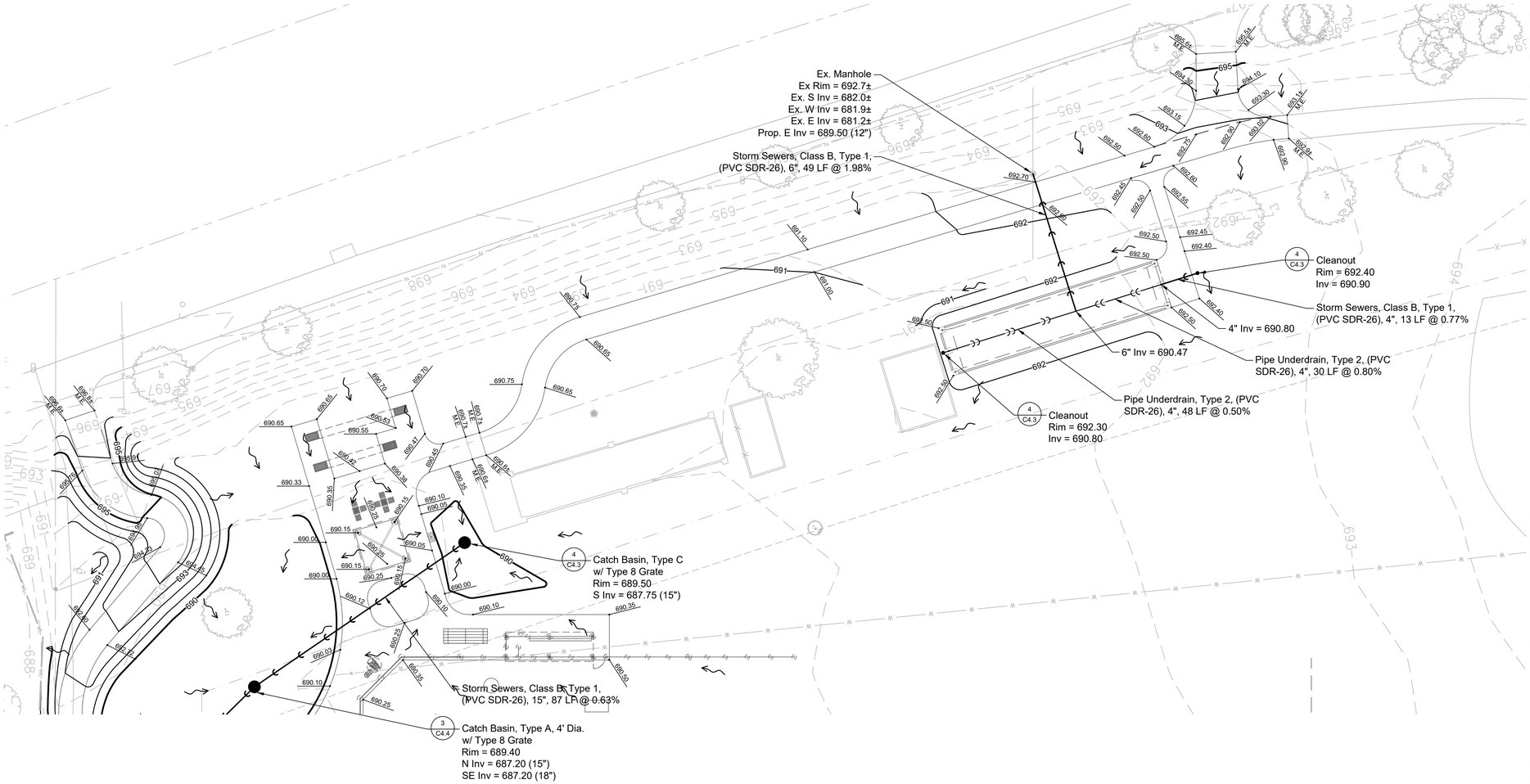

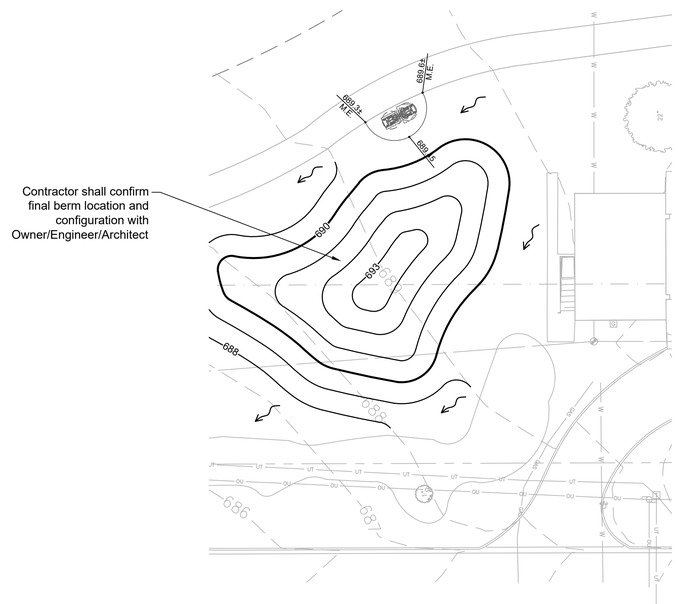

GRADING AND DRAINAGE NOTES

All work done under this heading will be done in accordance with applicable provisions of the "Standard Specifications for Road and Bridge Construction", State of Illinois, Department of Transportation, adopted January 1, 2026, and revisions thereto, the "Standard Specifications for Water and Sewer Construction in Illinois", latest edition, the City of Lake Forest codes and regulations, the project notes and specifications.

1. Work under this section shall include, but not be limited to, the following:
   a. Clearing and removal of all undesirable vegetative growth within the construction area except as noted otherwise on the plans.
   b. Removing unsuitable materials as specified from paved and playground areas and other designated areas.
   c. Clay cut and clay fill with compaction within paved and playground areas and other designated areas.
   d. Excavation and grading of the entire site per plan, including construction of berms, swales, etc., as shown on these plans.
   e. Placement and construction of structural and non-structural fills.
   f. If required, removal from site and disposal of any excess or unsuitable material upon completion of mass grading.
   g. Movement and compaction of spoil material from the construction of underground utilities.
   h. Final shaping and trimming to the lines, grades and cross-sections shown in these plans, and topsoil placement to design finish grade elevations.
   i. Soil erosion control measures in accordance with the applicable specifications and county requirements.
2. Silt fence and perimeter erosion barrier as shown in the construction plans shall be erected prior to mass earthwork.
3. It is the Contractor's responsibility to determine all material quantities and apprise themself of all site conditions. No claims for extra work will be recognized unless ordered in writing by the Owner.
4. The grading operations are to be closely supervised and inspected, particularly during the removal of unsuitable material and the construction of embankments, by the geotechnical engineer or his representative. All testing, inspection and supervision of soil quality, unsuitable removal and its replacement, and other soils related operations shall be entirely the responsibility of the geotechnical engineer.
5. The grading and construction of the site improvements shall not cause ponding of stormwater except as noted on the plans. All areas adjacent to these improvements shall be graded to allow positive drainage.
6. The proposed grading elevations shown on the plans are finish grade unless otherwise noted. A minimum of six inches (6") of topsoil is to be placed before finish grade elevations are achieved, except where noted otherwise. Topsoil depth shall be increased as needed if on-site earth fill is not available and for construction of berms.
7. It is anticipated that topsoil and earth cuts and fills will balance on-site with no import or export needed. The Contractor shall notify the Owner and/or Engineer should it be determined prior to or during construction that the earthwork will not balance.
8. All disturbed areas to be restored according to the planting plan.
9. All disturbed areas shall be stabilized with NA Green S75 erosion control blanket, or approved equal, unless otherwise noted.
10. The Contractor is to locate all utilities, public and private, prior to beginning construction. Contractor will be responsible for any damages to utilities caused by their work. Contact J.U.L.I.E. 72 hours prior to construction at 1-800-982-0123 or (811) for location of utilities and contractor shall be responsible for protection of the same.
11. The Contractor shall notify the Architect or Engineer if existing utility lines of any nature are encountered that conflict in location with new construction so that the conflict may be resolved.
12. The Contractor shall be responsible for the protection of all public and private utilities even though they may not be shown on the plans. Any utility damaged during construction shall be repaired or replaced to the satisfaction of the Owner and the Contractor's expense.
13. The Contractor shall be required to make arrangements for the proper bracing, shoring and other required protection of all roadways, structures, poles, cables and pipe lines before construction begins. He shall be responsible for any damage to the streets or roadways and associated structures and shall make repairs as necessary to the satisfaction of the Owner at his own expense.
14. The Contractor shall confirm the location (horizontal and vertical) of all utility pipes and structures to which a new connection is being made prior to constructing the new pipe. He shall notify the Architect or Engineer should any discrepancy be found between the location shown on the plans and the location determined in the field.

GRADING LEGEND

- Ex Wetland Boundary
- Ex Major Contour (5 foot)
- Ex Minor Contour (1 foot)
- Prop Major Contour (5 foot)
- Prop Minor Contour (1 foot)
- Prop Storm Sewer
- Prop Storm Underdrain
- Spot Elevation
- Top of Curb Spot Elevation
- Match Existing
- Drainage Arrow
- Prop Cleanout
- Prop Catch Basin
- Prop Storm Manhole
- Prop Flared End Section

0 10' 20' 40'
SCALE: 1" = 20'-0"

RVi
22 East Chicago Avenue
Suite 200a
Naperville, IL 60540
Tel: 312.634.2100
www.rvlplanning.com

PREPARED FOR
CITY OF LAKE FOREST
800 N. FIELD DRIVE
LAKE FOREST, ILLINOIS 60045

CONSULTANTS

CIVIL ENGINEER
HEY AND ASSOCIATES, INC.
26575 W. COMMERCE DRIVE
SUITE 601
VOLO, ILLINOIS 60073
T 847.740.0888

ELECTRICAL ENGINEER
NOVA ENGINEERING, PC
2338 S. CLINE AVENUE
SCHERERVILLE, INDIANA 46375
T 219.865.3352

SOUTH PARK PHASE TWO

ISSUE FOR BID
150 S. MAYWOOD RD.
LAKE FOREST, ILLINOIS 60045

PROJECT NO:	26000793
DATE:	10/28/2026
DRAWN:	BCB/BEG
REVIEWED:	CTM

OCTOBER 28, 2026
REVISIONS:

NO.	DATE	ISSUE
3	11/11/2026	ADDENDUM #3

GRADING AND DRAINAGE PLAN ENLARGEMENTS

C2.2

01_ORIGINAL ISSUE

E:\Projects\26-0075 RVI - South Park Improvements\05 CAD\26-0075 RVI South Park.dwg 11/11/2026 corey mase

Storm Sewers, Class B, Type 1,
(PVC SDR-26), 18", 76 LF @ 0.26%

Cleanout
Rim = 687.00
Inv = 684.33

Metal Flared End Section, 18"
Inv = 687.00

Pipe Underdrain, Type 2, (PVC
SDR-26), 6", 138 LF @ 0.50%

Rain Garden

Curb Outlet

Curb Outlet

Catch Basin, Type C
w/ Type 8 Grate
Rim = 687.00
W Inv = 683.64 (6")
E Inv = 683.64 (12")

Storm Sewers, Class B, Type 1,
(PVC SDR-26), 12", 49 LF @ 0.45%

Manhole, Type A, 4' Dia.
w/ Type 1 Frame CL
Rim = 686.85
W Inv = 683.42 (12")
SE Inv = 683.42 (12")

Storm Sewers, Class B, Type 1,
(PVC SDR-26), 12", 13 LF @ 0.54%

Cleanout
Rim = 684.00
Inv = 681.38

Metal Flared End Section, 12"
Inv = 686.35

Storm Sewers, Class B, Type 1,
(PVC SDR-26), 12", 17 LF @ 0.88%
w/ (2) Metal Flared End Section, 12"
NW Inv = 686.40 (12")
SE Inv = 686.25 (12")

Curb Outlet

Curb Outlet

Pipe Underdrain, Type 2, (PVC
SDR-26), 6", 116 LF @ 0.50%

Rain Garden

Catch Basin, Type C
w/ Type 8 Grate
Rim = 683.75
SW Inv = 680.80 (6")
NE Inv = 680.80 (12")

Storm Sewers, Class B, Type 1,
(PVC SDR-26), 12", 26 LF @ 0.58%

Ex. Manhole
Ex Rim = 684.5±
Ex. NE Inv = 671.0± (10")
Ex. N Inv = 670.1± (15")
Ex. S Inv = 670.1± (15")
Prop. SW Inv = 680.65 (12")

Match existing grades
approximately 20' beyond infield

Ex. Manhole
Ex. Rim = 684.2±
Adjust Rim Elevation
Prop. Rim = 684.60
Replace Closed Lid w/ Open Grade

Ex. Manhole
Ex. Rim = 685.2±
Adjust Rim Elevation
Prop. Rim = 684.85
Replace Frame and Lid w/
Type 11 Frame & Grate

Ex. Inlet
Ex. Rim = 683.5±
Adjust Rim Elevation
Prop. Rim = 683.75
Replace Frame and Grate
w/ Type 1 Frame OL

S. Maywood Road

GRADING LEGEND

- Ex Wetland Boundary
- Ex Major Contour (5 foot)
- Ex Minor Contour (1 foot)
- Prop Major Contour (5 foot)
- Prop Minor Contour (1 foot)
- Prop Storm Sewer
- Prop Storm Underdrain
- Spot Elevation
- Top of Curb Spot Elevation
- Match Existing
- Drainage Arrow
- Prop Cleanout
- Prop Catch Basin
- Prop Storm Manhole
- Prop Flared End Section

GRADING AND DRAINAGE NOTES

All work done under this heading will be done in accordance with applicable provisions of the "Standard Specifications for Road and Bridge Construction", State of Illinois, Department of Transportation, adopted January 1, 2026, and revisions thereto, the "Standard Specifications for Water and Sewer Construction in Illinois", latest edition, the City of Lake Forest codes and regulations, the project notes and specifications.

1. Work under this section shall include, but not be limited to, the following:
   a. Clearing and removal of all undesirable vegetative growth within the construction area except as noted otherwise on the plans.
   b. Removing unsuitable materials as specified from paved and playground areas and other designated areas.
   c. Clay cut and clay fill with compaction within paved and playground areas and other designated areas.
   d. Excavation and grading of the entire site per plan, including construction of berms, swales, etc., as shown on these plans.
   e. Placement and construction of structural and non-structural fills.
   f. If required, removal from site and disposal of any excess or unsuitable material upon completion of mass grading.
   g. Movement and compaction of spoil material from the construction of underground utilities.
   h. Final shaping and trimming to the lines, grades and cross-sections shown in these plans, and topsoil placement to design finish grade elevations.
   i. Soil erosion control measures in accordance with the applicable specifications and county requirements.
2. Silt fence and perimeter erosion barrier as shown in the construction plans shall be erected prior to mass earthwork.
3. It is the Contractor's responsibility to determine all material quantities and apprise themself of all site conditions. No claims for extra work will be recognized unless ordered in writing by the Owner.
4. The grading operations are to be closely supervised and inspected, particularly during the removal of unsuitable material and the construction of embankments, by the geotechnical engineer or his representative. All testing, inspection and supervision of soil quality, unsuitable removal and its replacement, and other soils related operations shall be entirely the responsibility of the geotechnical engineer.
5. The grading and construction of the site improvements shall not cause ponding of stormwater except as noted on the plans. All areas adjacent to these improvements shall be graded to allow positive drainage.
6. The proposed grading elevations shown on the plans are finish grade unless otherwise noted. A minimum of six inches (6") of topsoil is to be placed before finish grade elevations are achieved, except where noted otherwise. Topsoil depth shall be increased as needed if on-site earth fill is not available and for construction of berms.
7. It is anticipated that topsoil and earth cuts and fills will balance on-site with no import or export needed. The Contractor shall notify the Owner and/or Engineer should it be determined prior to or during construction that the earthwork will not balance.
8. All disturbed areas to be restored according to the planting plan.
9. All disturbed areas shall be stabilized with NA Green S75 erosion control blanket, or approved equal, unless otherwise noted.
10. The Contractor is to locate all utilities, public and private, prior to beginning construction. Contractor will be responsible for any damages to utilities caused by their work. Contact J.U.L.I.E. 72 hours prior to construction at 1-800-982-0123 or (811) for location of utilities and contractor shall be responsible for protection of the same.
11. The Contractor shall notify the Architect or Engineer if existing utility lines of any nature are encountered that conflict in location with new construction so that the conflict may be resolved.
12. The Contractor shall be responsible for the protection of all public and private utilities even though they may not be shown on the plans. Any utility damaged during construction shall be repaired or replaced to the satisfaction of the Owner and the Contractor's expense.
13. The Contractor shall be required to make arrangements for the proper bracing, shoring and other required protection of all roadways, structures, poles, cables and pipe lines before construction begins. He shall be responsible for any damage to the streets or roadways and associated structures and shall make repairs as necessary to the satisfaction of the Owner at his own expense.
14. The Contractor shall confirm the location (horizontal and vertical) of all utility pipes and structures to which a new connection is being made prior to constructing the new pipe. He shall notify the Architect or Engineer should any discrepancy be found between the location shown on the plans and the location determined in the field.

0 10' 20' 40'
SCALE: 1" = 20'-0"

RVi
22 East Chicago Avenue
Suite 200a
Naperville, IL 60540
Tel: 312.634.2100
www.rvlplanning.com

PREPARED FOR
CITY OF LAKE FOREST

800 N. FIELD DRIVE
LAKE FOREST, ILLINOIS 60045

CONSULTANTS

CIVIL ENGINEER
HEY AND ASSOCIATES, INC.
26575 W. COMMERCE DRIVE
SUITE 601
VOLO, ILLINOIS 60073
T 847.740.0888

ELECTRICAL ENGINEER
NOVA ENGINEERING, PC
2338 S. CLINE AVENUE
SCHERERVILLE, INDIANA 46375
T 219.865.3352

SOUTH PARK PHASE TWO

ISSUE FOR BID
150 S. MAYWOOD RD.
LAKE FOREST, ILLINOIS 60045

PROJECT NO:	26000793
DATE:	10/28/2026
DRAWN:	BCB/BEG
REVIEWED:	CTM

OCTOBER 28, 2026
REVISIONS:

NO.	DATE	ISSUE
3	11/11/2026	ADDENDUM #3

GRADING AND DRAINAGE PLAN ENLARGEMENT

C2.3

01_ORIGINAL ISSUE

E:\Projects\26-0075 RVI - South Park Improvements\05 CAD\26-0075 RVI South Park.dwg 11/11/2026 corey mase



UTILITY NOTES

1. All utility construction shall be in accordance with the "Standard Specifications for Road and Bridge Construction", State of Illinois, Department of Transportation, latest edition, and revisions thereto, the "Standard Specifications for Water and Sewer Construction in Illinois", latest edition, the Village of Wauconda codes and regulations, the project notes and specifications.
2. The Contractor is to locate all utilities, public and private, prior to beginning construction. Contractor will be responsible for any damages to utilities caused by their work. Contact J.U.L.I.E. 72 hours prior to construction at 1-800-982-0123 or (811) for location of utilities and contractor shall be responsible for protection of the same.
3. The Contractor shall notify the Architect or Engineer if existing utility lines of any nature are encountered that conflict in location with new construction so that the conflict may be resolved.
4. The Contractor shall be responsible for the protection of all public and private utilities even though they may not be shown on the plans. Any utility damaged during construction shall be repaired or replaced to the satisfaction of the Owner and the Contractor's expense.
5. The Contractor shall be required to make arrangements for the proper bracing, shoring and other required protection of all roadways, structures, poles, cables and pipe lines before construction begins. Contractor shall be responsible for any damage to the streets or roadways and associated structures and shall make repairs as necessary to the satisfaction of the Owner at his own expense.
6. The Contractor shall confirm the horizontal and vertical locations of all existing utility pipes prior to constructing the new utility pipes. Contractor shall notify the Architect or Engineer should any discrepancy be found between the location shown on the plans and the location determined in the field or if any proposed pipes will be in conflict with any utilities not indicated on the plans.
7. All water piping shall have a minimum depth of cover of 5-1/2 feet.
8. A minimum of 10 feet of horizontal separation shall be provided between water main/service pipes and sewer pipes, except at crossings. Where water and sewer pipes cross, the invert of the water pipe shall be a minimum of 18 inches above the top of the sewer pipe. If the water pipe cannot be installed as described above while maintaining a minimum depth of 5-1/2 feet, vertical separation according to Detail 4 on Sheet C4.3 shall be provided.
9. Water main protection, where required at utility crossings, shall be provided by using water main quality pipe for the sewer pipe to 10' each side of the crossing or by providing water main quality casing over the water service to 10' each side of the crossing.
10. The Contractor shall confirm the location of the existing water service at the connection points prior to installing any new water service piping. The Contractor shall notify the Architect or Engineer if the existing water main location indicated on the plans does not match the field conditions.

UTILITY LEGEND

- Ex Wetland Boundary
- Ex Major Contour (5 foot)
- Ex Minor Contour (1 foot)
- Prop Major Contour (5 foot)
- Prop Minor Contour (1 foot)
- Existing Sanitary Sewer
- Existing Water Service
- Proposed Storm Sewer
- Proposed Water Service
- Prop Cleanout
- Prop Catch Basin
- Prop Storm Manhole
- Prop Flared End Section
- Proposed Valve & Box

0 30' 60' 120'
SCALE: 1" = 60'-0"

RVi
22 East Chicago Avenue
Suite 200a
Naperville, IL 60540
Tel: 312.634.2100
www.rvilanning.com

PREPARED FOR
CITY OF LAKE FOREST

800 N. FIELD DRIVE
LAKE FOREST, ILLINOIS 60045

CONSULTANTS

CIVIL ENGINEER
HEY AND ASSOCIATES, INC.
26575 W. COMMERCE DRIVE
SUITE 601
VOLO, ILLINOIS 60073
T 847.740.0888

ELECTRICAL ENGINEER
NOVA ENGINEERING, PC
2338 S. CLINE AVENUE
SCHERERVILLE, INDIANA 46375
T 219.865.3352

SOUTH PARK PHASE TWO

ISSUE FOR BID
150 S. MAYWOOD RD.
LAKE FOREST, ILLINOIS 60045

PROJECT NO:	26000793
DATE:	10/28/2026
DRAWN:	BCB/BEG
REVIEWED:	CTM

OCTOBER 28, 2026
REVISIONS:

NO.	DATE	ISSUE
3	11/11/2026	ADDENDUM #3

UTILITY PLAN OVERALL

C3.0

01_ORIGINAL ISSUE

E:\Projects\26-0075.RVI - South Park Improvements\05 CAD\26-0075 RVi South Park.dwg 11/11/2026 corey mase

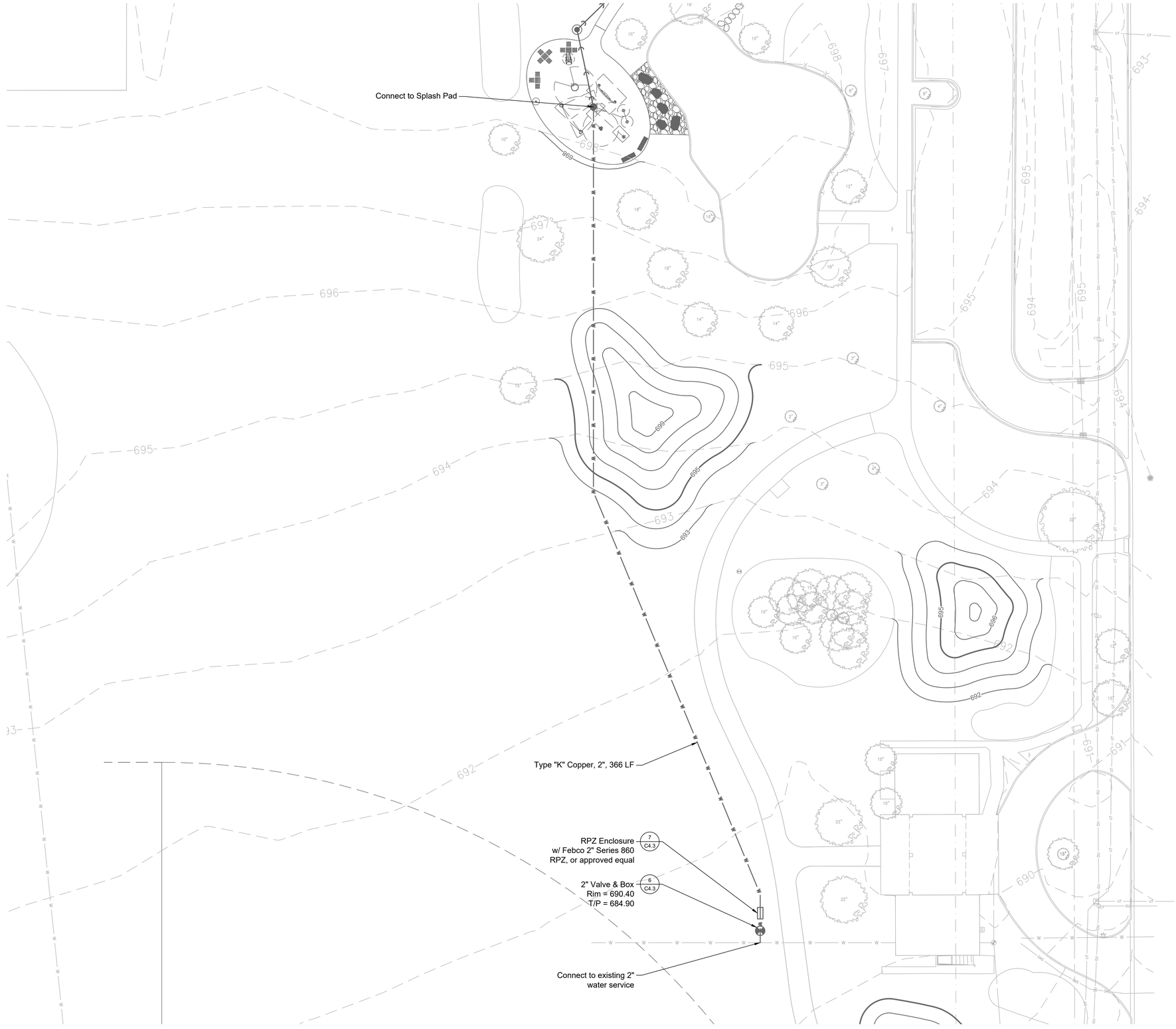

UTILITY NOTES

1. All utility construction shall be in accordance with the "Standard Specifications for Road and Bridge Construction", State of Illinois, Department of Transportation, latest edition, and revisions thereto, the "Standard Specifications for Water and Sewer Construction in Illinois", latest edition, the Village of Wauconda codes and regulations, the project notes and specifications.
2. The Contractor is to locate all utilities, public and private, prior to beginning construction. Contractor will be responsible for any damages to utilities caused by their work. Contact J.U.L.I.E. 72 hours prior to construction at 1-800-982-0123 or (811) for location of utilities and contractor shall be responsible for protection of the same.
3. The Contractor shall notify the Architect or Engineer if existing utility lines of any nature are encountered that conflict in location with new construction so that the conflict may be resolved.
4. The Contractor shall be responsible for the protection of all public and private utilities even though they may not be shown on the plans. Any utility damaged during construction shall be repaired or replaced to the satisfaction of the Owner and the Contractor's expense.
5. The Contractor shall be required to make arrangements for the proper bracing, shoring and other required protection of all roadways, structures, poles, cables and pipe lines before construction begins. Contractor shall be responsible for any damage to the streets or roadways and associated structures and shall make repairs as necessary to the satisfaction of the Owner at his own expense.
6. The Contractor shall confirm the horizontal and vertical locations of all existing utility pipes prior to constructing the new utility pipes. Contractor shall notify the Architect or Engineer should any discrepancy be found between the location shown on the plans and the location determined in the field or if any proposed pipes will be in conflict with any utilities not indicated on the plans.
7. All water piping shall have a minimum depth of cover of 5-1/2 feet.
8. A minimum of 10 feet of horizontal separation shall be provided between water main/service pipes and sewer pipes, except at crossings. Where water and sewer pipes cross, the invert of the water pipe shall be a minimum of 18 inches above the top of the sewer pipe. If the water pipe cannot be installed as described above while maintaining a minimum depth of 5-1/2 feet, vertical separation according to Detail 4 on Sheet C4.3 shall be provided.
9. Water main protection, where required at utility crossings, shall be provided by using water main quality pipe for the sewer pipe to 10' each side of the crossing or by providing water main quality casing over the water service to 10' each side of the crossing.
10. The Contractor shall confirm the location of the existing water service at the connection points prior to installing any new water service piping. The Contractor shall notify the Architect or Engineer if the existing water main location indicated on the plans does not match the field conditions.

UTILITY LEGEND

- Ex Wetland Boundary
- Ex Major Contour (5 foot)
- Ex Minor Contour (1 foot)
- Prop Major Contour (5 foot)
- Prop Minor Contour (1 foot)
- Existing Sanitary Sewer
- Existing Water Service
- Proposed Storm Sewer
- Proposed Water Service
- Prop Cleanout
- Prop Catch Basin
- Prop Storm Manhole
- Prop Flared End Section
- Proposed Valve & Box

0 10' 20' 40'
SCALE: 1" = 20'-0"

RVi
22 East Chicago Avenue
Suite 200a
Naperville, IL 60540
Tel: 312.634.2100
www.rviplanning.com

PREPARED FOR
CITY OF LAKE FOREST

800 N. FIELD DRIVE
LAKE FOREST, ILLINOIS 60045

CONSULTANTS

CIVIL ENGINEER
HEY AND ASSOCIATES, INC.
26575 W. COMMERCE DRIVE
SUITE 601
VOLO, ILLINOIS 60073
T 847.740.0888

ELECTRICAL ENGINEER
NOVA ENGINEERING, PC
2338 S. CLINE AVENUE
SCHERERVILLE, INDIANA 46375
T 219.865.3352

SOUTH PARK PHASE TWO

ISSUE FOR BIDDING

150 S. MAYWOOD RD.
LAKE FOREST, ILLINOIS 60045

PROJECT NO:	26000793
DATE:	10/28/2026
DRAWN:	BCB/BEG
REVIEWED:	CTM

OCTOBER 28, 2026
REVISIONS:

NO.	DATE	ISSUE
3	11/11/2026	ADDENDUM #3

UTILITY PLAN ENLARGEMENT

C3.1

01_ORIGINAL ISSUE

E:\Projects\26-0075.RVI - South Park Improvements\05.CAD\26-0075.RVI.South Park.dwg 11/11/2026 corey mase

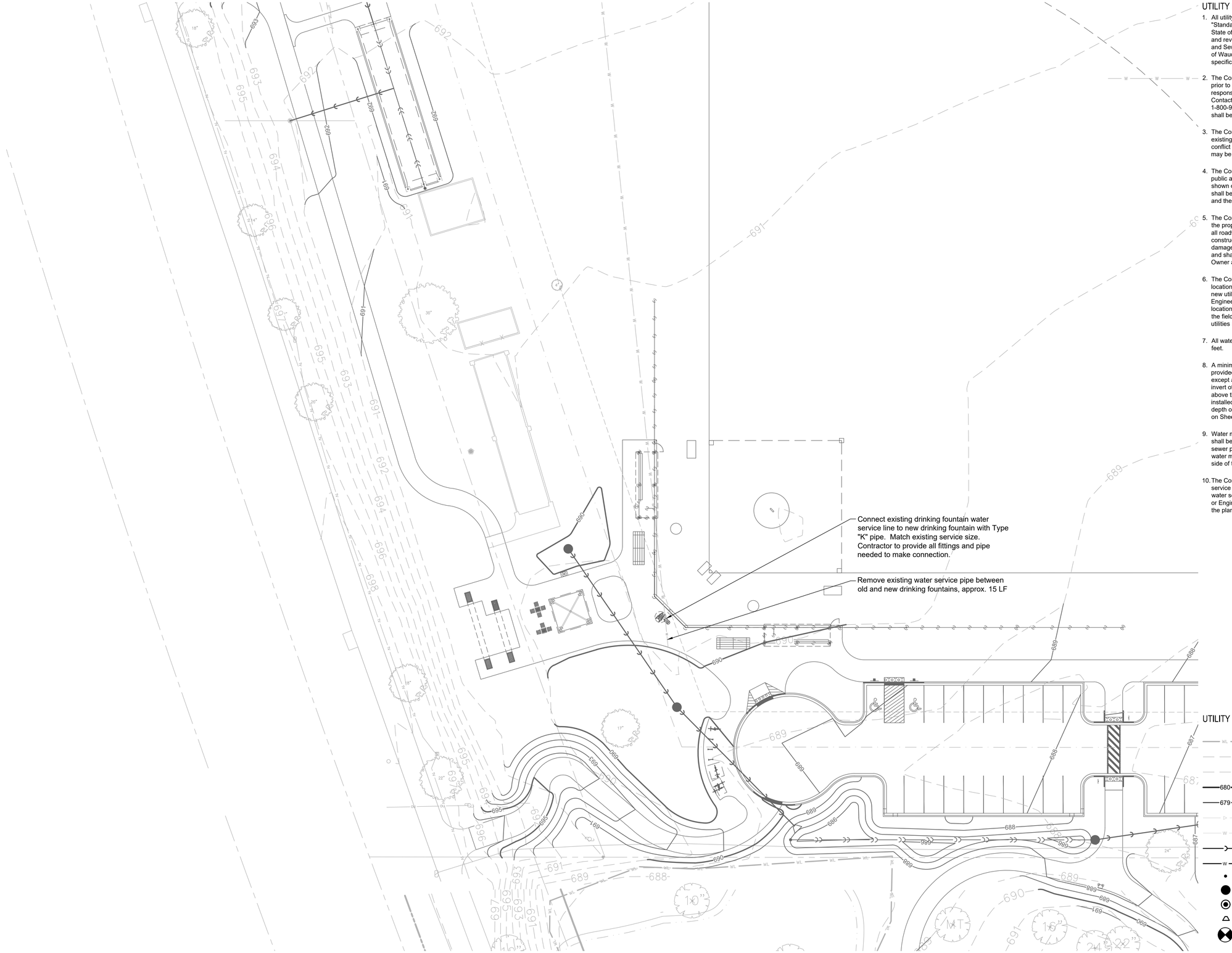

UTILITY NOTES

1. All utility construction shall be in accordance with the "Standard Specifications for Road and Bridge Construction", State of Illinois, Department of Transportation, latest edition, and revisions thereto, the "Standard Specifications for Water and Sewer Construction in Illinois", latest edition, the Village of Wauconda codes and regulations, the project notes and specifications.
2. The Contractor is to locate all utilities, public and private, prior to beginning construction. Contractor will be responsible for any damages to utilities caused by their work. Contact J.U.L.I.E. 72 hours prior to construction at 1-800-982-0123 or (811) for location of utilities and contractor shall be responsible for protection of the same.
3. The Contractor shall notify the Architect or Engineer if existing utility lines of any nature are encountered that conflict in location with new construction so that the conflict may be resolved.
4. The Contractor shall be responsible for the protection of all public and private utilities even though they may not be shown on the plans. Any utility damaged during construction shall be repaired or replaced to the satisfaction of the Owner and the Contractor's expense.
5. The Contractor shall be required to make arrangements for the proper bracing, shoring and other required protection of all roadways, structures, poles, cables and pipe lines before construction begins. Contractor shall be responsible for any damage to the streets or roadways and associated structures and shall make repairs as necessary to the satisfaction of the Owner at his own expense.
6. The Contractor shall confirm the horizontal and vertical locations of all existing utility pipes prior to constructing the new utility pipes. Contractor shall notify the Architect or Engineer should any discrepancy be found between the location shown on the plans and the location determined in the field or if any proposed pipes will be in conflict with any utilities not indicated on the plans.
7. All water piping shall have a minimum depth of cover of 5-1/2 feet.
8. A minimum of 10 feet of horizontal separation shall be provided between water main/service pipes and sewer pipes, except at crossings. Where water and sewer pipes cross, the invert of the water pipe shall be a minimum of 18 inches above the top of the sewer pipe. If the water pipe cannot be installed as described above while maintaining a minimum depth of 5-1/2 feet, vertical separation according to Detail 4 on Sheet C4.3 shall be provided.
9. Water main protection, where required at utility crossings, shall be provided by using water main quality pipe for the sewer pipe to 10' each side of the crossing or by providing water main quality casing over the water service to 10' each side of the crossing.
10. The Contractor shall confirm the location of the existing water service at the connection points prior to installing any new water service piping. The Contractor shall notify the Architect or Engineer if the existing water main location indicated on the plans does not match the field conditions.

UTILITY LEGEND

- Ex Wetland Boundary
- Ex Major Contour (5 foot)
- Ex Minor Contour (1 foot)
- Prop Major Contour (5 foot)
- Prop Minor Contour (1 foot)
- Existing Sanitary Sewer
- Existing Water Service
- Proposed Storm Sewer
- Proposed Water Service
- Prop Cleanout
- Prop Catch Basin
- Prop Storm Manhole
- Prop Flared End Section
- Proposed Valve & Box

0 10' 20' 40'
SCALE: 1" = 20'-0"

RVi
22 East Chicago Avenue
Suite 200a
Naperville, IL 60540
Tel: 312.634.2100
www.rviplanning.com

PREPARED FOR
CITY OF LAKE FOREST

800 N. FIELD DRIVE
LAKE FOREST, ILLINOIS 60045

CONSULTANTS

CIVIL ENGINEER
HEY AND ASSOCIATES, INC.
26575 W. COMMERCE DRIVE
SUITE 601
VOLO, ILLINOIS 60073
T 847.740.0888

ELECTRICAL ENGINEER
NOVA ENGINEERING, PC
2338 S. CLINE AVENUE
SCHERERVILLE, INDIANA 46375
T 219.865.3352

SOUTH PARK PHASE TWO

ISSUE FOR BID
150 S. MAYWOOD RD.
LAKE FOREST, ILLINOIS 60045

PROJECT NO:	26000793
DATE:	10/28/2026
DRAWN:	BCB/BEG
REVIEWED:	CTM

OCTOBER 28, 2026
REVISIONS:

NO.	DATE	ISSUE
3	11/11/2026	ADDENDUM #3

UTILITY PLAN ENLARGEMENT

C3.2

01_ORIGINAL ISSUE

E:\Projects\26-0075 RVI - South Park Improvements\05 CAD\26-0075 RVI South Park.dwg 11/11/2026 corey mase

ROLLED EROSION CONTROL PRODUCTS

STAKING PATTERN GUIDE

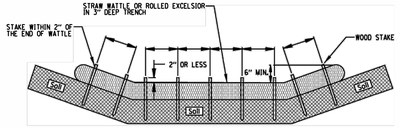

NOTES:
1. OVERLAP MINIMUM IS THE DIAMETER OF THE ROLL.
2. 4" SPACING FOR WATTLES.
3. 2" SPACING FOR ROLLED EXCELSIOR.
4. OR SPACE ACCORDING TO MANUFACTURER'S SPECIFICATIONS.

STAKE DETAIL

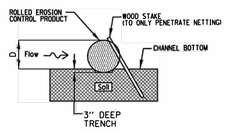

NOTES:
1. DRAWINGS ARE NOT TO SCALE.
2. ENDS OF WATTLES OR ROLLED EXCELSIOR SHALL BE TURNED AT LEAST 6" UPSLOPE.
3. RECOMMENDED STAKES ARE 1 1/8" WIDE x 1 1/8" THICK x 30" LONG.
4. STAKES SHALL NOT EXTEND ABOVE THE STRAW WATTLE MORE THAN 2".
5. SPACING THE TOE OF THE UPSTREAM DITCH CHECK SHALL CREATE A HORIZONTAL LINE WITH THE TOP OF THE DOWNSTREAM DITCH CHECK.

REFERENCE		STANDARD DWG. NO.
Project		IUM-514
Designed ____ Date ____		SHEET 1 OF 1
Checked ____ Date ____		DATE 08-2-2019
Approved ____ Date ____		

1 Perimeter Erosion Barrier Detail (Not to Scale)

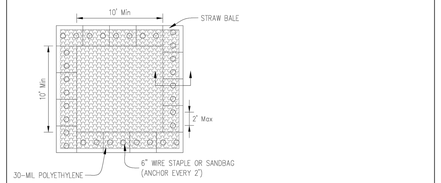

NOTES:
1. Maintaining temporary concrete washout facilities shall include removing and disposing of hardend concrete and/or slurry and returning the facilities to a functional condition.
2. Facility shall be cleaned or reconstructed in a new area once washout becomes two-thirds full.
3. Each straw bale is to be staked in place using (2) 2"x2"x4' wooden stakes.

TEMPORARY CONCRETE WASHOUT FACILITY – STRAW BALE

2 Temporary Concrete Washout Detail (Not to Scale)

EROSION CONTROL BLANKET – TURF REINFORCEMENT MAT (TRM)

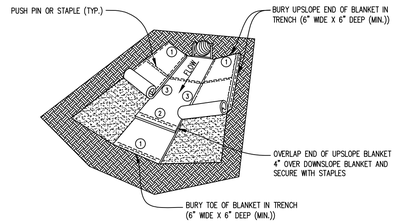

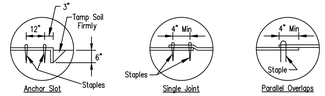

DETAIL 1 DETAIL 2 DETAIL 3

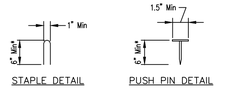

STAPLE DETAIL PUSH PIN DETAIL

*Note:
1. For sandy soil conditions, staple or push pin shall be a minimum 8 inches.

REFERENCE		STANDARD DWG. NO.
Project		IUM-531
Designed ____ Date ____		SHEET 1 OF 1
Checked ____ Date ____		DATE 02-22-11
Approved ____ Date ____		

3 Erosion Control Blanket & Turf Reinforcement Mat (TRM) Detail (Not to Scale)

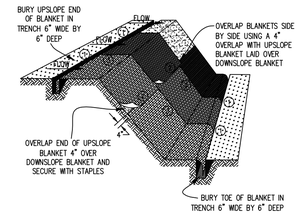

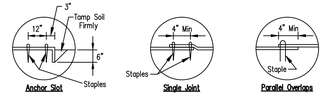

DETAIL 1 DETAIL 2 DETAIL 3



STAPLE DETAIL PUSH PIN DETAIL

NOTES:
1. Staples shall be placed in a diamond pattern at 2 per s.y. for stiched blankets. Non-stiched shall use 4 staples per s.y. of material. This equates to 200 staples with stiched blanket and 400 stapels with non-stiched blanket per 100 s.y. of material.
2. Staple or push pin lengths shall be selected based on soil type and conditions. (minimum staple length is 6")
3. Erosion control material shall be placed in contact with the soil over a prepared seedbed.
4. All anchor slots shall be stapled at approximately 12" intervals.

IUM-530	EROSION CONTROL BLANKET INSTALLATION DETAILS	Designed ____ Date ____
		Drawn B. JOHNSON ____ JOHN...
		Checked ____
		Approved ____

4 Erosion Control Blanket Detail (Not to Scale)

INLET PROTECTION – PAVED AREAS
DROP-IN PROTECTION

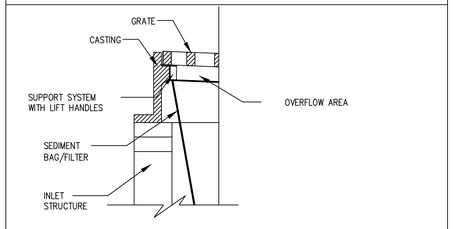

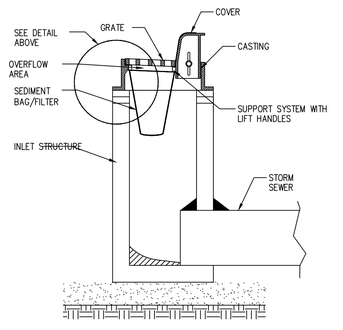

REFERENCE		STANDARD DWG. NO.
Project		IUM-561D
Designed ____ Date ____		SHEET 1 OF 1
Checked ____ Date ____		DATE 01-11-11
Approved ____ Date ____		

5 Inlet Protection (Paved Surfaces) Detail (Not to Scale)

MANUFACTURED ABOVE GRADE INLET PROTECTION

NOT TO SCALE

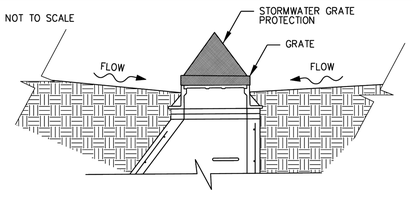

SECTION

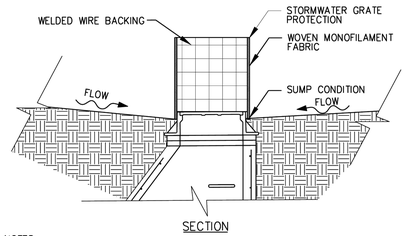

SECTION

NOTES:
1. A maintenance schedule must maintain a sediment accumulation of less than 50% of the height of the inlet protection.
2. Device should be supported.
3. Fabric type should be IUM 592 Standard Table 1 Class 4.

REFERENCE		STANDARD DWG. NO.
Project		IUM-531
Designed ____ Date ____		SHEET 1 OF 1
Checked ____ Date ____		DATE 03-27-2017
Approved ____ Date ____		

6 Inlet Protection (Unpaved Surfaces) Detail (Not to Scale)

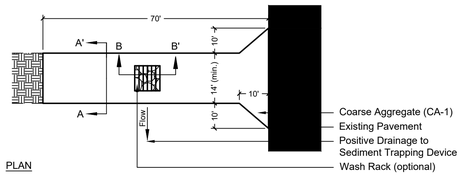

PLAN

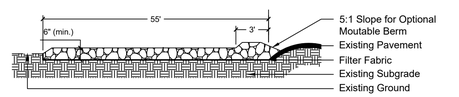

SIDE ELEVATION

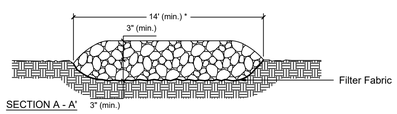

SECTION A - A' 3" (min.)

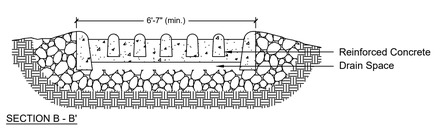

SECTION B - B'

Notes:
1. Filter fabric shall meet the requirements of the specifications and shall be placed over the cleared area prior to the placing of rock.
2. Rock or reclaimed concrete shall meet coarse aggregate gradation CA-1 and be placed according to the standard specifications.
3. Any drainage facilities required because of washing shall be construced according to manufacturer's specifications.
4. If wash racks are used they shall be installed according to the manufacturer's specifications.
* Must extend full width of ingress and egress operation.

7 Stabilized Construction Entrance Detail (If Needed) (Not to Scale)

RVi
22 East Chicago Avenue
Suite 200a
Naperville, IL 60540
Tel: 312.634.2100
www.rvilanning.com

PREPARED FOR
CITY OF LAKE FOREST

800 N. FIELD DRIVE
LAKE FOREST, ILLINOIS 60045

CONSULTANTS

CIVIL ENGINEER
HEY AND ASSOCIATES, INC.
26575 W. COMMERCE DRIVE
SUITE 601
VOLO, ILLINOIS 60073
T 847.740.0888

ELECTRICAL ENGINEER
NOVA ENGINEERING, PC
2338 S. CLINE AVENUE
SCHERERVILLE, INDIANA 46375
T 219.865.3352

SOUTH PARK PHASE TWO

ISSUE FOR BID
150 S. MAYWOOD RD.
LAKE FOREST, ILLINOIS 60045

PROJECT NO: 26000793
DATE: 10/28/2026
DRAWN: BCB/BEG
REVIEWED: CTM

OCTOBER 28, 2026
REVISIONS:

NO.	DATE	ISSUE
3	11/11/2026	ADDENDUM #3

CIVIL DETAILS

C4.0

01_ORIGINAL ISSUE

E:\Projects\26-0075 RVI - South Park Improvements\05 CAD\26-0075 RVI South Park.dwg 11/11/2026 corey mase

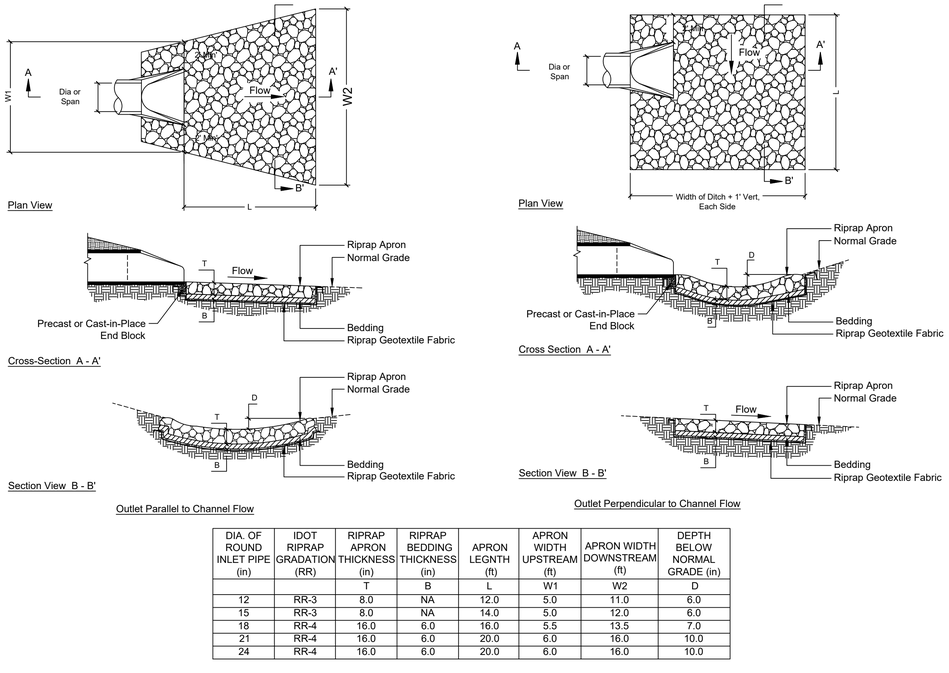

DIA. OF ROUND INLET PIPE (in)	IDOT RIPRAP GRADATION (RR)	RIPRAP APRON THICKNESS (in)	RIPRAP BEDDING THICKNESS (in)	APRON LEGNTH (ft)	APRON WIDTH UPSTREAM (ft)	APRON WIDTH DOWNSTREAM (ft)	DEPTH BELOW NORMAL GRADE (in)
		T	B	L	W1	W2	D
12	RR-3	8.0	NA	12.0	5.0	11.0	6.0
15	RR-3	8.0	NA	14.0	5.0	12.0	6.0
18	RR-4	16.0	6.0	16.0	5.5	13.5	7.0
21	RR-4	16.0	6.0	20.0	6.0	16.0	10.0
24	RR-4	16.0	6.0	20.0	6.0	16.0	10.0

1 Rock Outlet Protection Detail (Not to Scale)

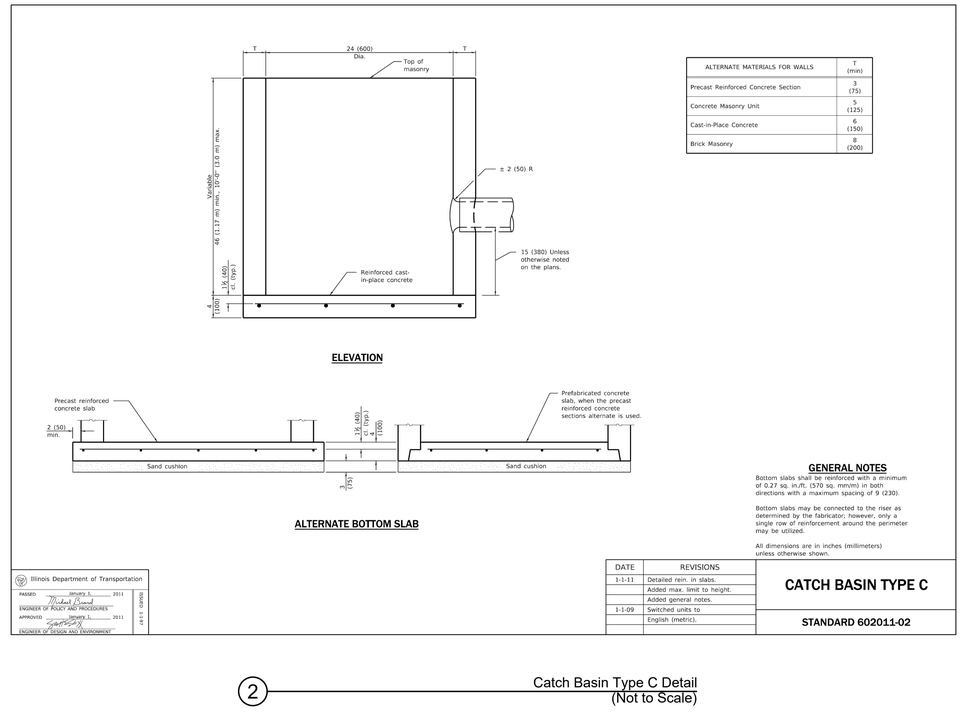

ALTERNATE MATERIALS FOR WALLS	T (min)
Precast Reinforced Concrete Section	3 (75)
Concrete Masonry Unit	5 (125)
Cast-in-Place Concrete	6 (150)
Brick Masonry	8 (200)

ELEVATION

ALTERNATE BOTTOM SLAB

GENERAL NOTES

Bottom slabs shall be reinforced with a minimum of 0.27 sq. in./ft. (570 sq. mm/m) in both directions with a maximum spacing of 9 (230).

Bottom slabs may be connected to the riser as determined by the fabricator; however, only a single row of reinforcement around the perimeter may be utilized.

All dimensions are in inches (millimeters) unless otherwise shown.

Illinois Department of Transportation
PASSED January 5, 2011 — ENGINEER OF POLICY AND PROCEDURES
APPROVED January 5, 2011 — ENGINEER OF DESIGN AND ENVIRONMENT
BSDDCP 1181

DATE	REVISIONS
1-1-11	Detailed rein. in slabs.
	Added max. limit to height.
	Added general notes.
1-1-09	Switched units to
	English (metric).

CATCH BASIN TYPE C

STANDARD 602011-02

2 Catch Basin Type C Detail (Not to Scale)

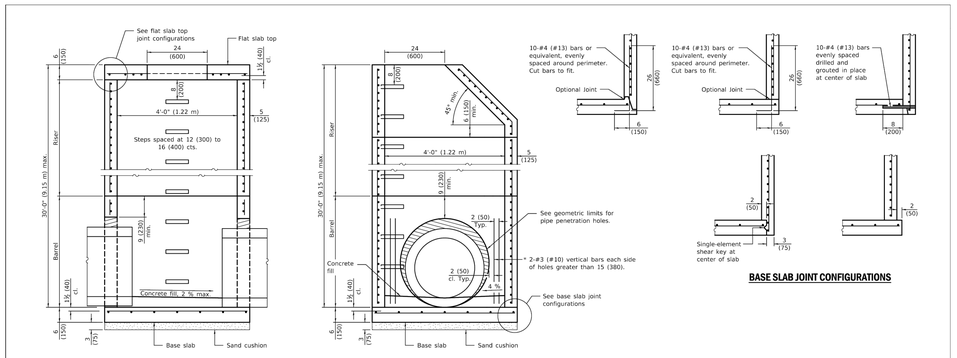

SECTION PARALLEL TO PIPE
(Without conical top riser)

SECTION PERPENDICULAR TO PIPE
(With conical top riser)

* As an alternate, the barrel wall reinforcement may be reduced to riser wall reinforcement with #3 (#10) bars placed around the pipe penetration holes as shown. This option may be utilized when the pipe penetration holes are formed as opposed to cored.

BASE SLAB JOINT CONFIGURATIONS

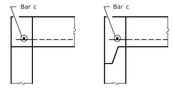

FLAT SLAB TOP JOINT CONFIGURATIONS
(Shown at access hole)

GEOMETRIC LIMITS FOR PIPE PENETRATION HOLES

1. A minimum of 9 (230) of monolithic reinforced concrete shall be maintained above pipe penetration holes > 24 (600).
2. A minimum 12 (300) inside arc length of reinforced concrete shall be maintained between pipe penetration holes > 15 (380).
3. A maximum of 60 percent of the inside perimeter of the reinforced concrete manhole walls may be removed.
4. Horizontal joints that intersect pipe penetration holes > 15 (380) shall have one joint splice for every location around the perimeter of the joint where the inside arc length between pipe penetration holes is < 24 (600). See joint splice detail.
5. The recommended pipe penetration hole is equal to the O.D. of the pipe plus 4 (100).
6. Only pipe penetration holes ≤ 15 (380) are allowed in riser sections.

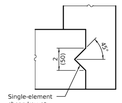

SHEAR KEY GEOMETRY
(Reinforcement not shown for clarity)

GENERAL NOTES

The manufacturer shall ensure that all precast manhole sections are additionally reinforced where required to resist damage from handling, shipping and installation stresses.

Lifting holes shall be located in the sections as per the manufacturer's recommendations, except as noted.

See Standard 602701 for details of manhole steps.

All dimensions are in inches (millimeters) unless otherwise noted.

Illinois Department of Transportation
PASSED March 5, 2019 — ENGINEER OF POLICY AND PROCEDURES
APPROVED March 5, 2019 — ENGINEER OF DESIGN AND ENVIRONMENT
BSDDCP 1181

DATE	REVISIONS
3-1-19	Moved wall reinforcement from
	inside face to middle.
1-1-19	Expanded / refined reinforcement
	options. Increased manhole depths.

PRECAST MANHOLE TYPE A 4' (1.22 m) DIAMETER
(Sheet 1 of 2)

STANDARD 602401-06

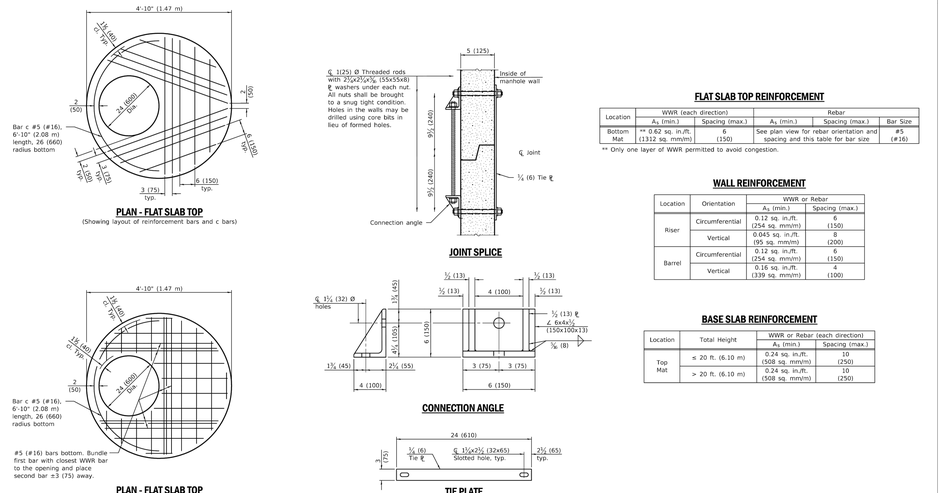

PLAN - FLAT SLAB TOP
(Showing layout of reinforcement bars and c bars)

JOINT SPLICE

PLAN - FLAT SLAB TOP
(Showing layout of welded wire reinforcement and c bars)

CONNECTION ANGLE

TIE PLATE

FLAT SLAB TOP REINFORCEMENT

Location	WWR (each direction)		Rebar		
	A_s (min.)	Spacing (max.)	A_s (min.)	Spacing (max.)	Bar Size
Bottom Mat	** 0.62 sq. in./ft. (1312 sq. mm/m)	6 (150)	See plan view for rebar orientation and spacing and this table for bar size		#5 (#16)

** Only one layer of WWR permitted to avoid congestion.

WALL REINFORCEMENT

Location	Orientation	WWR or Rebar	
		A_s (min.)	Spacing (max.)
Riser	Circumferential	0.12 sq. in./ft. (254 sq. mm/m)	6 (150)
	Vertical	0.045 sq. in./ft. (95 sq. mm/m)	8 (200)
Barrel	Circumferential	0.12 sq. in./ft. (254 sq. mm/m)	6 (150)
	Vertical	0.16 sq. in./ft. (339 sq. mm/m)	4 (100)

BASE SLAB REINFORCEMENT

Location	Total Height	WWR or Rebar (each direction)	
		A_s (min.)	Spacing (max.)
Top Mat	≤ 20 ft. (6.10 m)	0.24 sq. in./ft. (508 sq. mm/m)	10 (250)
	> 20 ft. (6.10 m)	0.24 sq. in./ft. (508 sq. mm/m)	10 (250)

Illinois Department of Transportation
PASSED March 5, 2019 — ENGINEER OF POLICY AND PROCEDURES
APPROVED March 5, 2019 — ENGINEER OF DESIGN AND ENVIRONMENT
BSDDCP 1181

PRECAST MANHOLE TYPE A 4' (1.22 m) DIAMETER
(Sheet 2 of 2)

STANDARD 602401-06

3 Precast Manhole Type A 4' Diameter Detail (Not to Scale)

RVi
22 East Chicago Avenue
Suite 200a
Naperville, IL 60540
Tel: 312.634.2100
www.rviplanning.com

PREPARED FOR
CITY OF LAKE FOREST

800 N. FIELD DRIVE
LAKE FOREST, ILLINOIS 60045

CONSULTANTS

CIVIL ENGINEER
HEY AND ASSOCIATES, INC.
26575 W. COMMERCE DRIVE
SUITE 601
VOLO, ILLINOIS 60073
T 847.740.0888

ELECTRICAL ENGINEER
NOVA ENGINEERING, PC
2338 S. CLINE AVENUE
SCHERERVILLE, INDIANA 46375
T 219.865.3352

SOUTH PARK PHASE TWO

ISSUE FOR BID
150 S. MAYWOOD RD.
LAKE FOREST, ILLINOIS 60045

PROJECT NO: 26000793
DATE: 10/28/2026
DRAWN: BCB/BEG
REVIEWED: CTM

OCTOBER 28, 2026
REVISIONS:

NO.	DATE	ISSUE
3	11/11/2026	ADDENDUM #3

CIVIL DETAILS

C4.1

01_ORIGINAL ISSUE

E:\Projects\26-0075 RVI - South Park Improvements\05 CAD\26-0075 RVI South Park.dwg 11/11/2026 corey mase

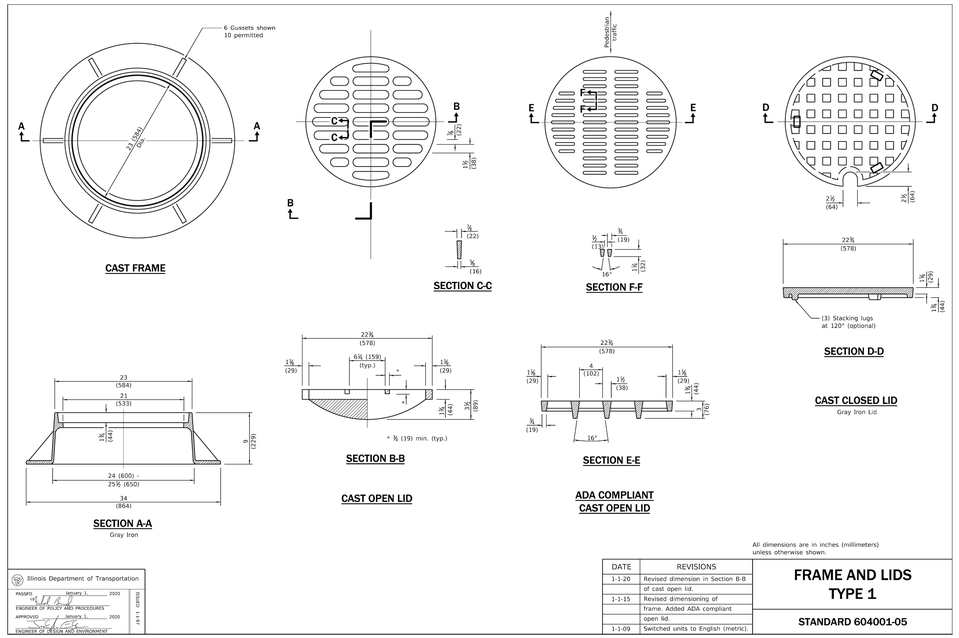

Illinois Department of Transportation
PASSED January 1, 2020 — ENGINEER OF POLICY AND PROCEDURES
APPROVED January 1, 2020 — ENGINEER OF DESIGN AND ENVIRONMENT
DISKS 1 EA

DATE	REVISIONS
1-1-20	Revised dimension in Section B-B of cast open lid.
1-1-15	Revised dimensioning of frame. Added ADA compliant open lid.
1-1-09	Switched units to English (metric).

FRAME AND LIDS TYPE 1

STANDARD 604001-05

1 Frame and Lids Type 1 Detail (Not to Scale)

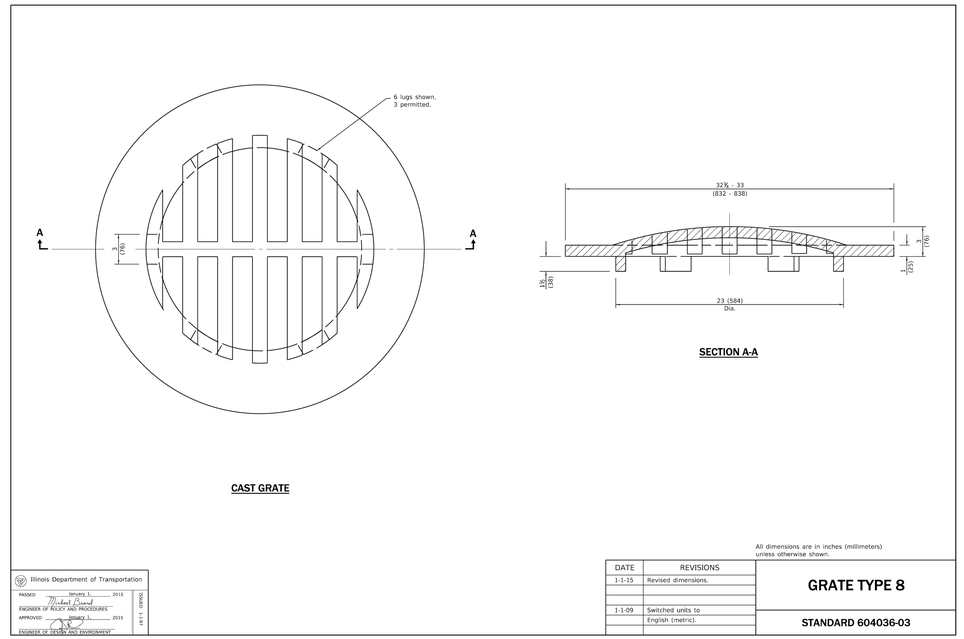

Illinois Department of Transportation
PASSED January 1, 2015 — ENGINEER OF POLICY AND PROCEDURES
APPROVED January 1, 2015 — ENGINEER OF DESIGN AND ENVIRONMENT
DISKS 1 EA

DATE	REVISIONS
1-1-15	Revised dimensions.
1-1-09	Switched units to English (metric).

GRATE TYPE 8

STANDARD 604036-03

2 Grate Type 8 Detail (Not to Scale)

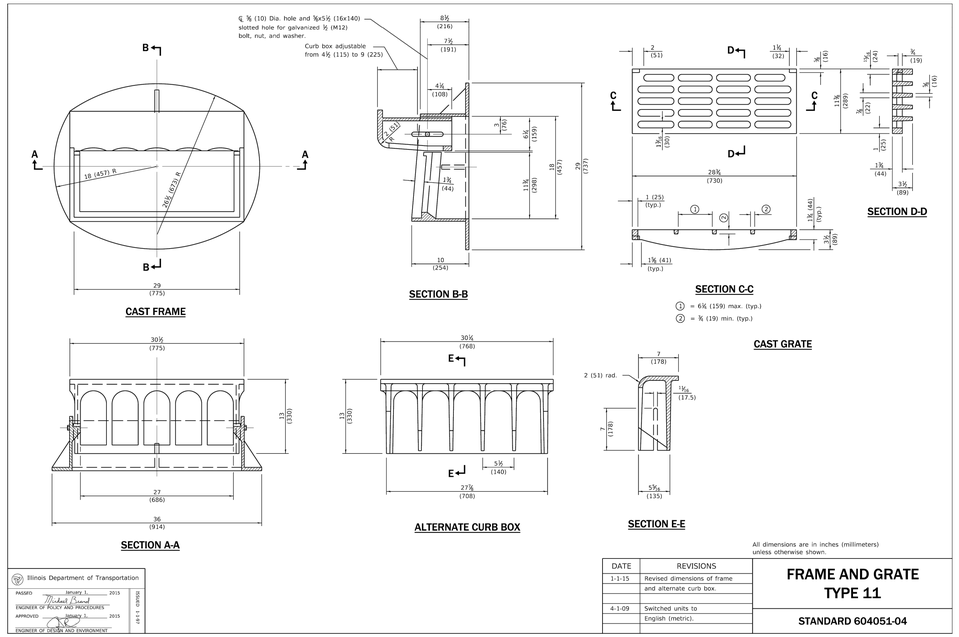

Illinois Department of Transportation
PASSED January 1, 2015 — ENGINEER OF POLICY AND PROCEDURES
APPROVED January 1, 2015 — ENGINEER OF DESIGN AND ENVIRONMENT
DISKS 1 EA

DATE	REVISIONS
1-1-15	Revised dimensions of frame and alternate curb box.
4-1-09	Switched units to English (metric).

FRAME AND GRATE TYPE 11

STANDARD 604051-04

3 Frame and Grate Type 11 Detail (Not to Scale)

PIPE DIA.	THICK-NESS	DIMENSIONS A ± (25)	B (max.)	H ± (25)	L ± (38)	W ± (50)	SLOPE (Approx.) (V:H)	BODY
12 (300)	0.064 (1.63)	6 (150)	6 (150)	6 (150)	21 (535)	24 (610)	1:2½	1 Pc.
15 (375)	0.064 (1.63)	7 (180)	8 (205)	6 (150)	26 (660)	30 (760)	1:2½	1 Pc.
18 (450)	0.064 (1.63)	8 (205)	10 (255)	6 (150)	31 (785)	36 (915)	1:2½	1 Pc.
21 (525)	0.064 (1.63)	9 (230)	12 (305)	6 (150)	36 (915)	42 (1.065 m)	1:2½	1 Pc.
24 (600)	0.064 (1.63)	10 (255)	13 (330)	6 (150)	41 (1.040 m)	48 (1.220 m)	1:2½	1 Pc.
30 (750)	0.079 (2.01)	12 (305)	16 (405)	8 (205)	51 (1.295 m)	60 (1.525 m)	1:2½	1 Pc.
36 (900)	0.079 (2.01)	14 (355)	19 (480)	9 (230)	60 (1.525 m)	72 (1.830 m)	1:2½	2 Pc.
42 (1050)	0.109 (2.77)	16 (405)	22 (560)	11 (280)	69 (1.750 m)	84 (2.135 m)	1:2½	2 Pc.
48 (1200)	0.109 (2.77)	18 (455)	27 (685)	12 (305)	78 (1.980 m)	90 (2.285 m)	1:2¾	2 Pc.
54 (1350)	0.109 (2.77)	18 (455)	30 (760)	12 (305)	84 (2.135 m)	102 (2.590 m)	1:2	2 Pc.
60 (1500)	0.109 (2.77)	18 (455)	33 (840)	12 (305)	87 (2.210 m)	114 (2.895 m)	1:1¾	3 Pc.
66 (1650)	0.109 (2.77)	18 (455)	36 (915)	12 (305)	87 (2.210 m)	120 (3.050 m)	1:1½	3 Pc.
72 (1800)	0.109 (2.77)	18 (455)	39 (990)	12 (305)	87 (2.210 m)	126 (3.200 m)	1:1⅜	3 Pc.
78 (1950)	0.109 (2.77)	18 (455)	42 (1.065 m)	12 (305)	87 (2.210 m)	132 (3.355 m)	1:1¼	3 Pc.
84 (2250)	0.109 (2.77)	18 (455)	45 (1.145 m)	12 (305)	87 (2.210 m)	138 (3.505 m)	1:1⅛	3 Pc.

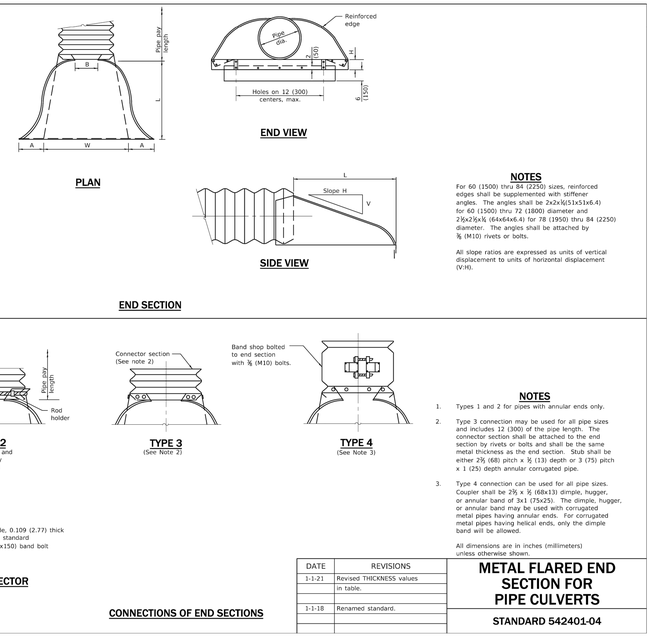

NOTES

For 60 (1500) thru 84 (2250) sizes, reinforced edges shall be supplemented with stiffener angles. The angles shall be 2x2x¼(51x51x6.4) for 60 (1500) thru 72 (1800) diameter and 2½x2½x¾ (64x64x6.4) for 78 (1950) thru 84 (2250) diameter. The angles shall be attached by ⅜ (M10) rivets or bolts.

All slope ratios are expressed as units of vertical displacement to units of horizontal displacement (V:H).

NOTES

1. Types 1 and 2 for pipes with annular ends only.
2. Type 3 connection may be used for all pipe sizes and includes 12 (300) of the pipe length. The connector section shall be attached to the end section by rivets or bolts and shall be the same metal thickness as the end section. Stub shall be either 2⅔ (68) pitch x ½ (13) depth or 3 (75) pitch x 1 (25) depth annular corrugated pipe.
3. Type 4 connection can be used for all pipe sizes. Coupler shall be 2⅔ x ¾ (68x13) dimple, hugger, or annular band of 3x1 (75x25). The dimple, hugger, or annular band may be used with corrugated metal pipes having annular ends. For corrugated metal pipes having helical ends, only the dimple band will be allowed.

All dimensions are in inches (millimeters) unless otherwise shown.

Illinois Department of Transportation
PASSED January 1, 2021 — ENGINEER OF POLICY AND PROCEDURES
APPROVED January 1, 2021 — ENGINEER OF DESIGN AND ENVIRONMENT
DISKS 1 EA

DATE	REVISIONS
1-1-21	Revised THICKNESS values in table.
1-1-18	Renamed standard.

METAL FLARED END SECTION FOR PIPE CULVERTS

STANDARD 542401-04

4 Flared End Section (Not to Scale)

RVi
22 East Chicago Avenue
Suite 200a
Naperville, IL 60540
Tel: 312.634.2100
www.rvilanning.com

PREPARED FOR

CITY OF LAKE FOREST

800 N. FIELD DRIVE
LAKE FOREST, ILLINOIS 60045

CONSULTANTS

CIVIL ENGINEER
HEY AND ASSOCIATES, INC.
26575 W. COMMERCE DRIVE
SUITE 601
VOLO, ILLINOIS 60073
T 847.740.0888

ELECTRICAL ENGINEER
NOVA ENGINEERING, PC
2338 S. CLINE AVENUE
SCHERERVILLE, INDIANA 46375
T 219.865.3352

SOUTH PARK PHASE TWO

ISSUE FOR BID
150 S. MAYWOOD RD.
LAKE FOREST, ILLINOIS 60045

PROJECT NO: 26000793
DATE: 10/28/2026
DRAWN: BCB/BEG
REVIEWED: CTM

OCTOBER 28, 2026

REVISIONS:

NO.	DATE	ISSUE
3	11/11/2026	ADDENDUM #3

CIVIL DETAILS

C4.2

01_ORIGINAL ISSUE

E:\Projects\26-0075 RVI - South Park Improvements\05 CAD\26-0075 RVI South Park.dwg 11/11/2026 corey mase

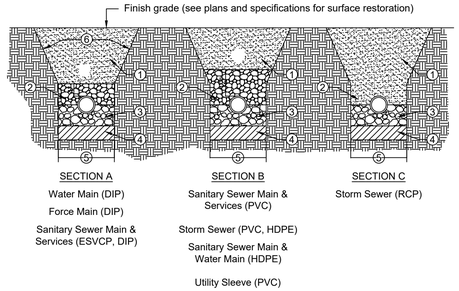

① Trench backfill to subgrade and within 2 feet of proposed pavement, driveway, curb and gutter or sidewalk. Trench backfill materials shalll be IDOT approved gradation:
- FA 1, FA 2, FA 6 or FA 21
- CA 6, CA 10 or CA 18

Compacted to 90% of modified proctor density.
In non-structural areas backfill with approved excavated materials.

② Initial backfill to depth as indicated. Material shall be IDOT approved gradation:
- FA 6
- CA 6, CA 7 or CA 11

③ Pipe bedding shall be fractured granular material IDOT gradation CA-7 or CA-11 from 4 inches below horizontal center of pipe

④ Unsuitable material to be removed where directed by the Engineer and replaced with compacted suitable material.

⑤ Trench Width:
- Pipe O.D. + 12 inches min. (for payment purposes)
- Pipe I.D. + 18 inches max. (for payment purposes)
- Or as noted in Standard Specifications for Water and Sewer Main Construction in Illinois

⑥ Contractors shall comply with the latest OSHA standards including, but not limited to:
- Sloping and benching trenching walls
- Trench support and shoring systems
- Shield sytems and Hazardous atmospheres.

1 Typical Trench Detail (Not to Scale)

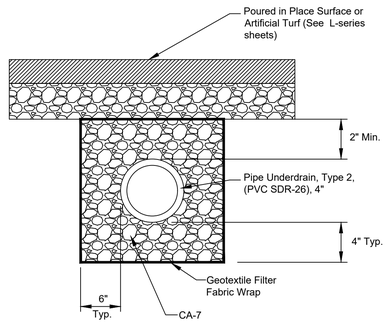

Note:
Underdrain and CA-7 aggregate shall not be installed until upstream areas have been stabilized. Contractor shall prevent sediment and debris from contaminating the CA-7.

2 Pipe Underdrain (PIP Surfacing and Artificial Turf) Detail (Not to Scale)

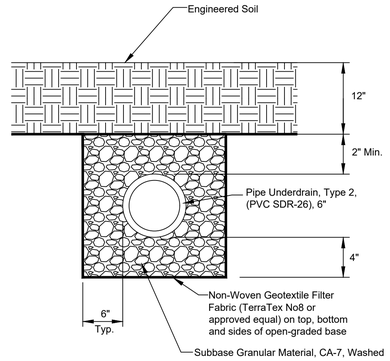

Note:
Engineered soil mix, underdrain and CA-7 aggregate shall not be installed until upstream areas have been stabilized. Contractor shall prevent sediment and debris from contaminating the engineered soil and CA-7.

3 Pipe Underdrain (Rain Garden) Detail (Not to Scale)

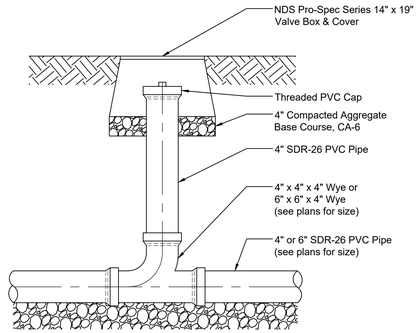

4 Underdrain Cleanout (Not to Scale)

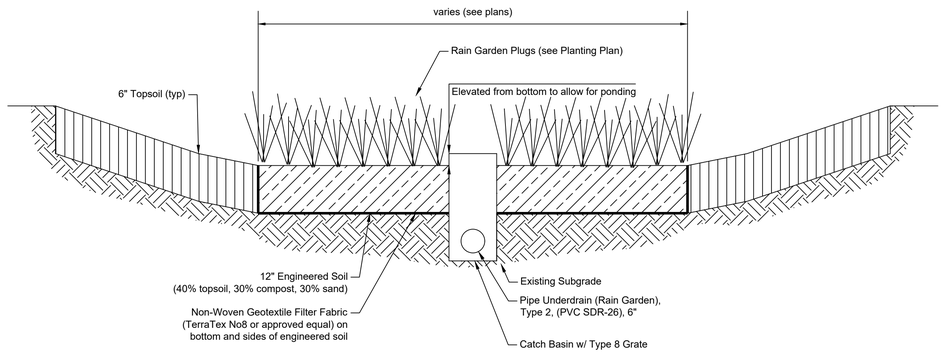

Notes:
1. Contractor shall till or disc subgrade before placing engineered soil in order to promote infiltration.
2. Engineered soil mix, underdrain and CA-7 aggregate shall not be installed until upstream areas have been stabilized. Contractor shall prevent sediment and debris from contaminating the engineered soil and CA-7 .

5 Rain Garden Detail (Not to Scale)

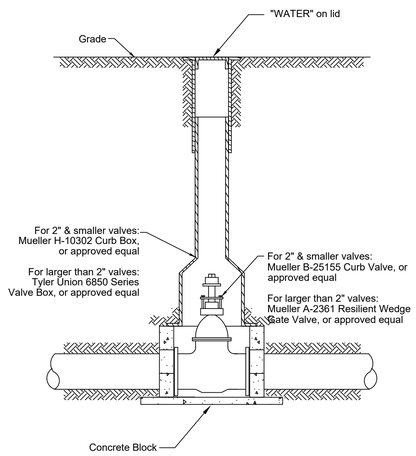

6 Typical Valve Box Installation Detail (Not to Scale)

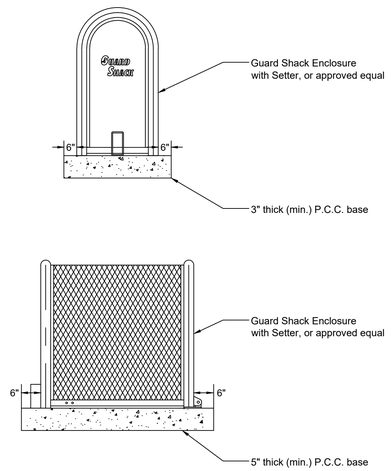

Notes:
1. RPZ enclosure shall be Guard Shack model HGS-3 with ES-3 Setter, or approved equal.
2. Contractor to confirm sizes to fit necessary plumbing.

7 RPZ Enclosure Detail (Not to Scale)

RVi
22 East Chicago Avenue
Suite 200a
Naperville, IL 60540
Tel: 312.634.2100
www.rviplanning.com

PREPARED FOR
CITY OF LAKE FOREST

800 N. FIELD DRIVE
LAKE FOREST, ILLINOIS 60045

CONSULTANTS

CIVIL ENGINEER
HEY AND ASSOCIATES, INC.
26575 W. COMMERCE DRIVE
SUITE 601
VOLO, ILLINOIS 60073
T 847.740.0888

ELECTRICAL ENGINEER
NOVA ENGINEERING, PC
2338 S. CLINE AVENUE
SCHERERVILLE, INDIANA 46375
T 219.865.3352

SOUTH PARK PHASE TWO

ISSUE FOR BID
150 S. MAYWOOD RD.
LAKE FOREST, ILLINOIS 60045

PROJECT NO:	26000793
DATE:	10/28/2026
DRAWN:	BCB/BEG
REVIEWED:	CTM

OCTOBER 28, 2026
REVISIONS:

NO.	DATE	ISSUE
3	11/11/2026	ADDENDUM #3

CIVIL DETAILS

C4.3

01_ORIGINAL ISSUE

E:\Projects\26-0075 RVI - South Park Improvements\05 CAD\26-0075 RVI South Park.dwg 11/11/2026 corey mase

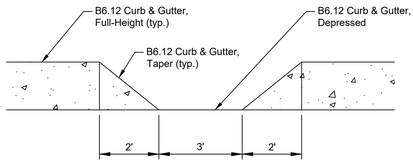

1 Curb Outlet Detail
(Not to Scale)

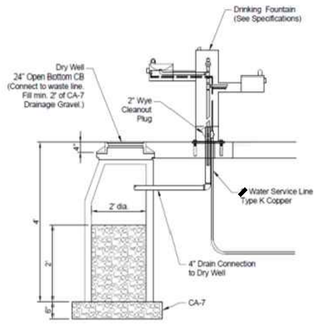

2 Drinking Fountain Drain Detail
(Not to Scale)

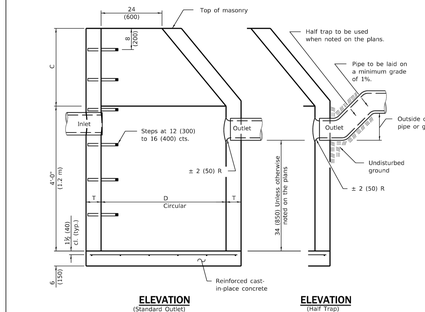

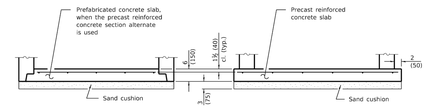

ALTERNATE BOTTOM SLAB

ALTERNATE MATERIALS FOR WALLS	D	C*	T (min.)
Concrete Masonry Unit	4'-0" (1.2 m) 5'-0" (1.5 m)	30 (750) 3'-9" (1.15 m)	5 (125) 5 (125)
Brick Masonry	4'-0" (1.2 m) 5'-0" (1.5 m)	30 (750) 3'-9" (1.15 m)	8 (200) 8 (200)
Precast Reinforced Concrete Section	4'-0" (1.2 m) 5'-0" (1.5 m)	30 (750) 3'-9" (1.15 m)	4 (100) 5 (125)
Cast-in-place Concrete	4'-0" (1.2 m) 5'-0" (1.5 m)	30 (750) 3'-9" (1.15 m)	6 (150) 6 (150)

* For precast reinforced concrete sections, dimension "C" may vary from the dimension given to plus 6 (150).

GENERAL NOTES

Bottom slabs shall be reinforced with a minimum of 0.20 sq. in./ft (420 sq. mm/m) in both directions with a maximum spacing of 12 (300).

Bottom slabs may be connected to the riser as determined by the fabricator; however, only a single row of reinforcement around the perimeter may be utilized.

See Standard 602601 for optional precast reinforced concrete flat slab top.

See Standard 602701 for details of steps.

All dimensions are in inches (millimeters) unless otherwise shown.

Illinois Department of Transportation

PASSED January 1, 2011
ENGINEER OF POLICY AND PROCEDURES

APPROVED January 1, 2011
ENGINEER OF DESIGN AND ENVIRONMENT

BDE 2486

DATE	REVISIONS
1-1-11	Added 'Outside' to half trap note. Detail rein. in slabs.
	Revised general notes.
1-1-09	Switched units to
	English (metric).

CATCH BASIN TYPE A

STANDARD 602001-02

3 Catch Basin Type A Detail
(Not to Scale)

RVi
22 East Chicago Avenue
Suite 200a
Naperville, IL 60540
Tel: 312.634.2100
www.rvilanning.com

PREPARED FOR
CITY OF LAKE FOREST

800 N. FIELD DRIVE
LAKE FOREST, ILLINOIS 60045

CONSULTANTS

CIVIL ENGINEER
HEY AND ASSOCIATES, INC.
26575 W. COMMERCE DRIVE
SUITE 601
VOLO, ILLINOIS 60073
T 847.740.0888

ELECTRICAL ENGINEER
NOVA ENGINEERING, PC
2338 S. CLINE AVENUE
SCHERERVILLE, INDIANA 46375
T 219.865.3352

SOUTH PARK PHASE TWO

ISSUE FOR BID
150 S. MAYWOOD RD.
LAKE FOREST, ILLINOIS 60045

PROJECT NO: 26000793
DATE: 10/28/2026
DRAWN: BCB/BEG
REVIEWED: CTM

OCTOBER 28, 2026
REVISIONS:

NO.	DATE	ISSUE
3	11/11/2026	ADDENDUM #3

CIVIL DETAILS

C4.4

01_ORIGINAL ISSUE

E:\Projects\26-0075 RVI - South Park Improvements\05 CAD\26-0075 RVI South Park.dwg 11/11/2026 corey mase